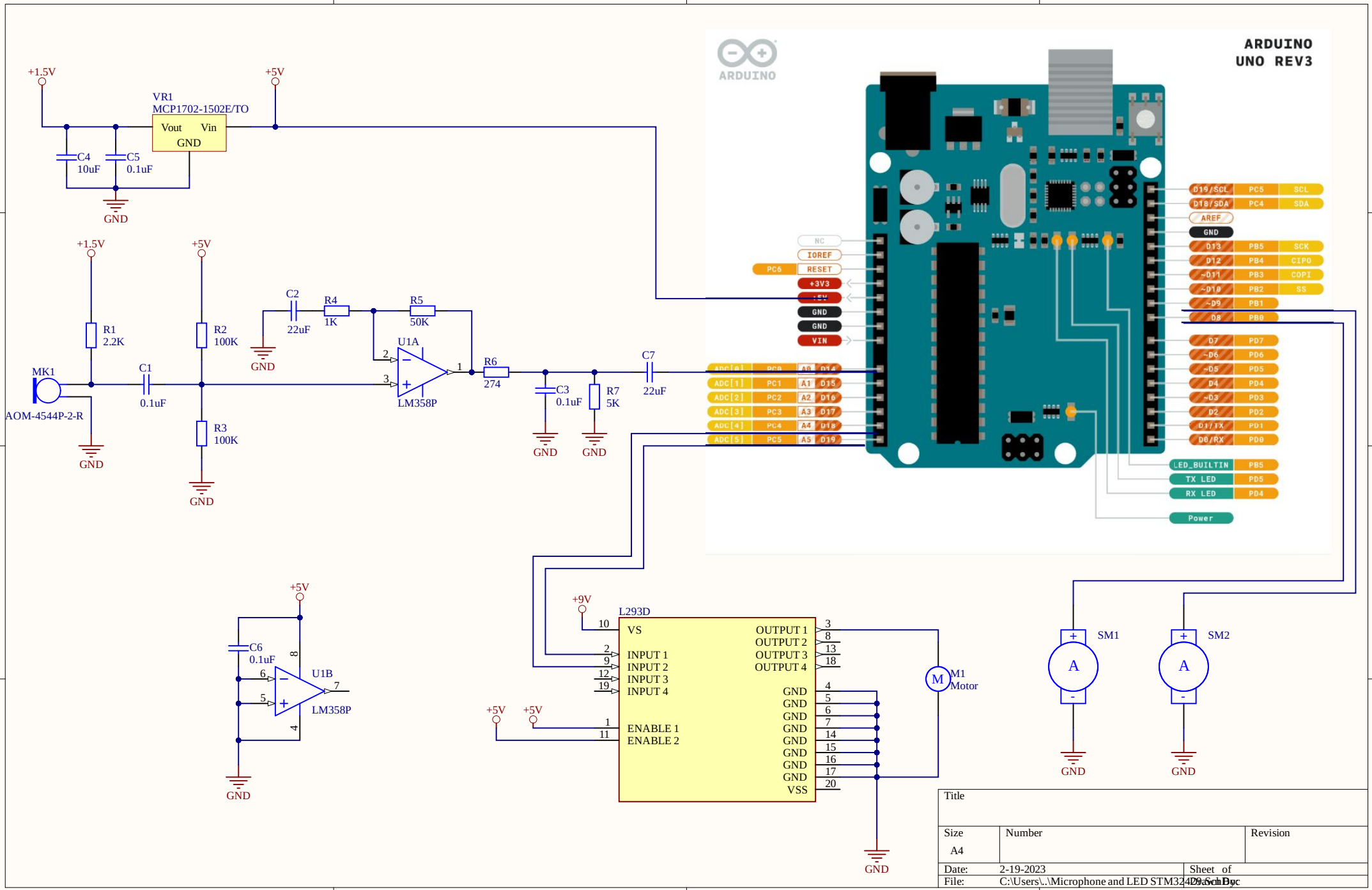
+1.5V
+5V
VR1
MCP1702-1502E/TO
Vout
Vin
GND
C4
10uF
C5
0.1uF
GND
+1.5V
+5V
R1
2.2K
R2
100K
R3
100K
MK1
AOM-4544P-2-R
C1
0.1uF
C2
22uF
R4
1K
R5
50K
U1A
LM358P
R6
274
C3
0.1uF
R7
5K
C7
22uF
GND
ARDUINO
ARDUINO
UNO REV3
NC
IOREF
RESET
+3V3
+5V
GND
GND
VIN
AREF
GND
LED_BUILTIN
TX LED
RX LED
Power
+5V
C6
0.1uF
U1B
LM358P
GND
+9V
L293D
VS
INPUT 1
INPUT 2
INPUT 3
INPUT 4
ENABLE 1
ENABLE 2
OUTPUT 1
OUTPUT 2
OUTPUT 3
OUTPUT 4
GND
VSS
+5V
+5V
M1
Motor
SM1
SM2
A
A
GND
GND
GND
Title
Size
A4
Number
Revision
Date:
2-19-2023
Sheet of
File:
C:\Users\..\Microphone and LED STM32429.SchDoc