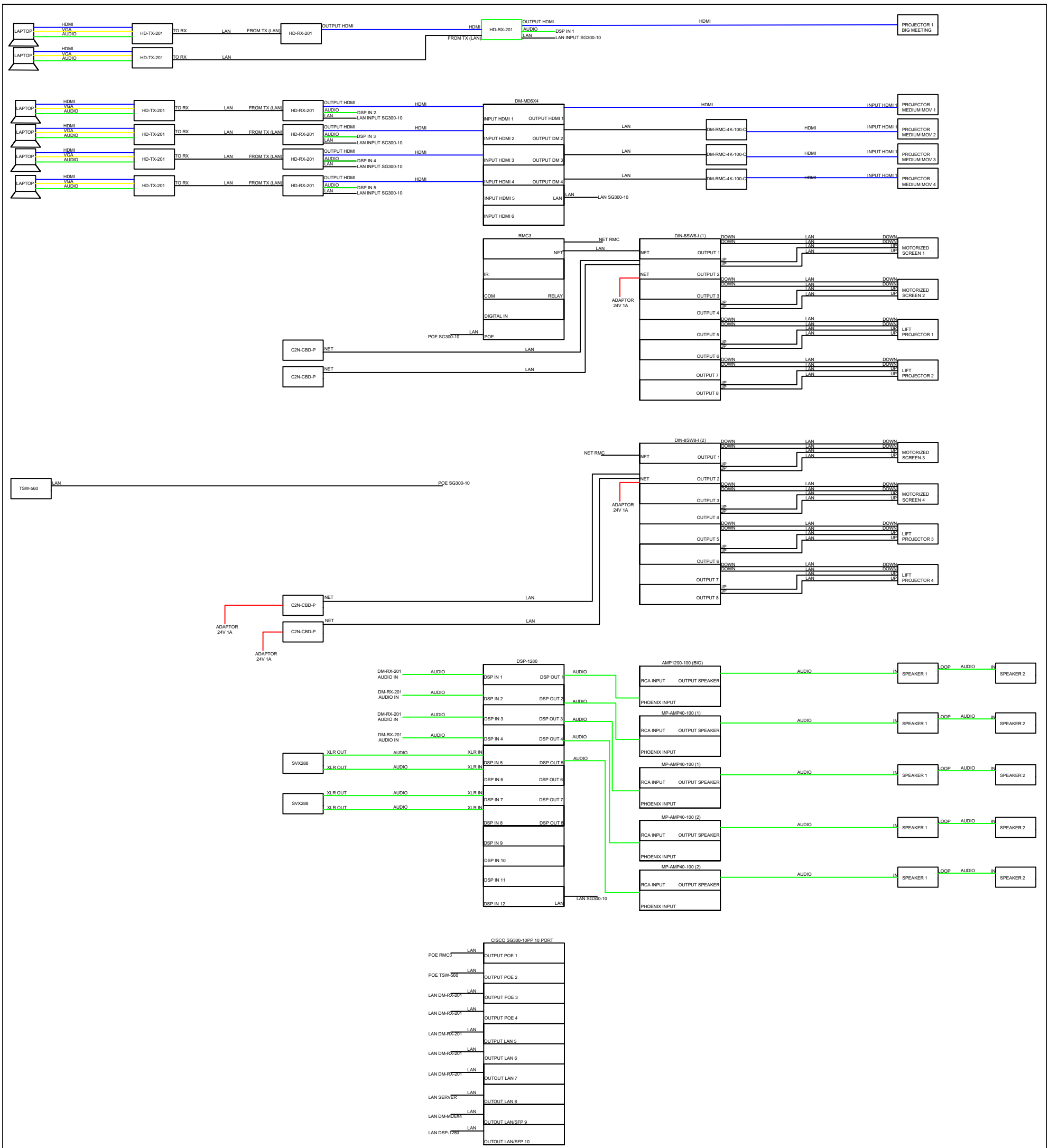

DETAIL SCHEMATIC FLOOR 30 DAN 32 EXIM BANK