1

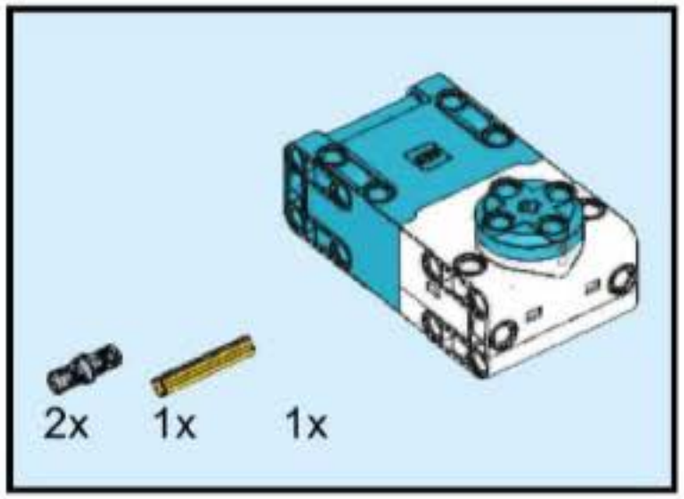

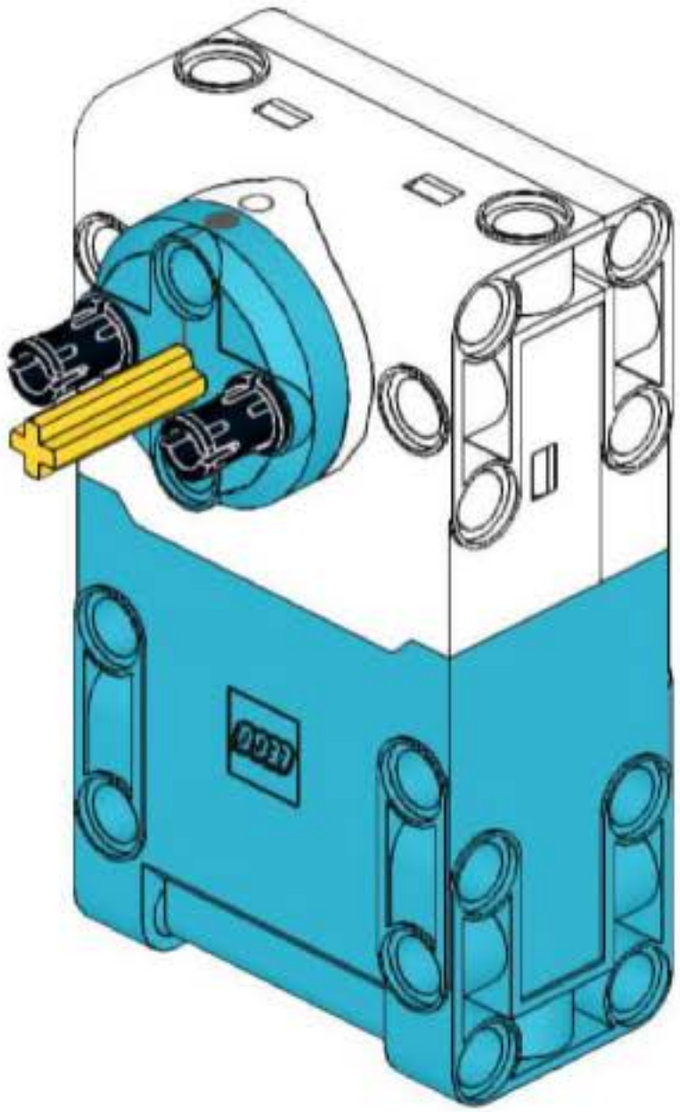

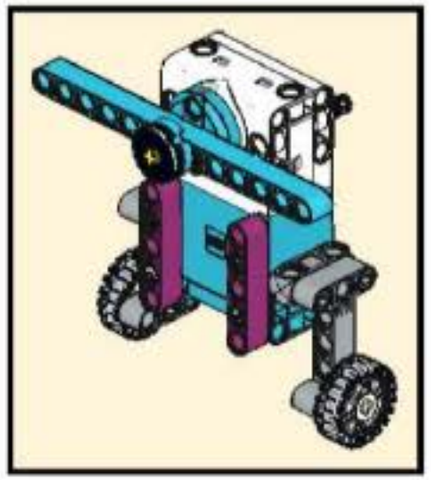

2

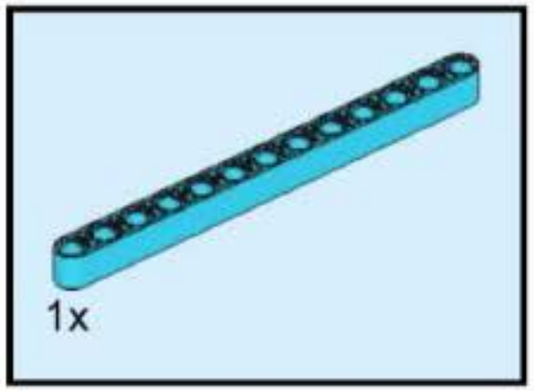

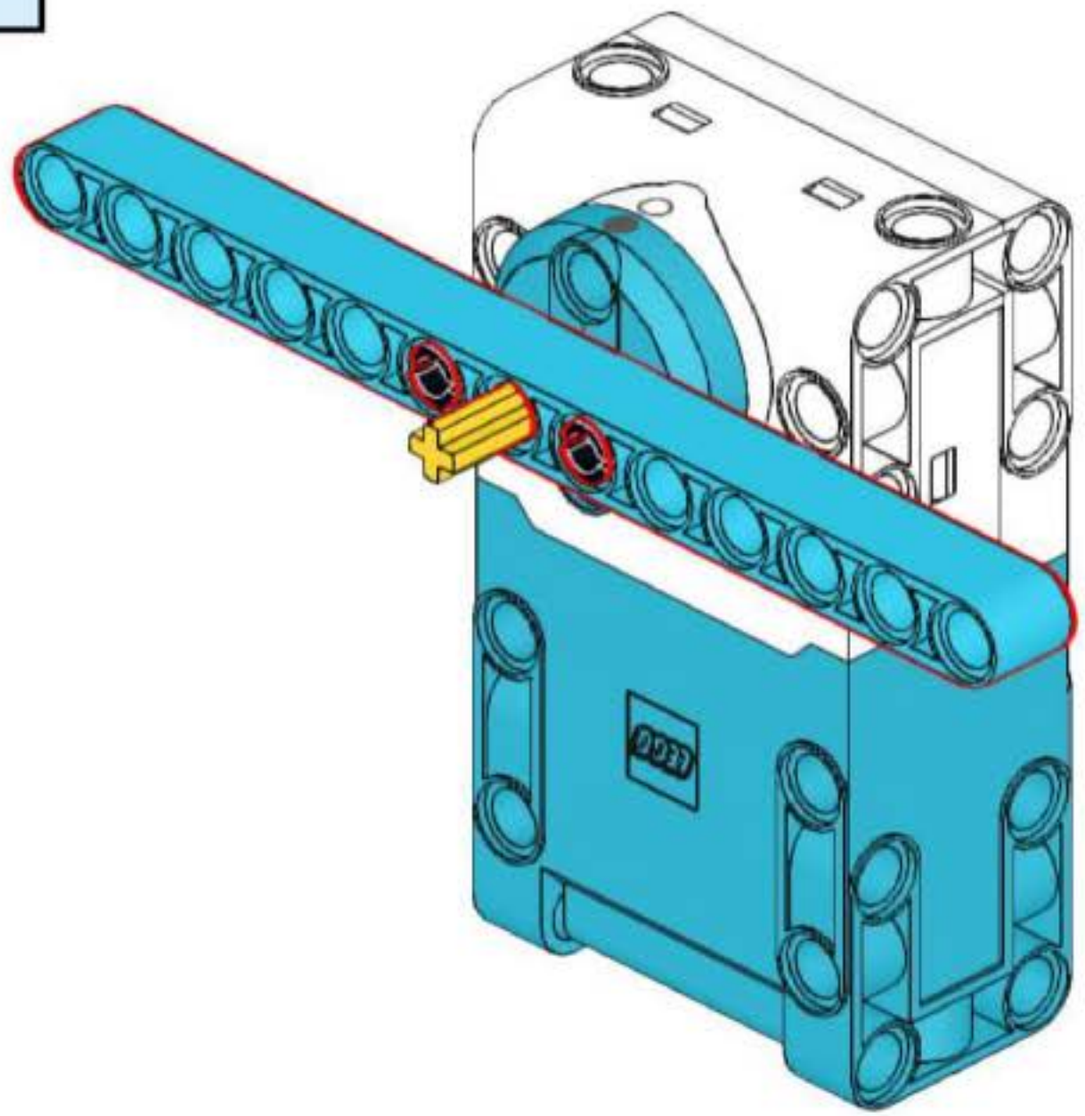

3

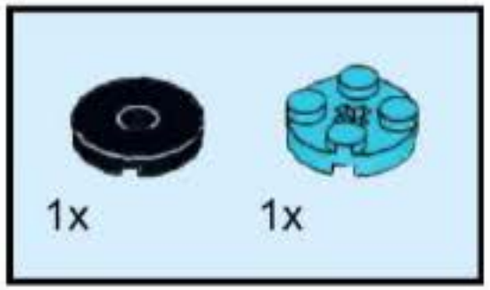

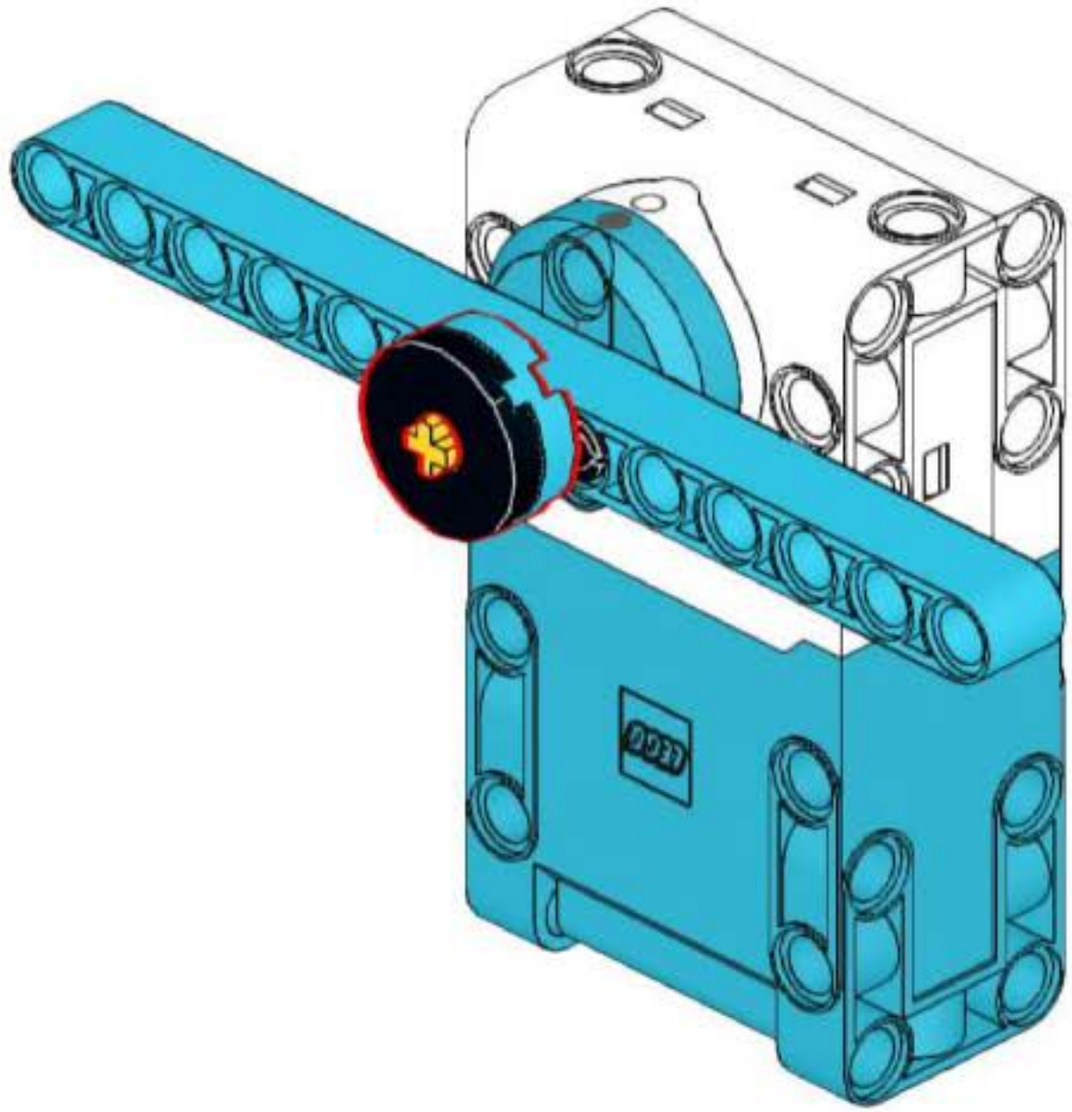

4

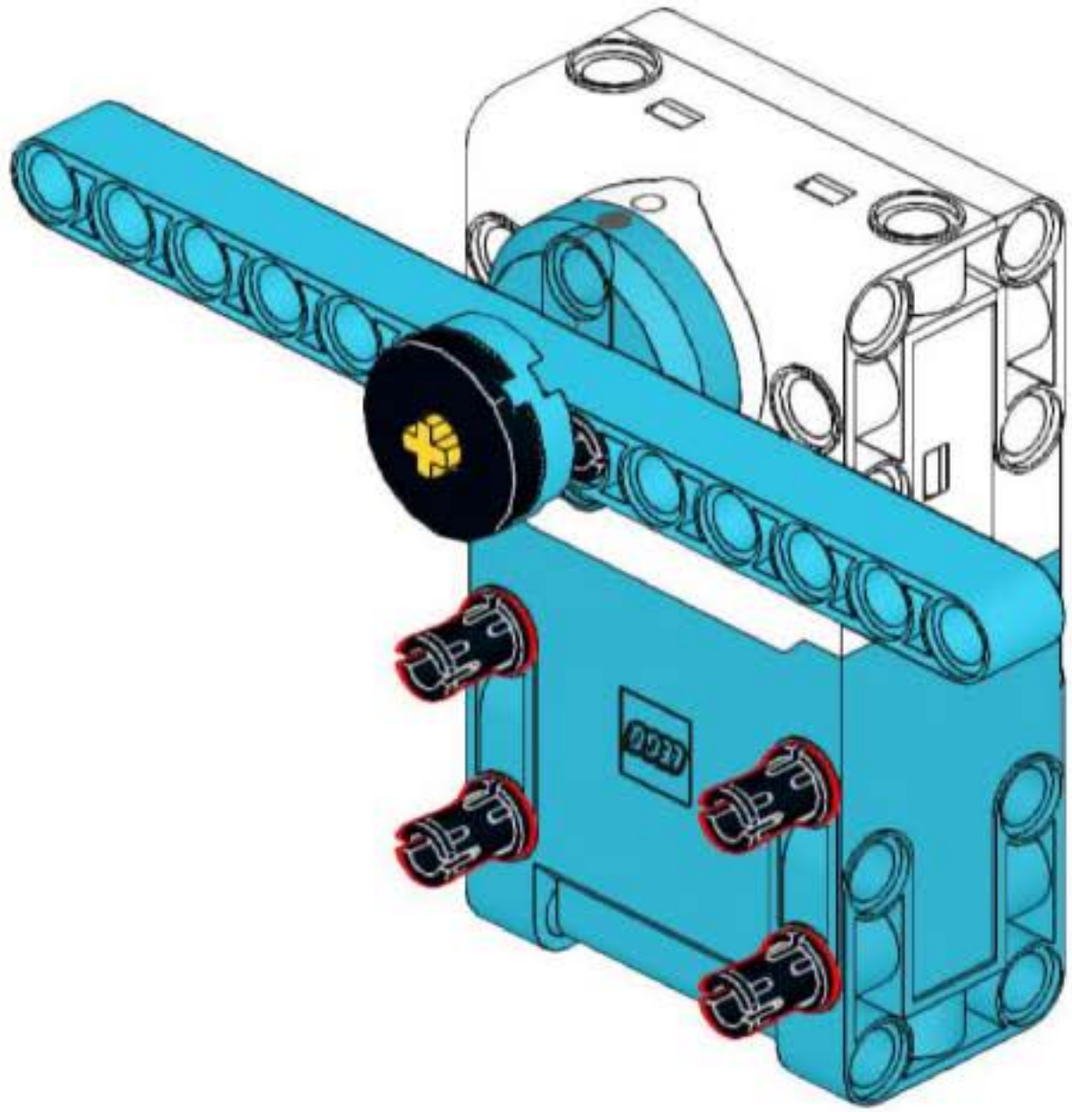

5

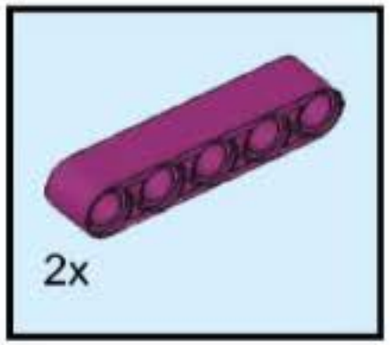

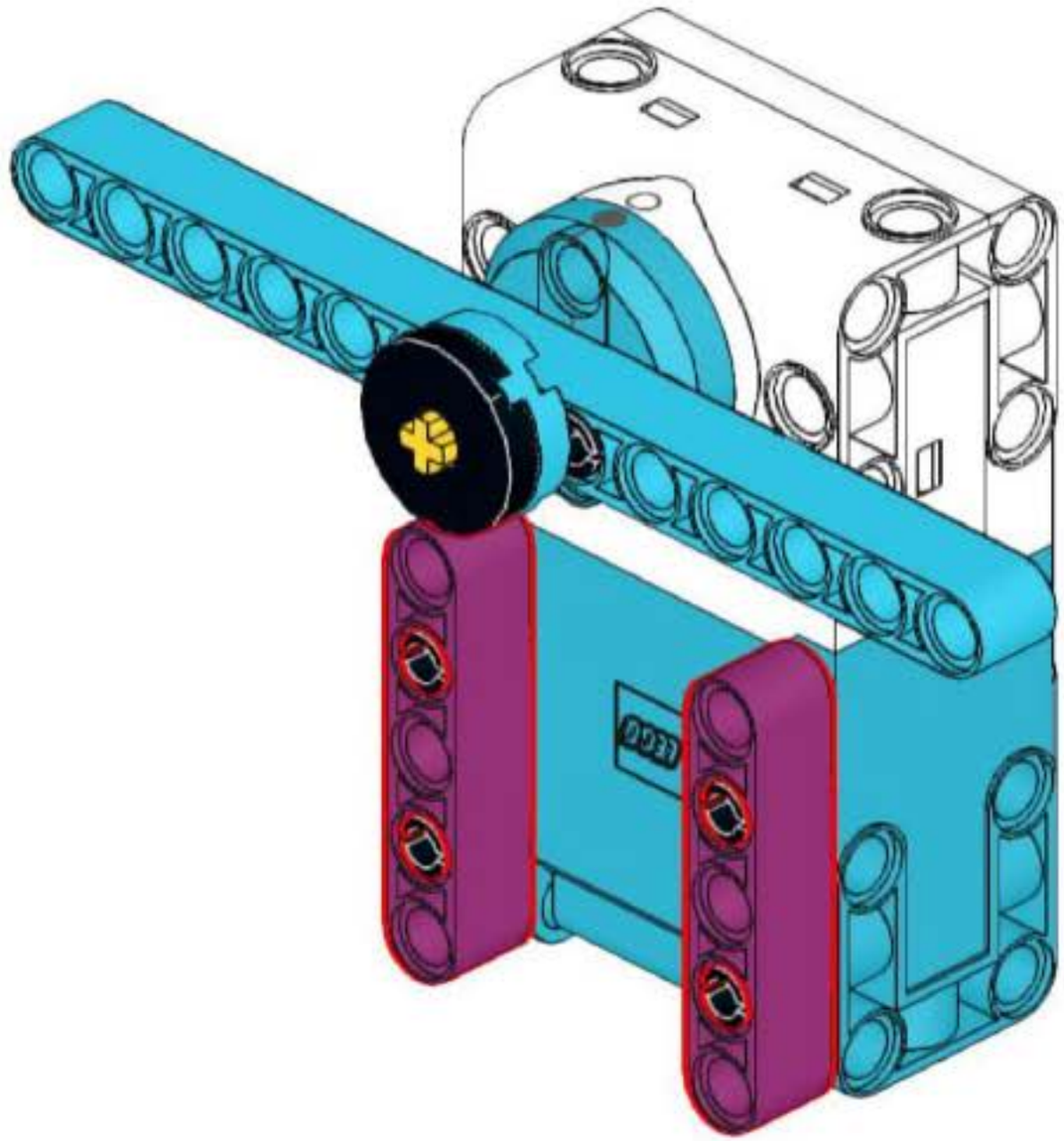

6

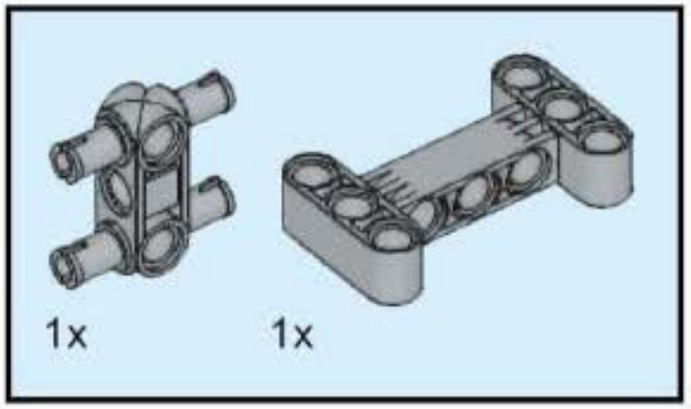

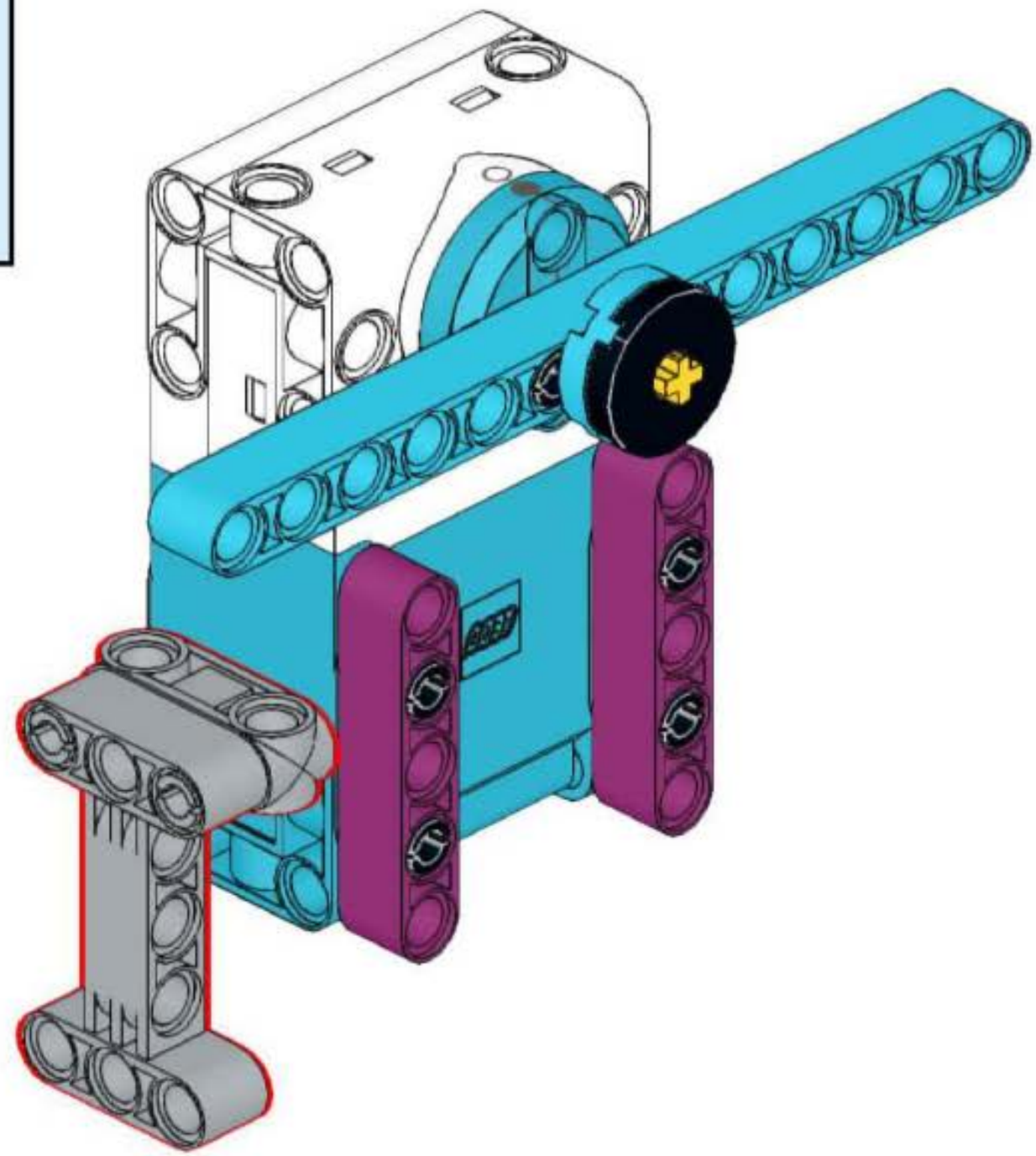

7

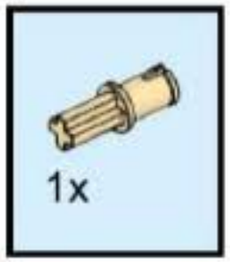

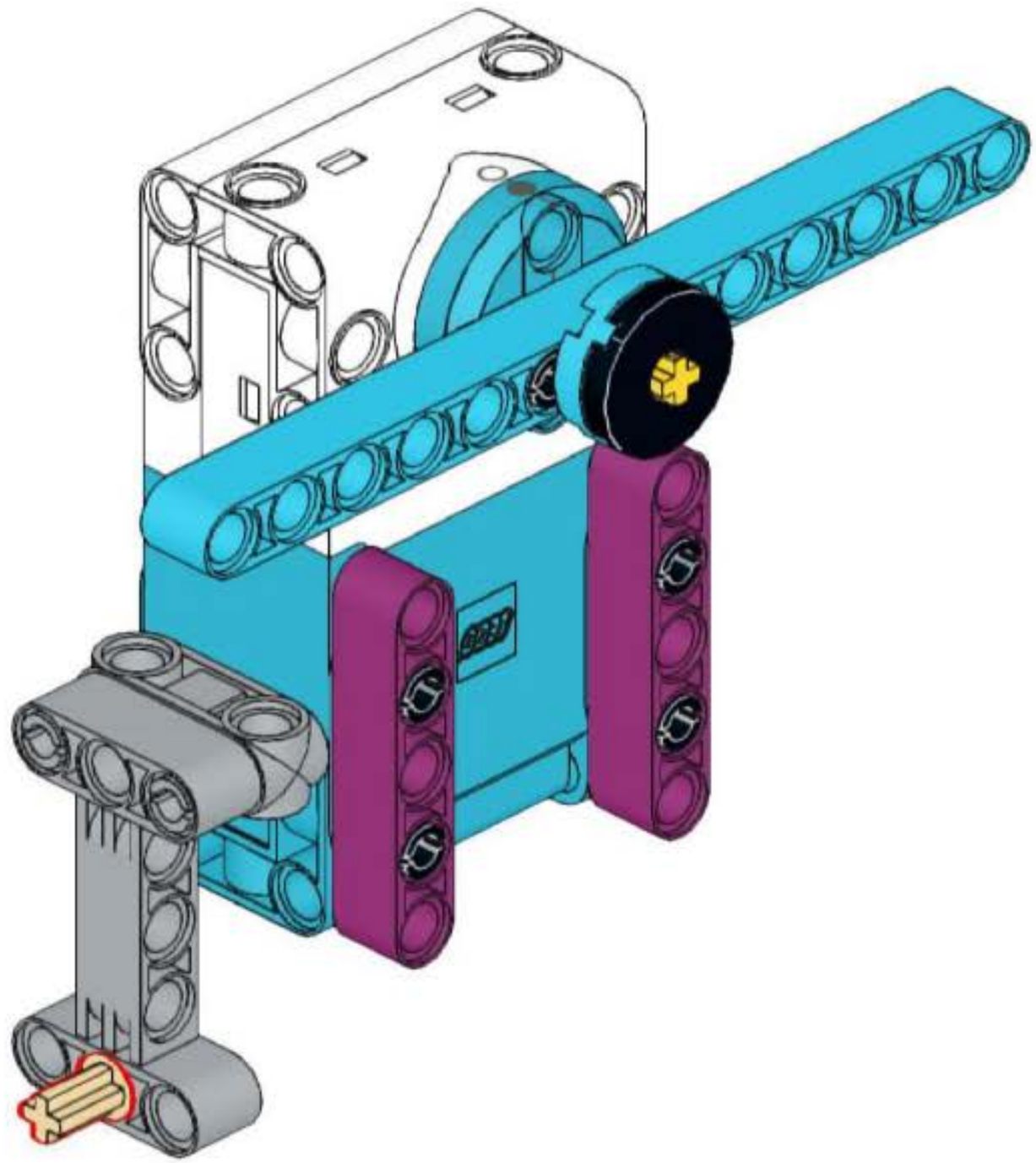

8

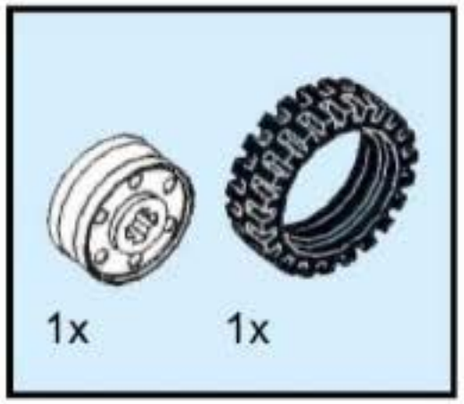

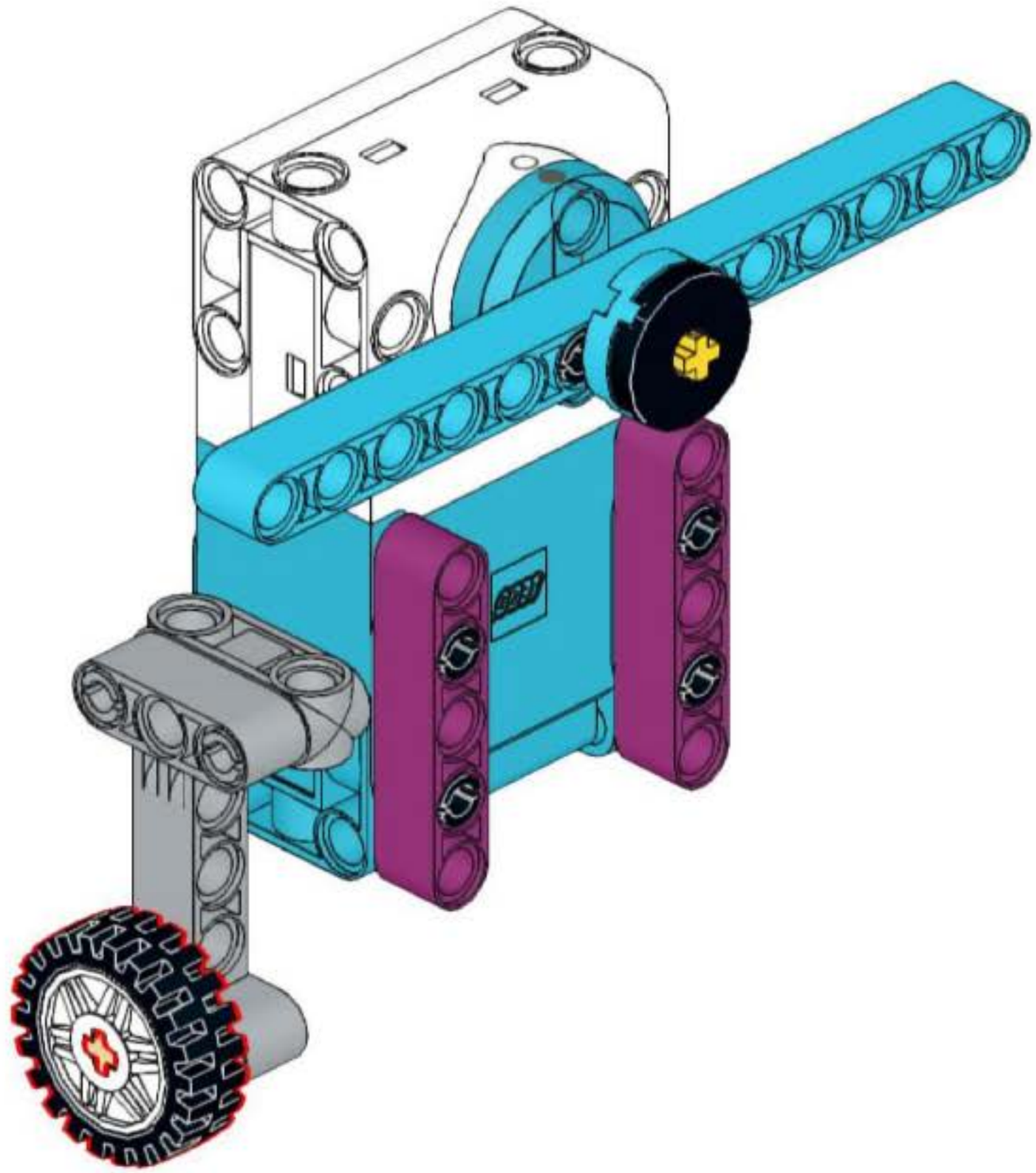

9

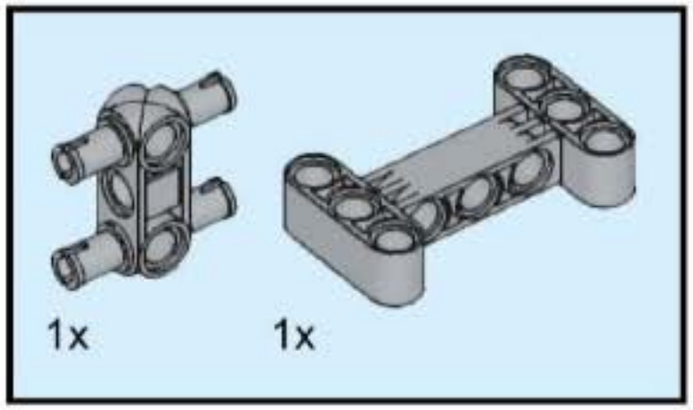

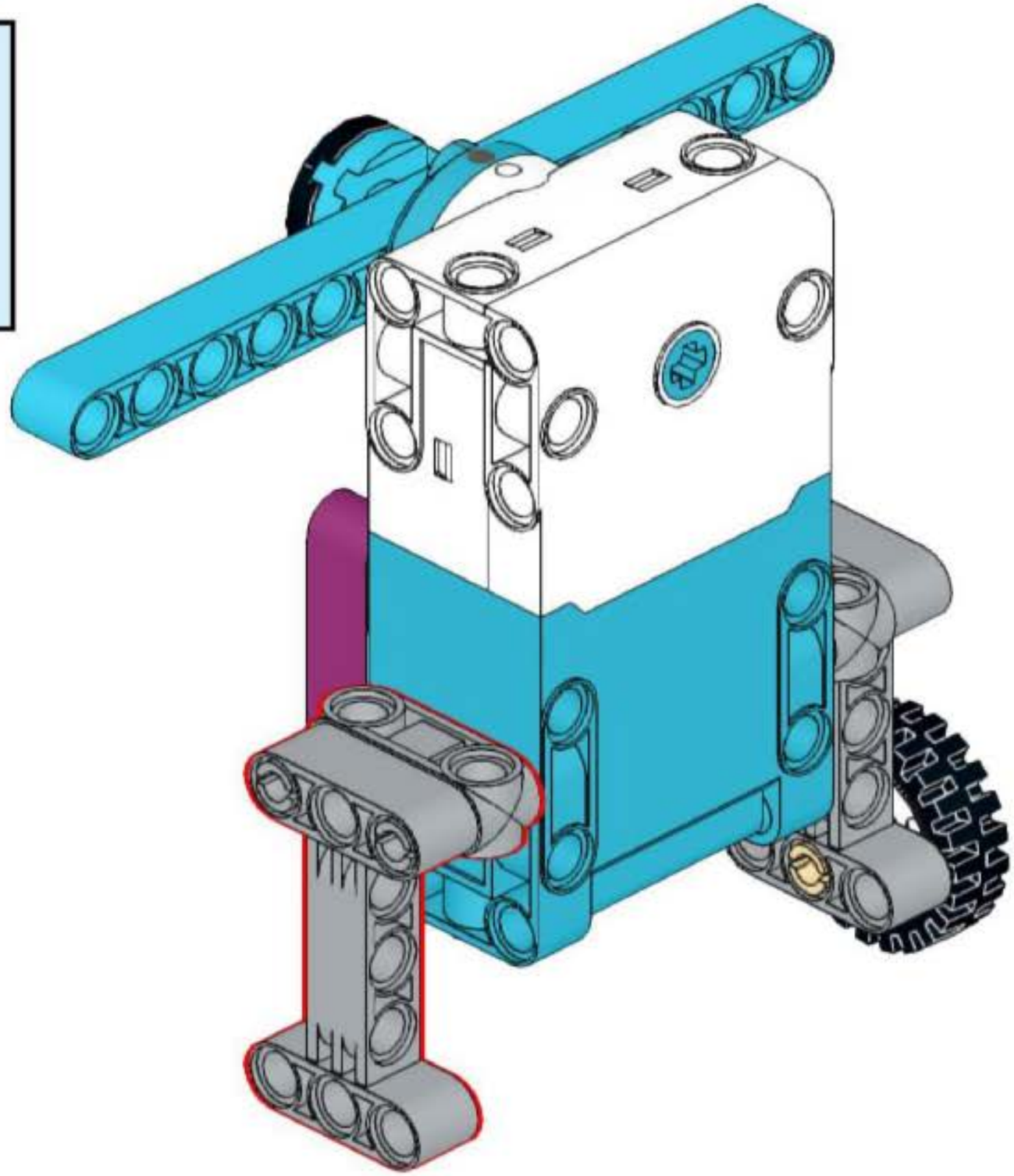

10

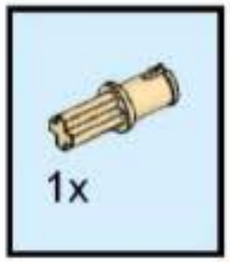

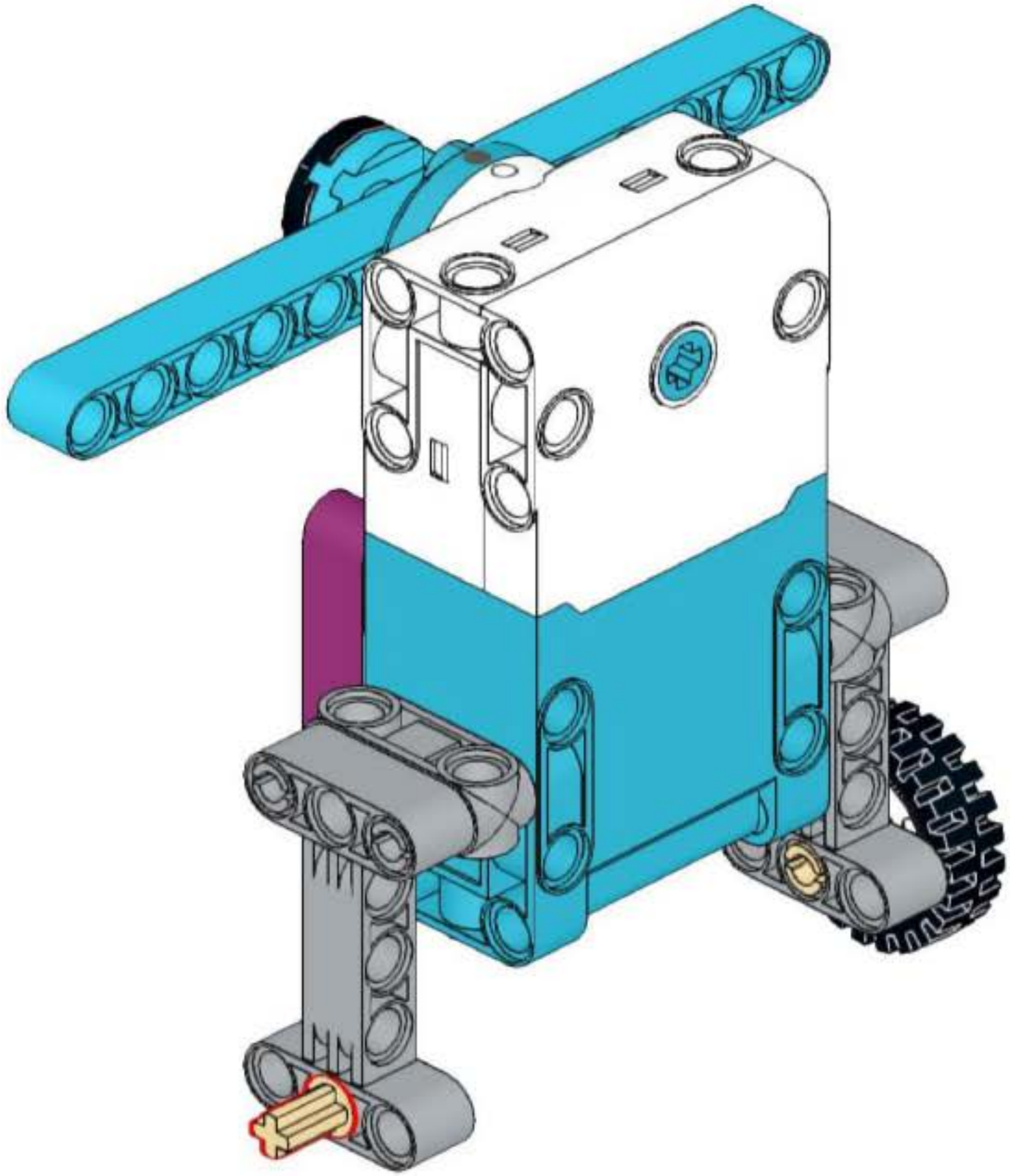

11

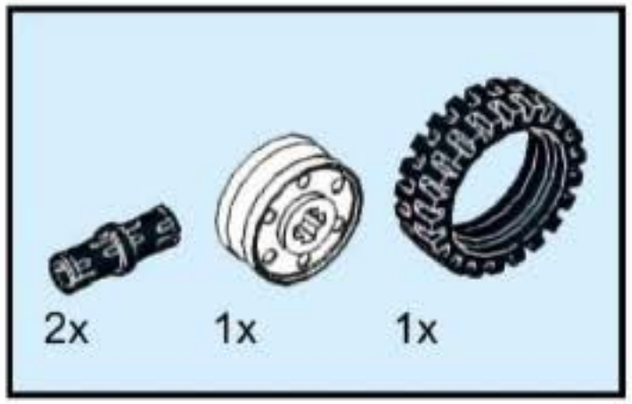

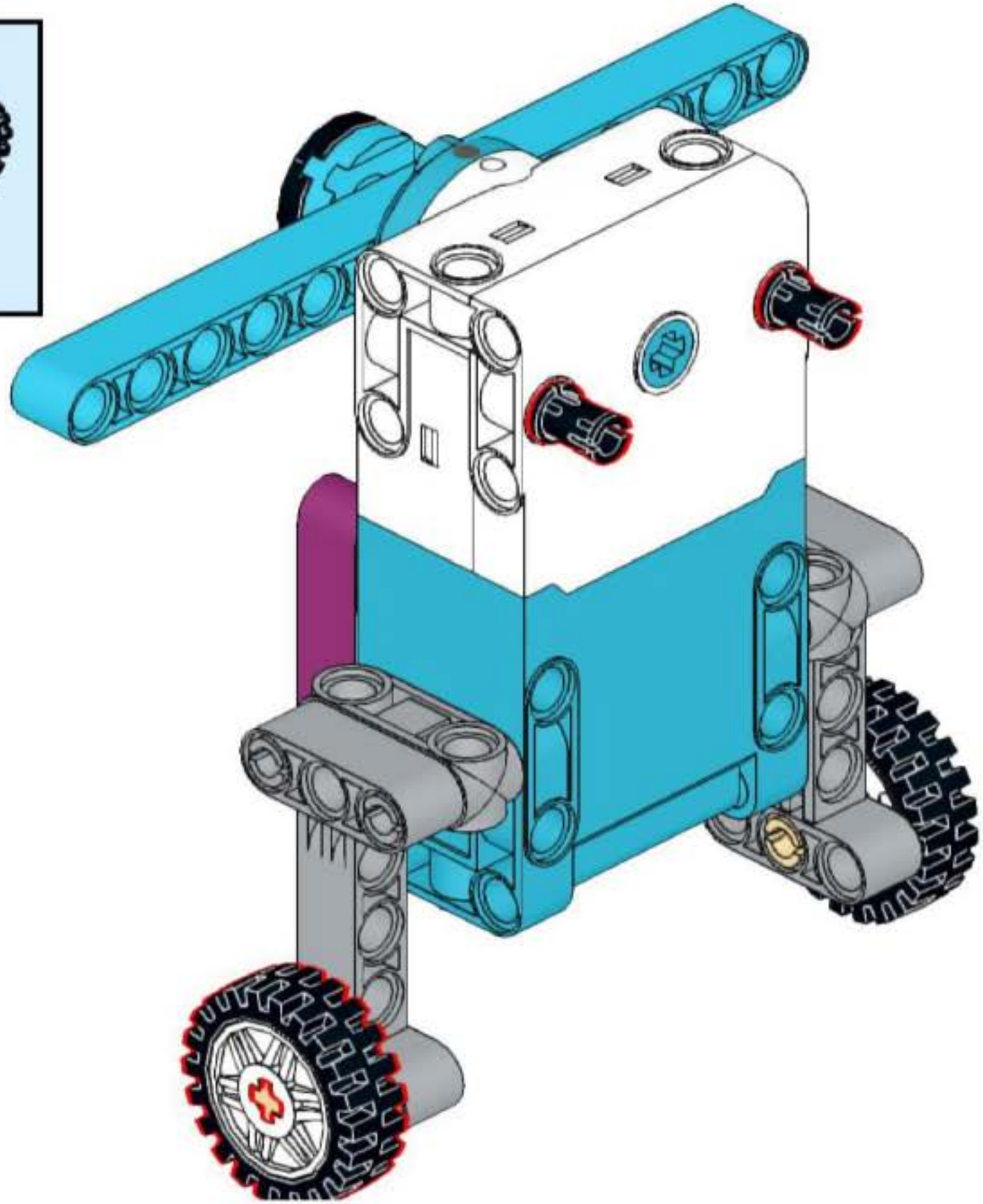

12

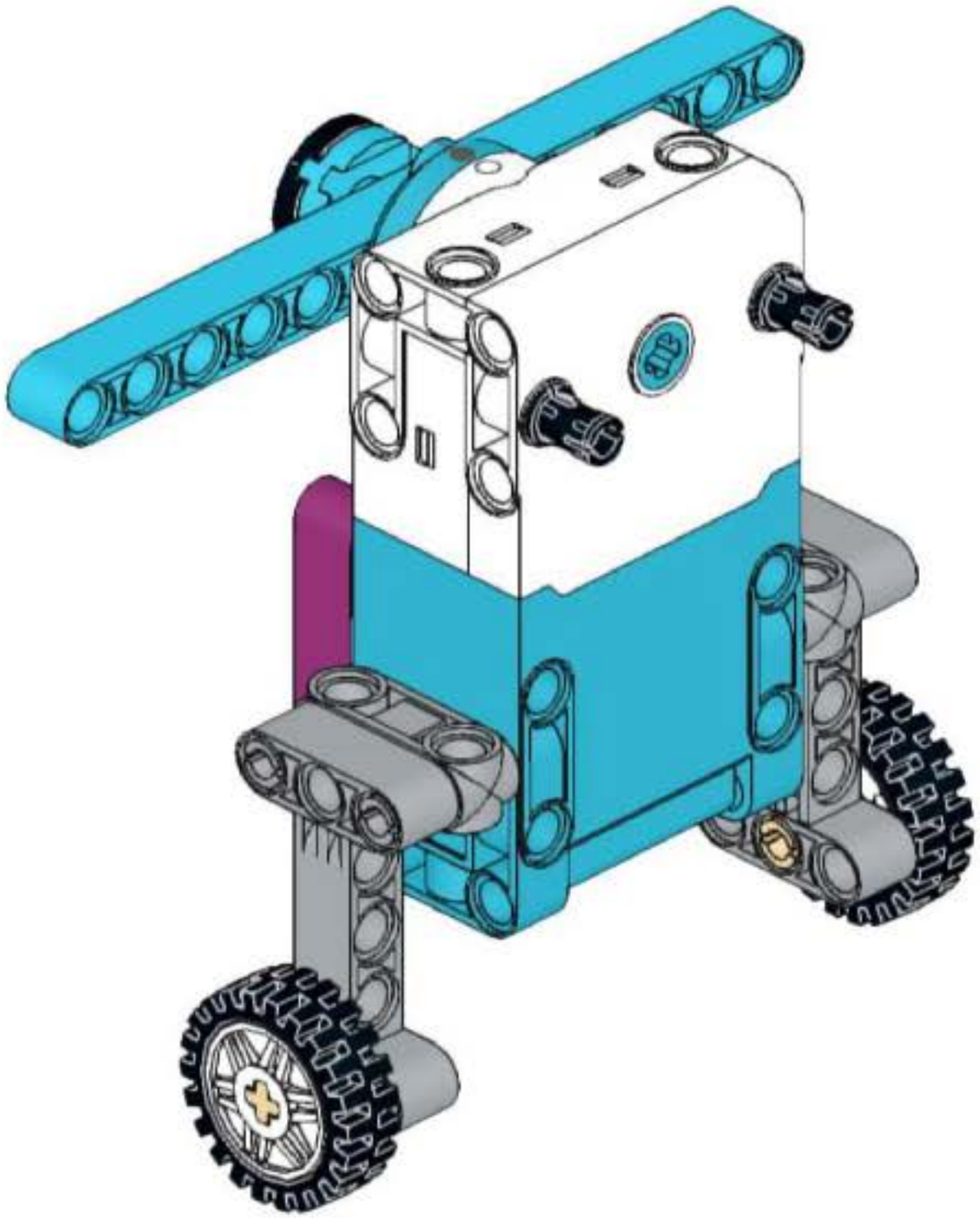

13

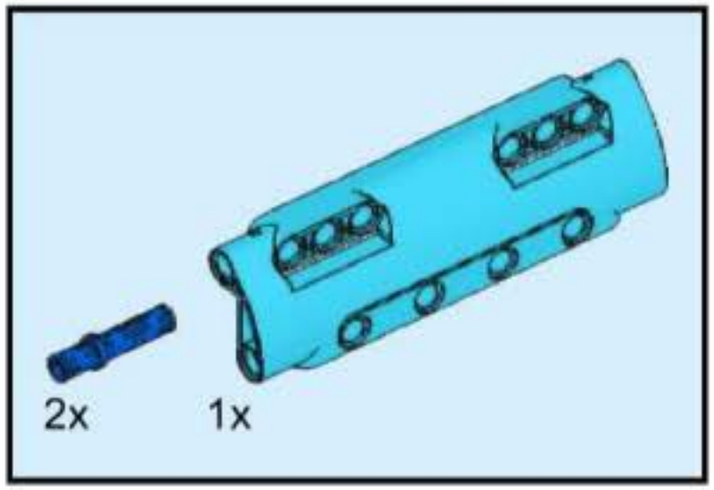

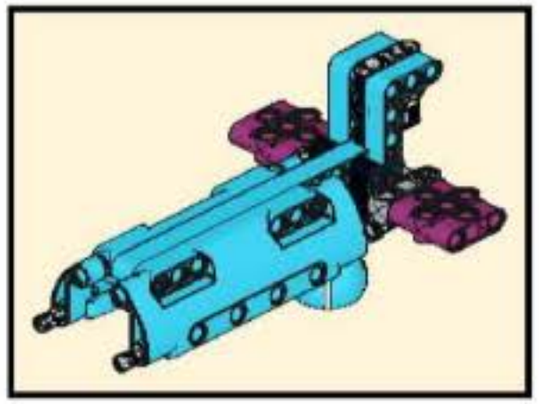

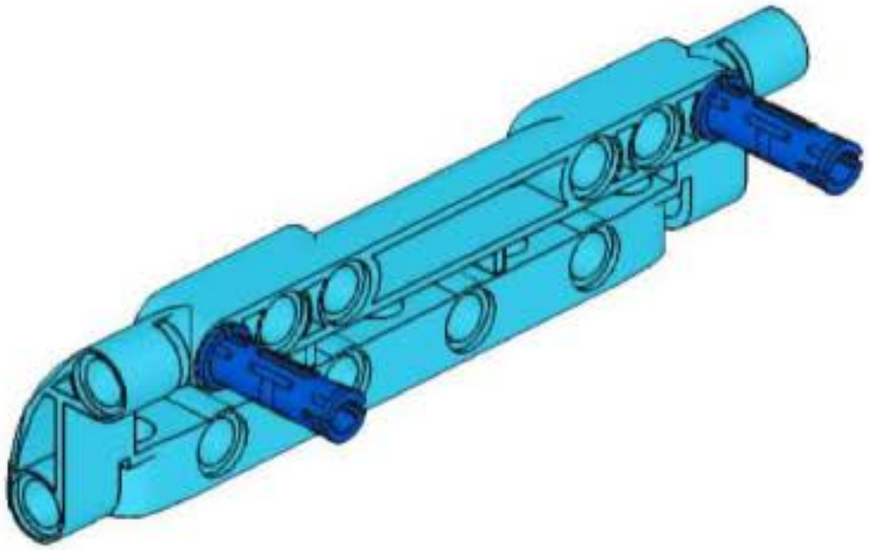

14

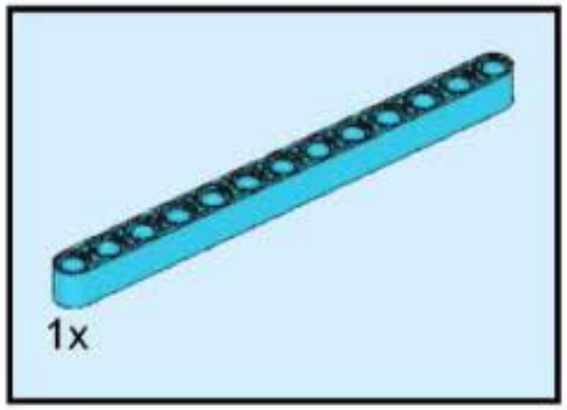

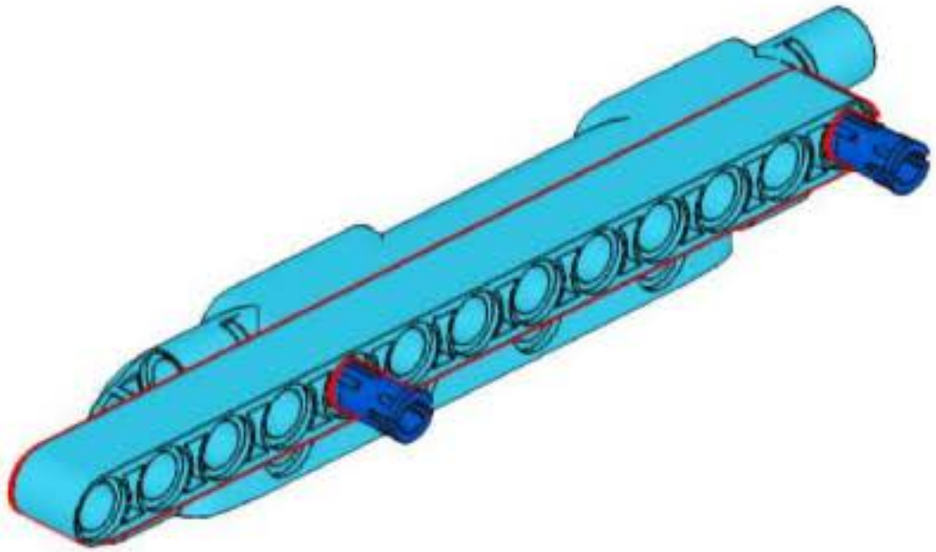

15

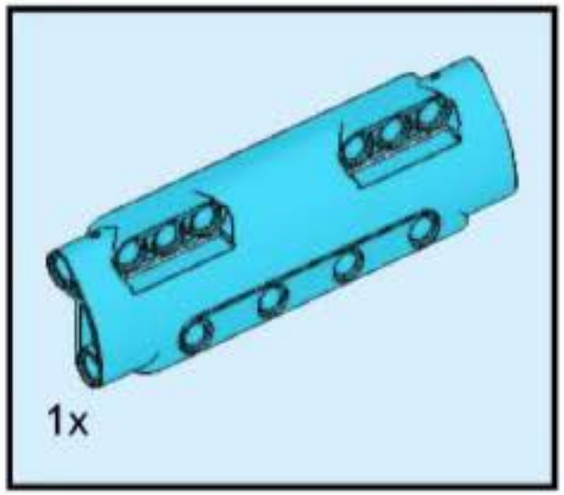

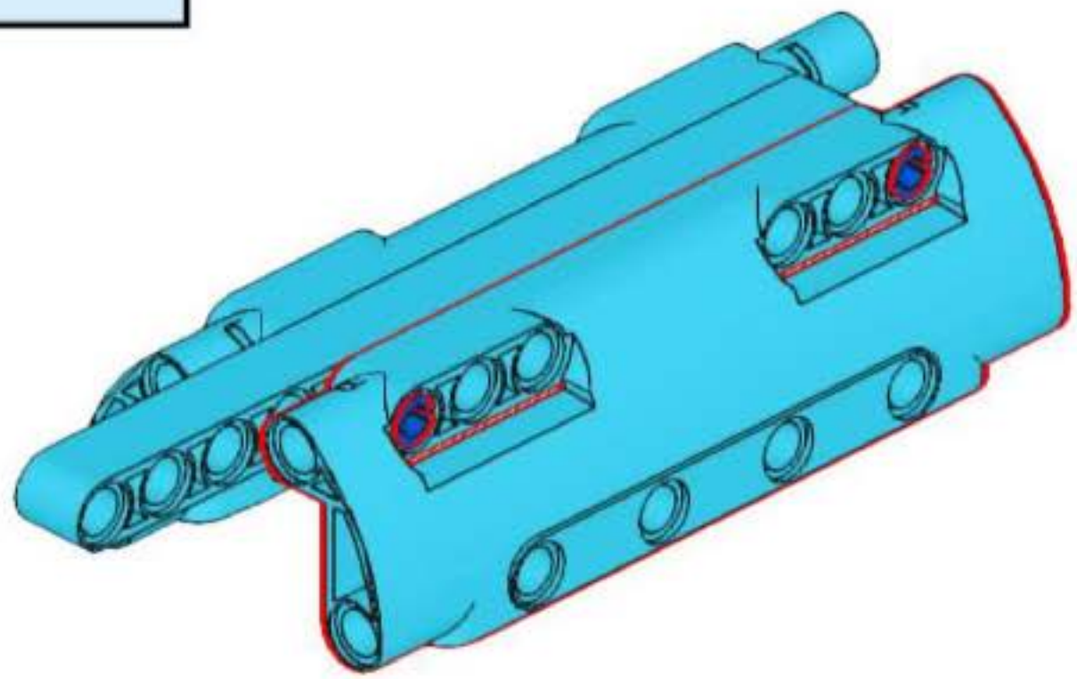

16

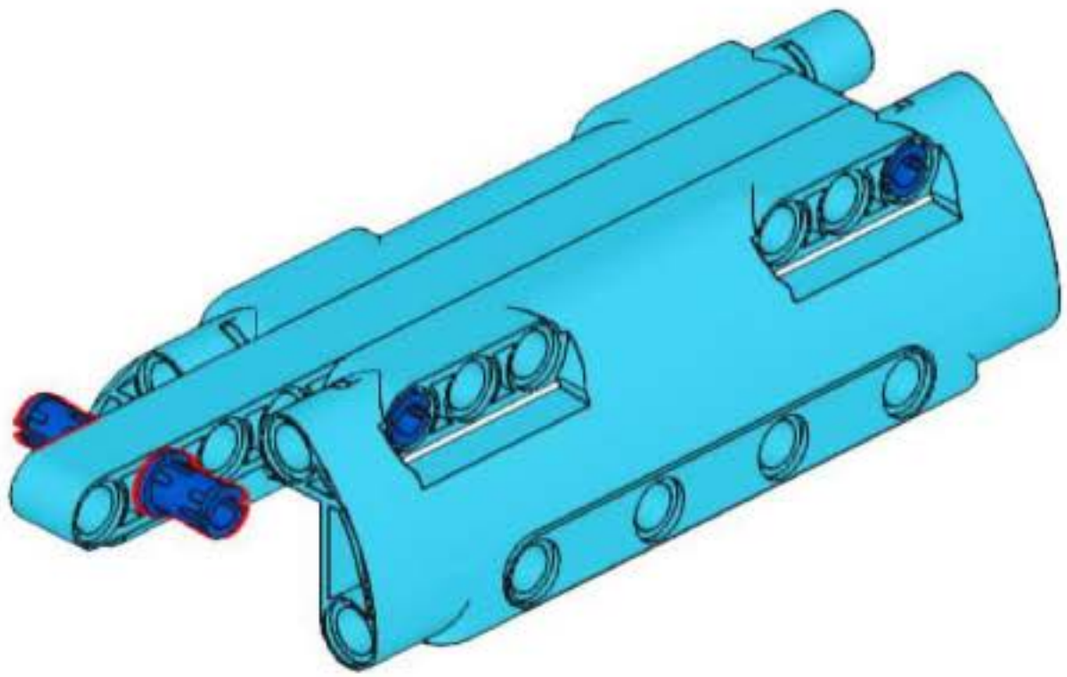

17

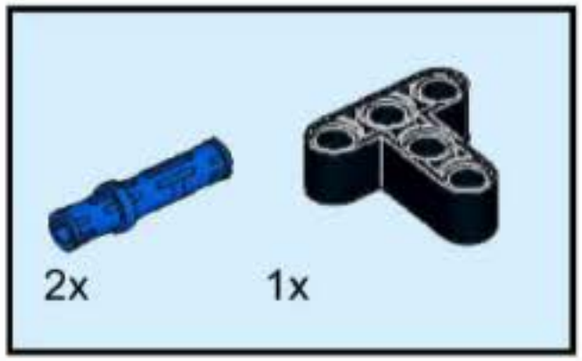

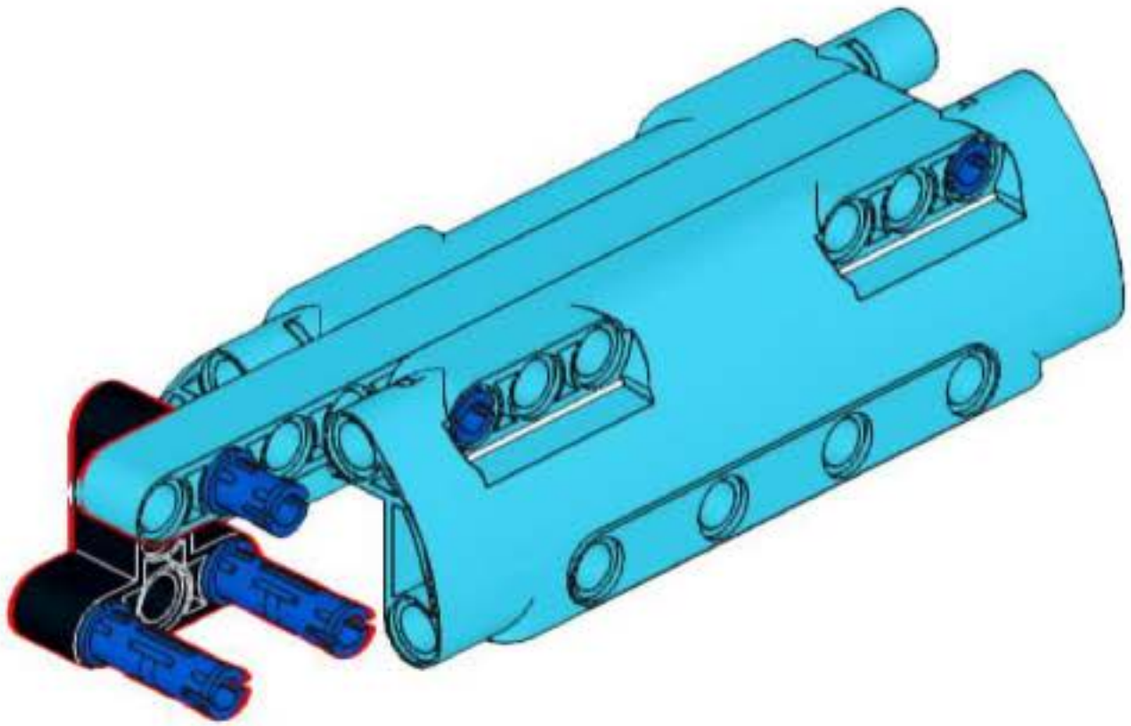

18

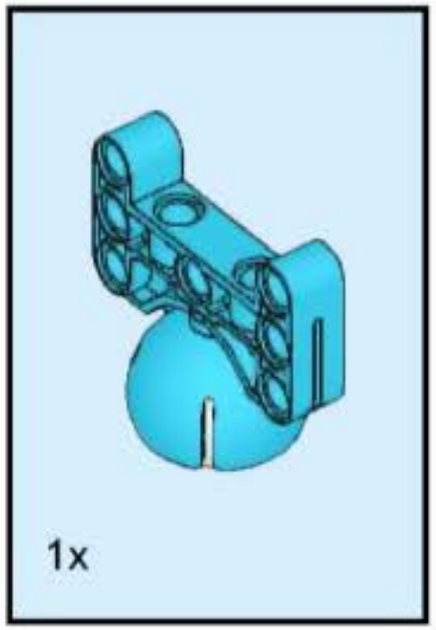

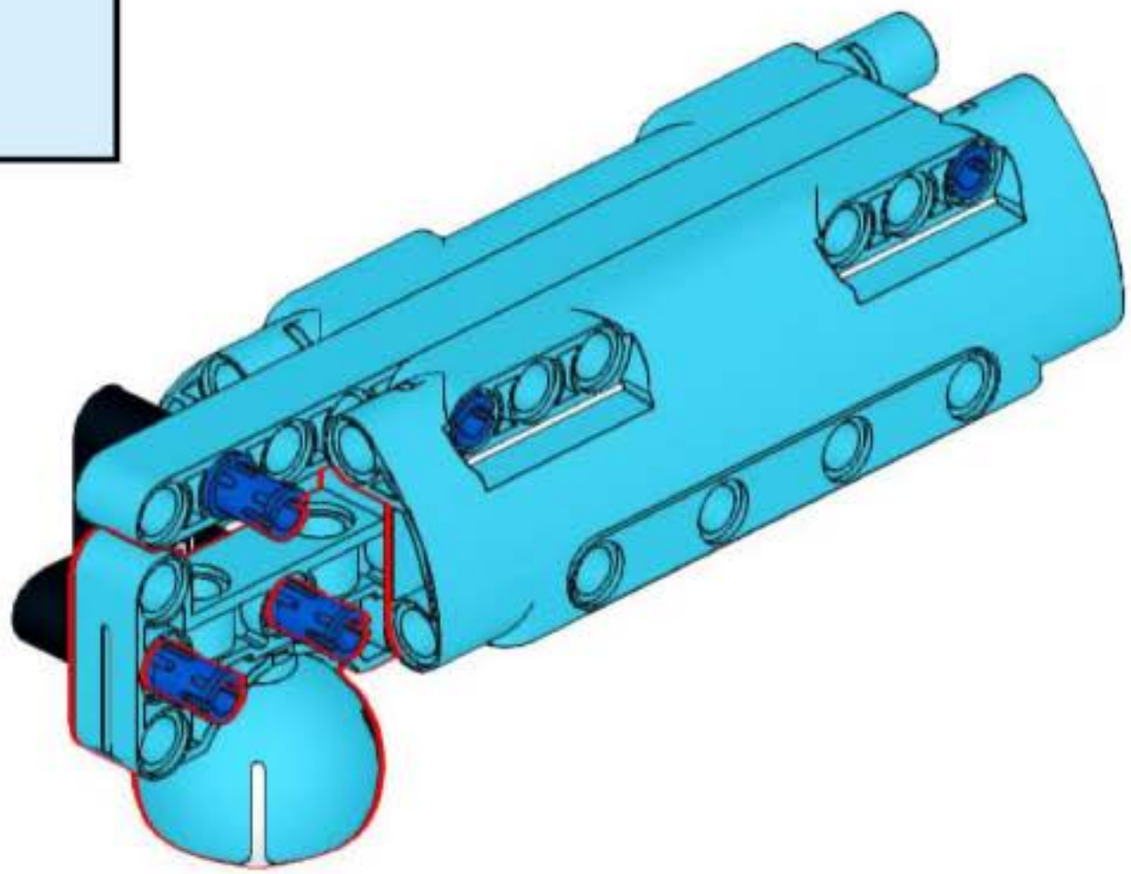

19

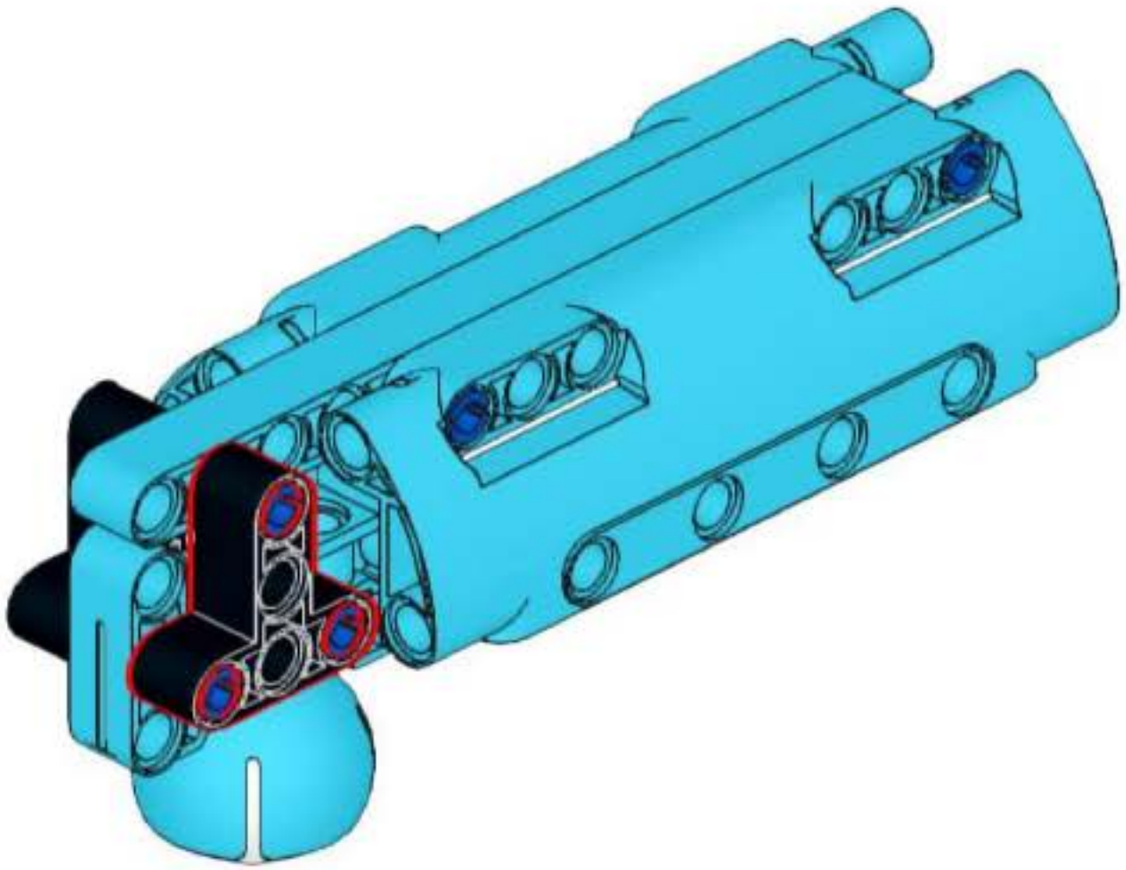

20

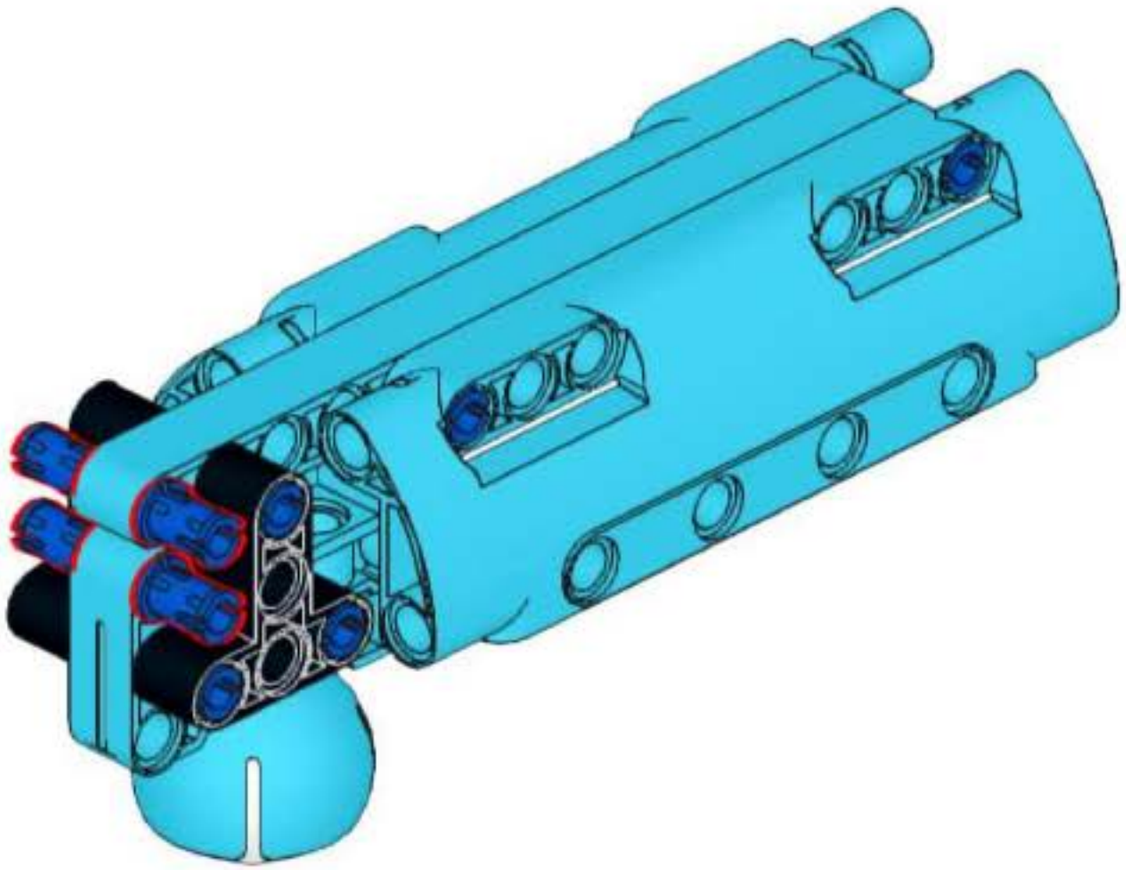

21

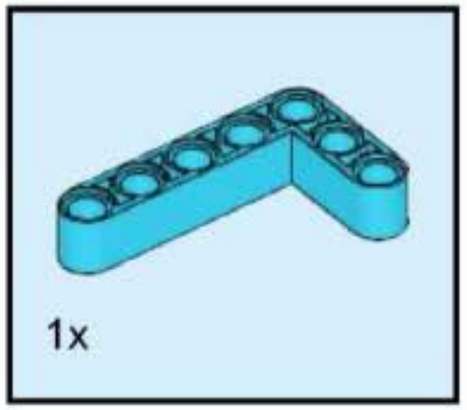

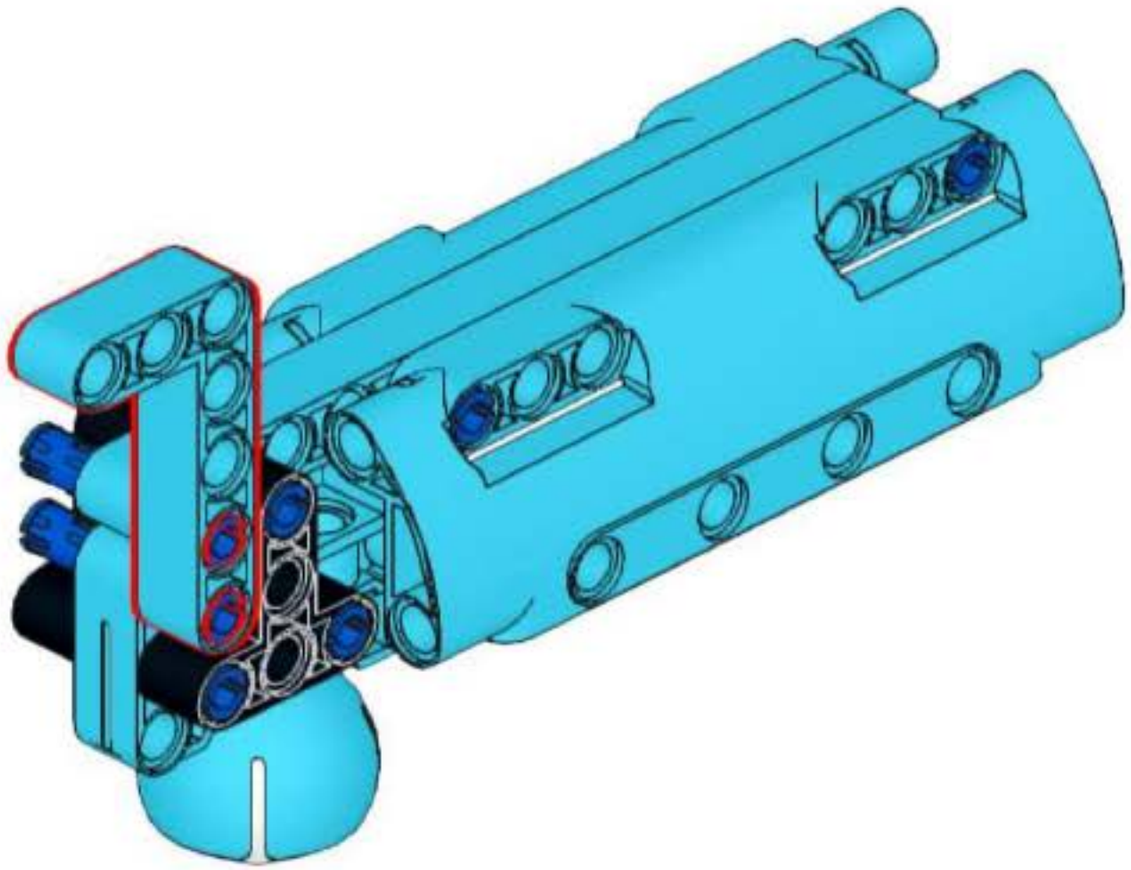

22

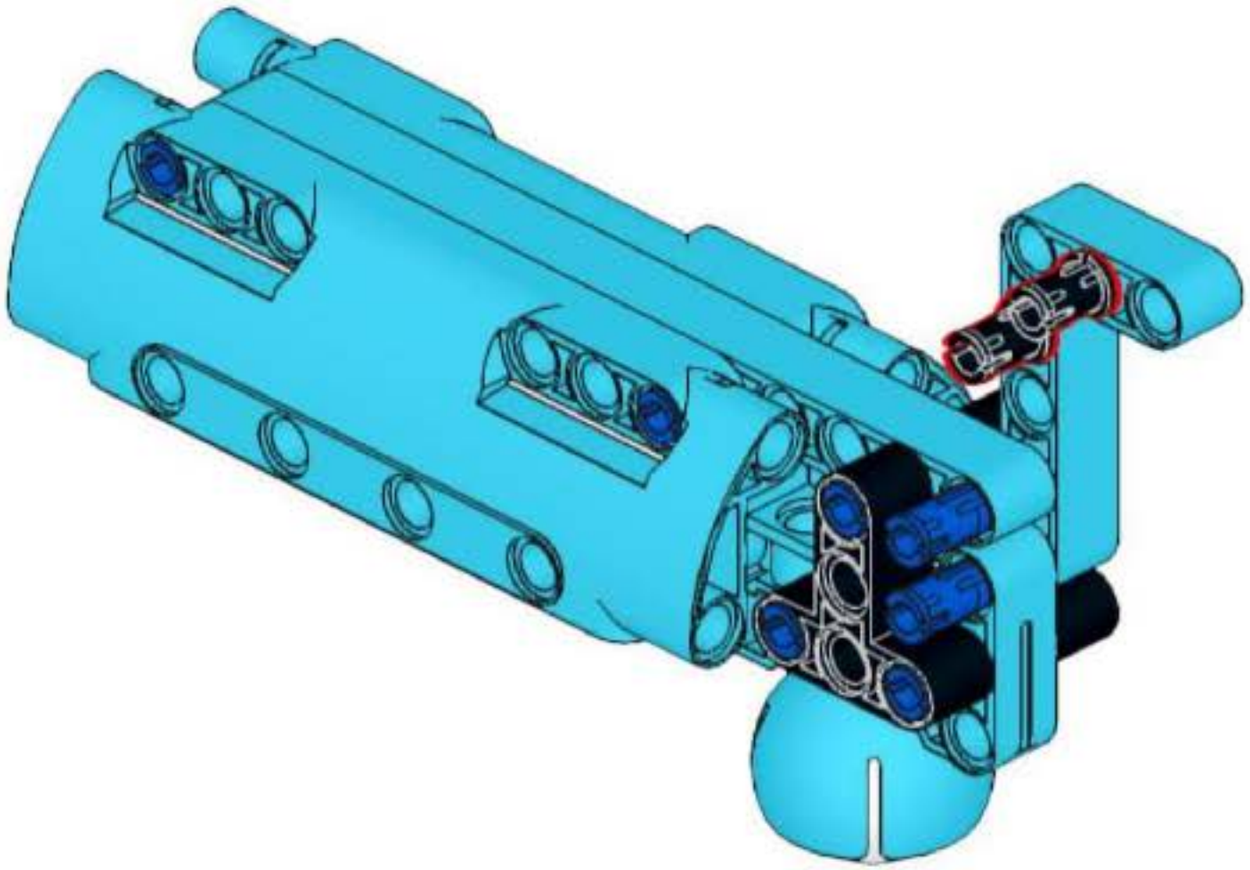

23

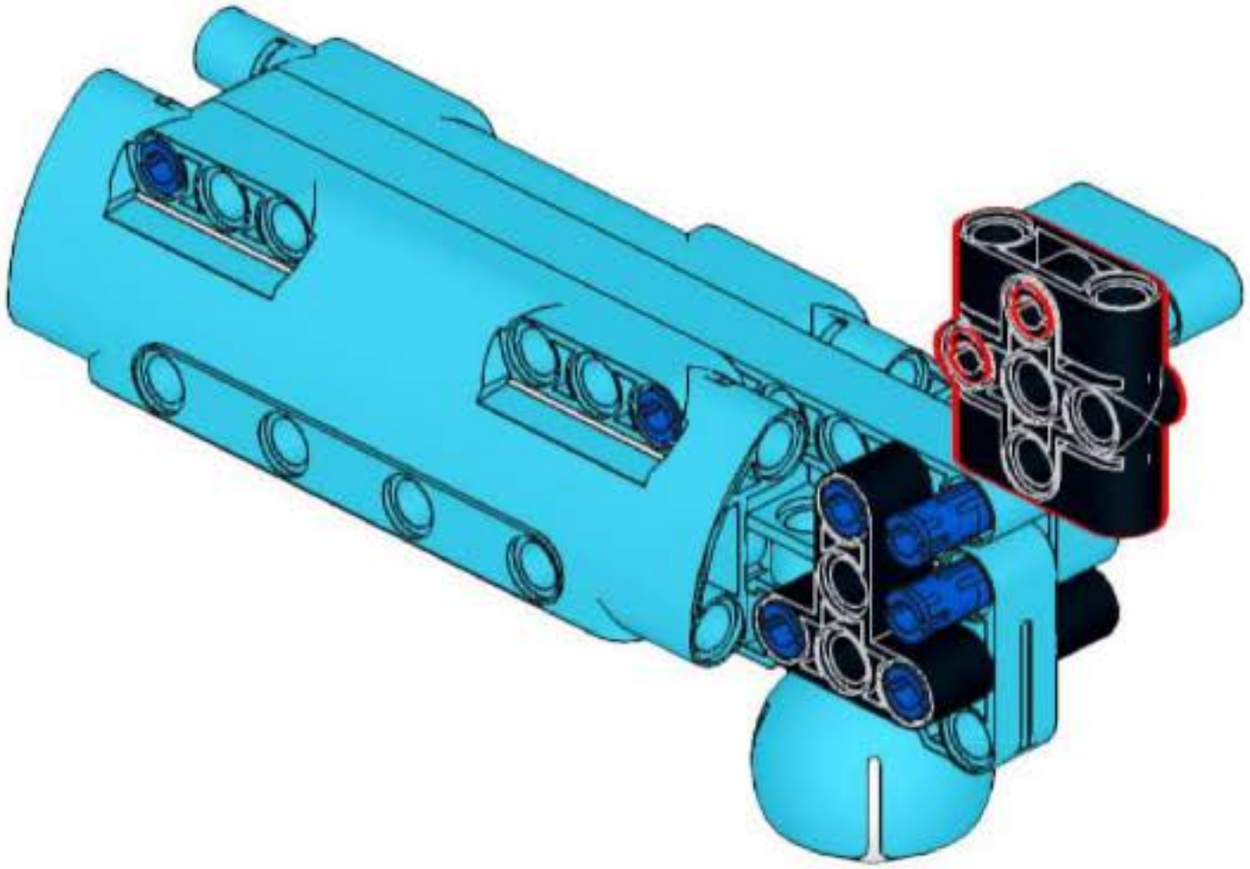

24

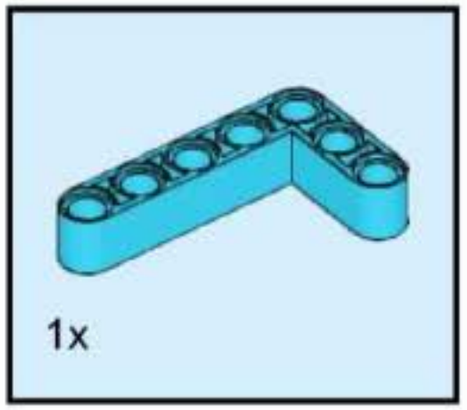

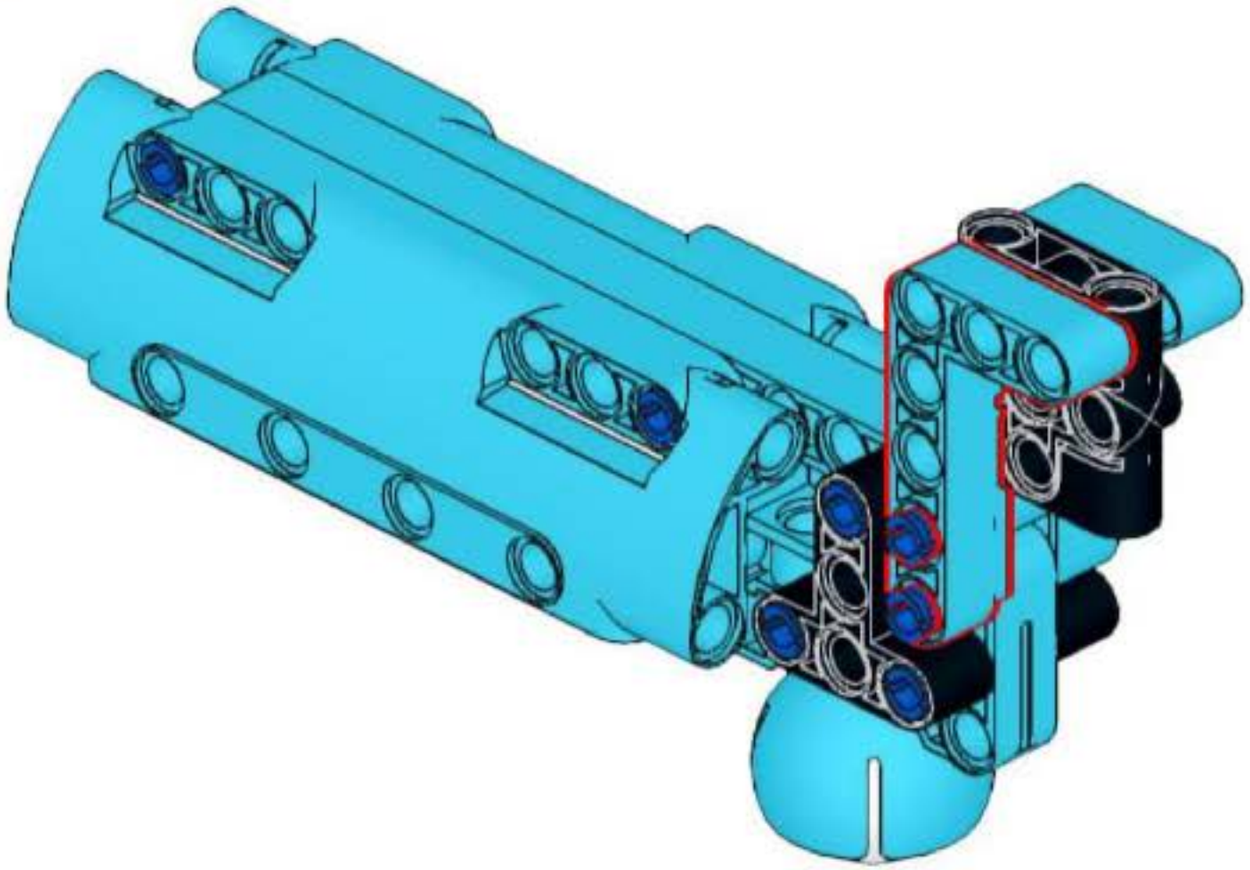

25

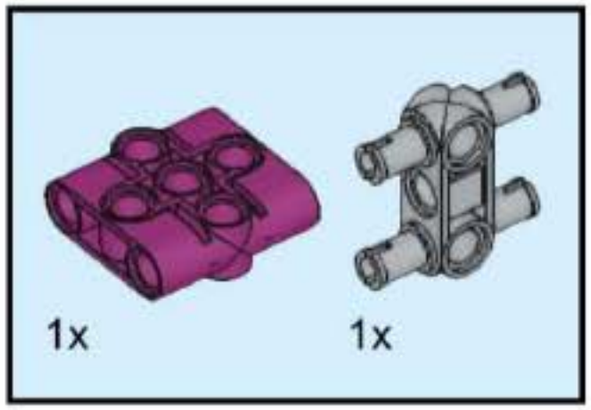

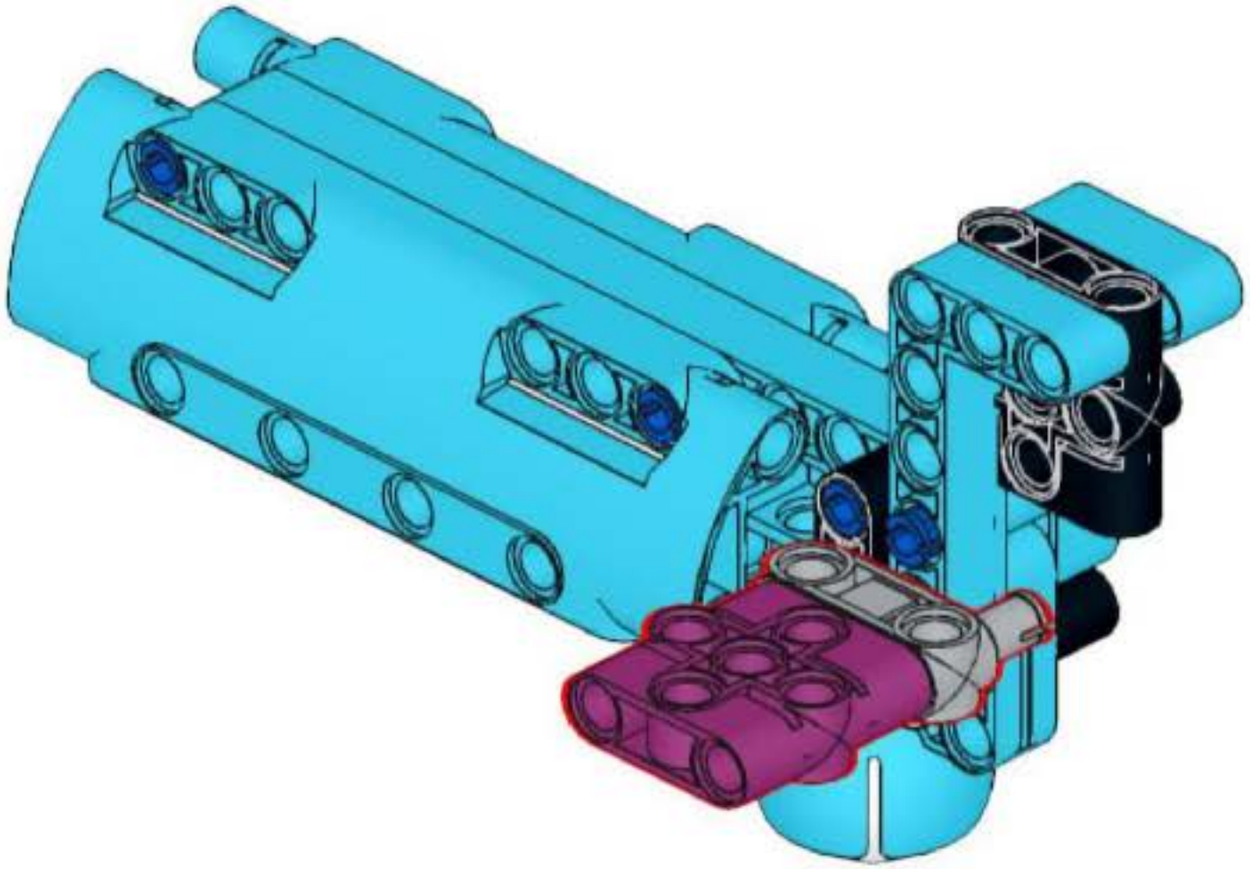

26

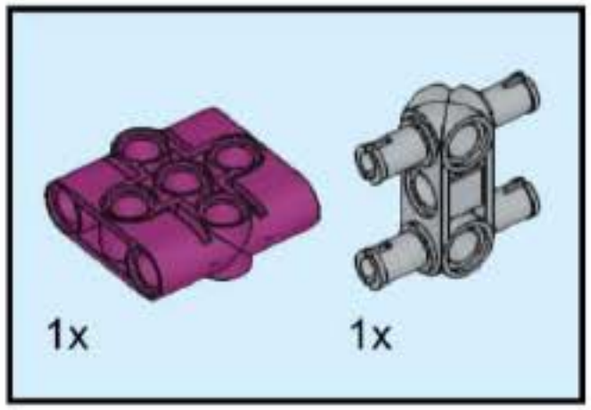

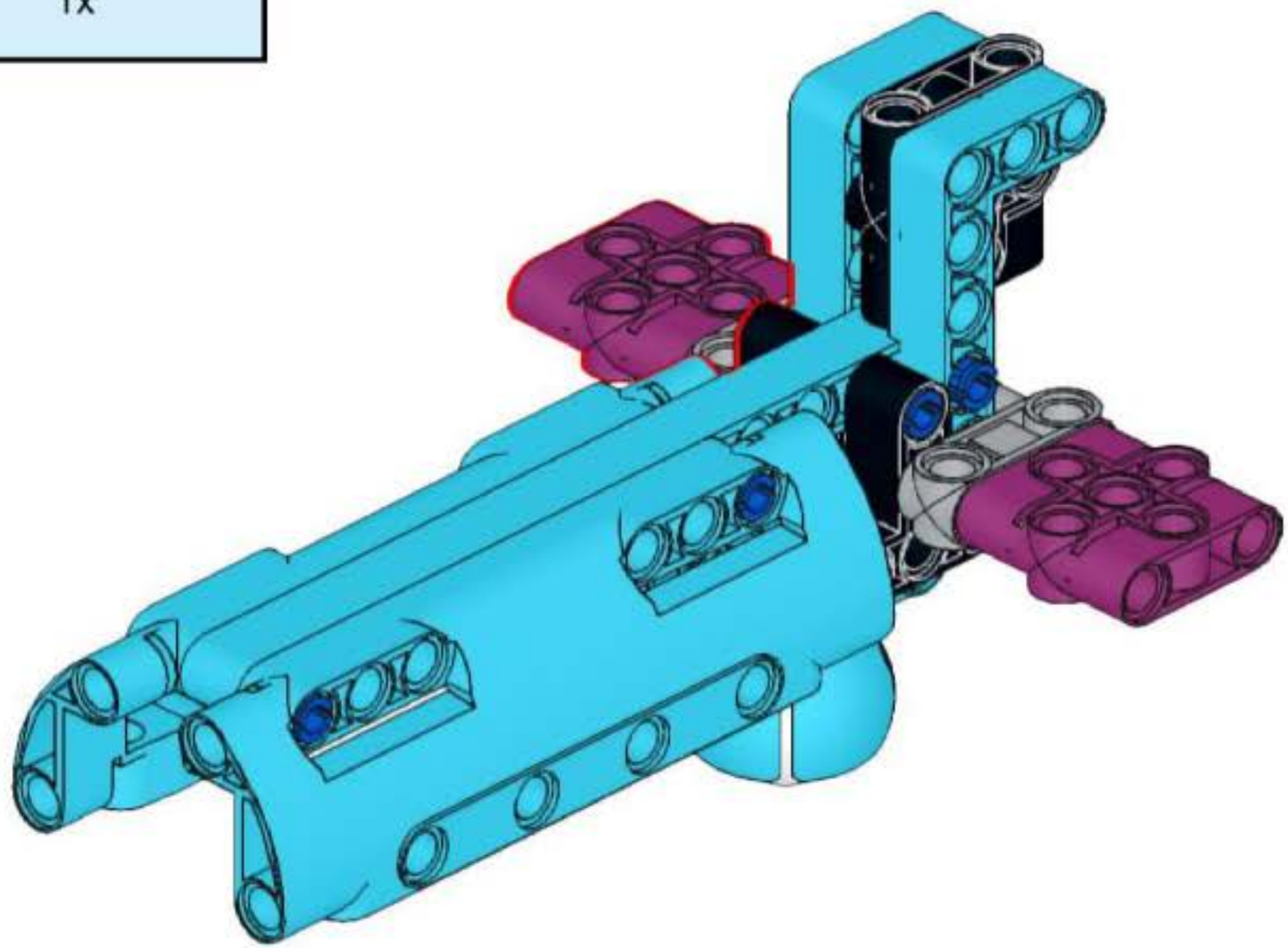

27

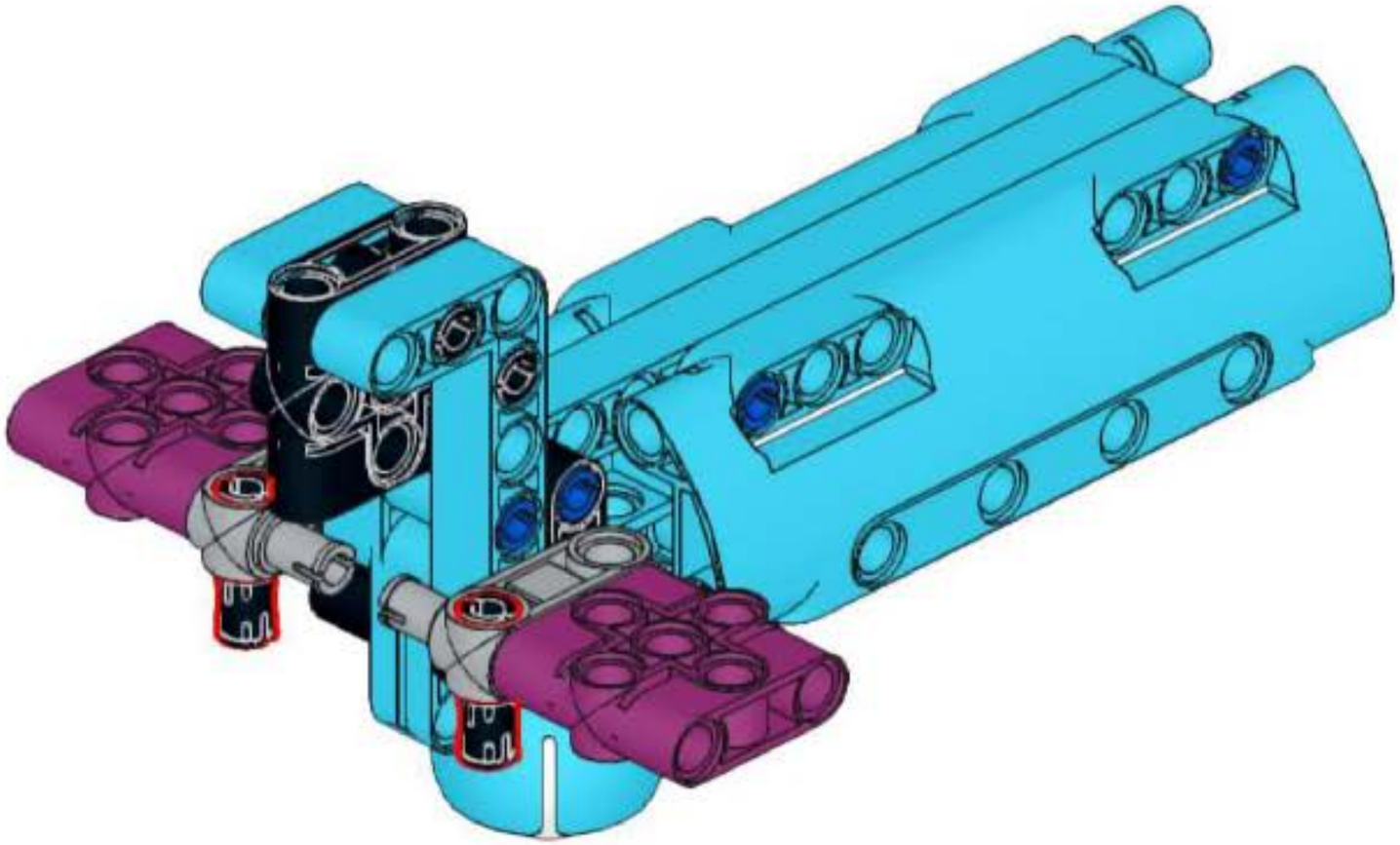

28

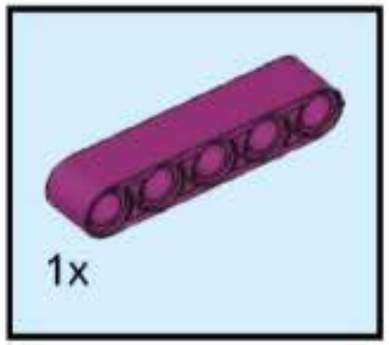

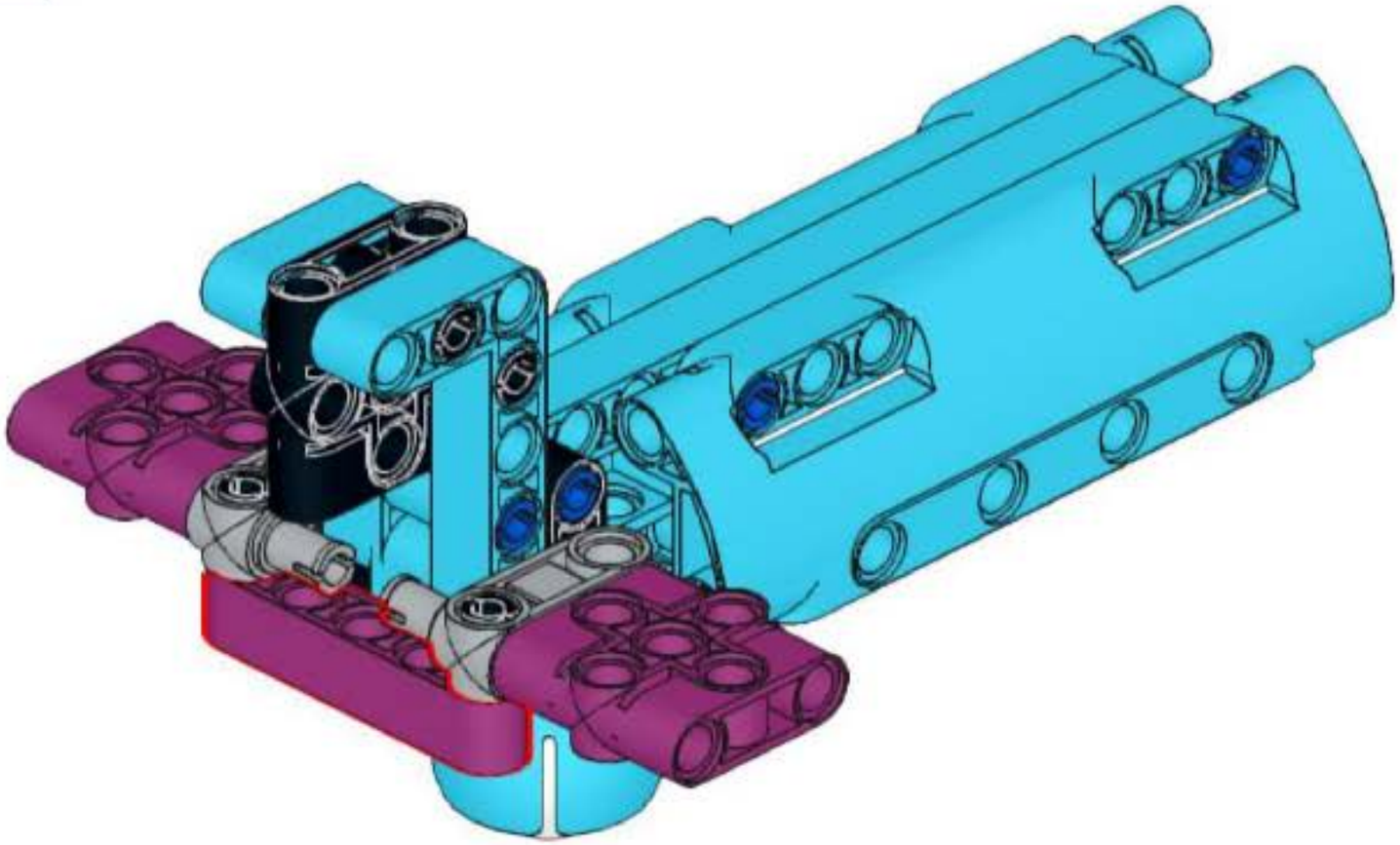

29

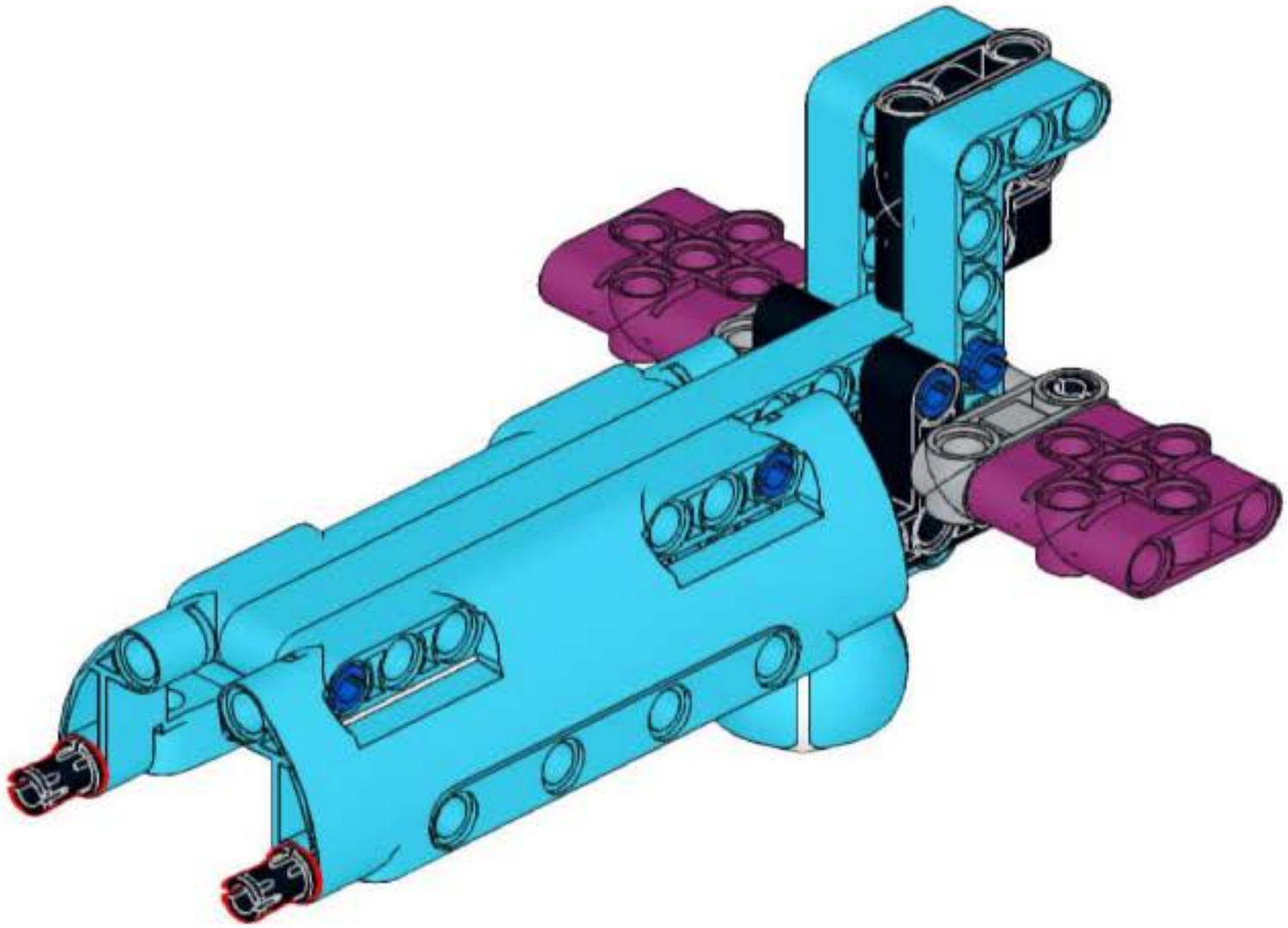

30

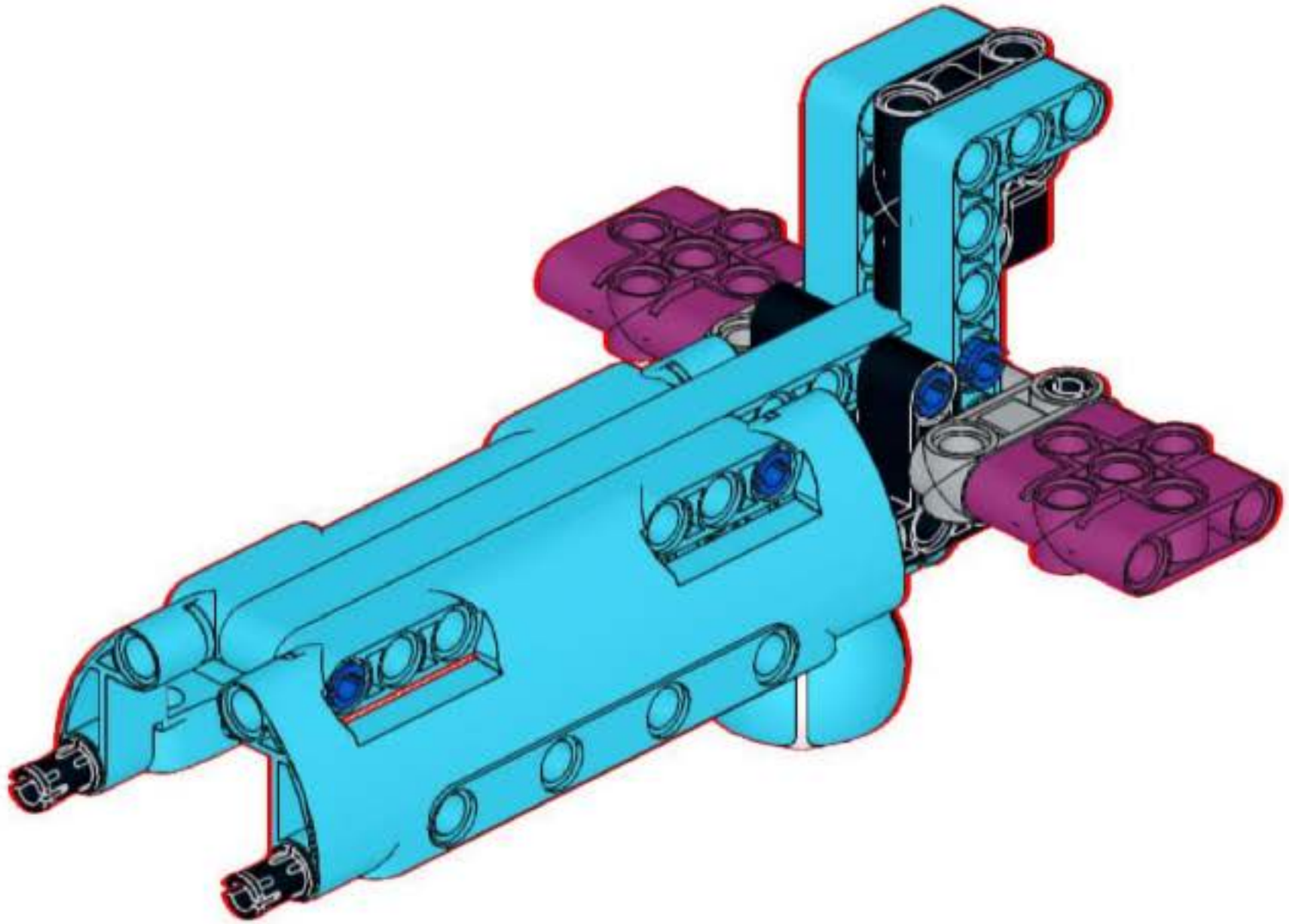

31

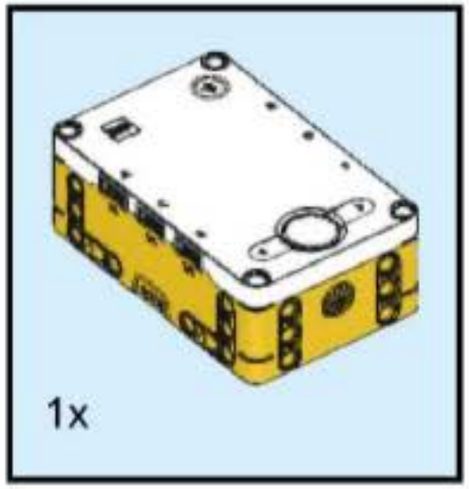

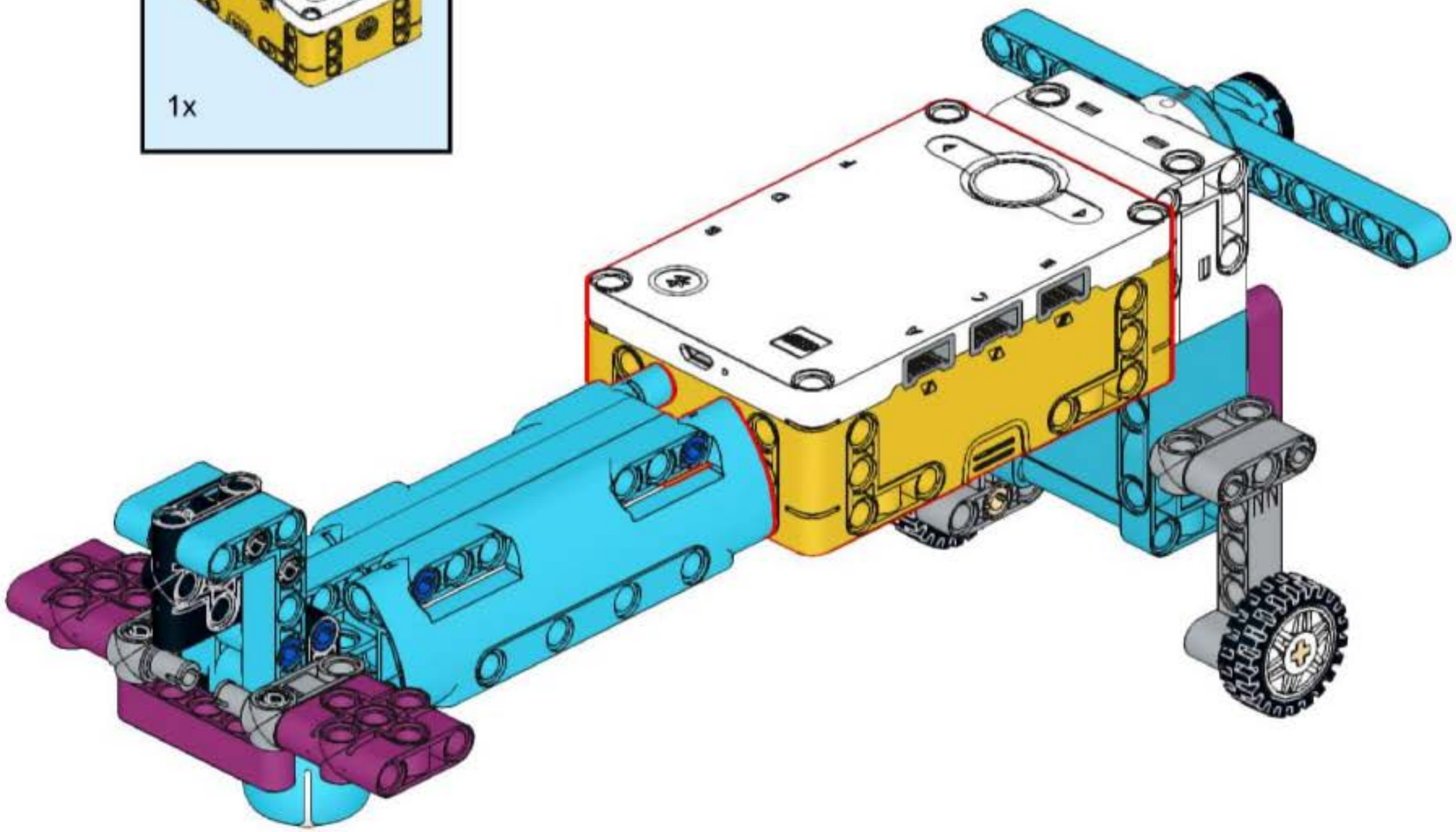

32

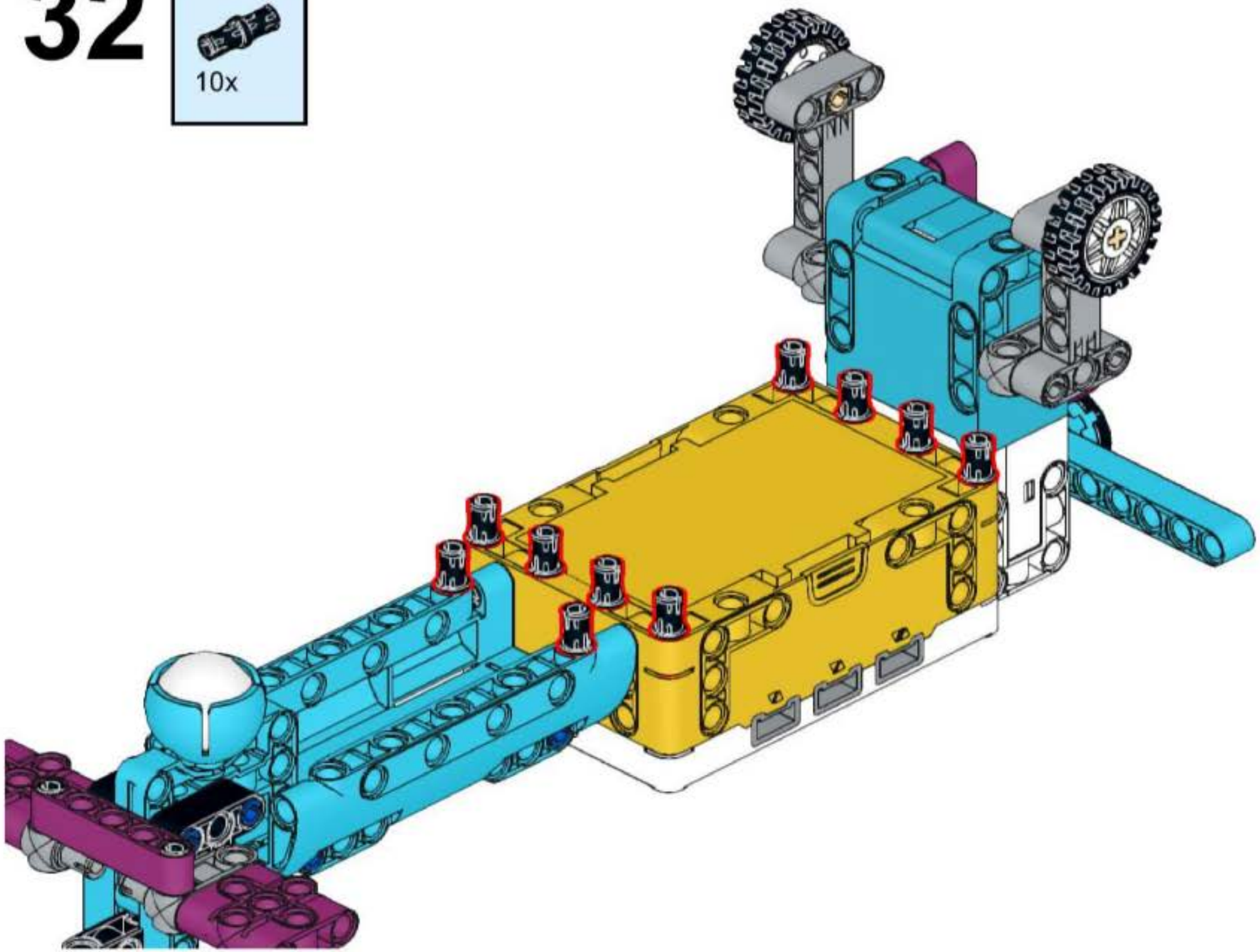

33

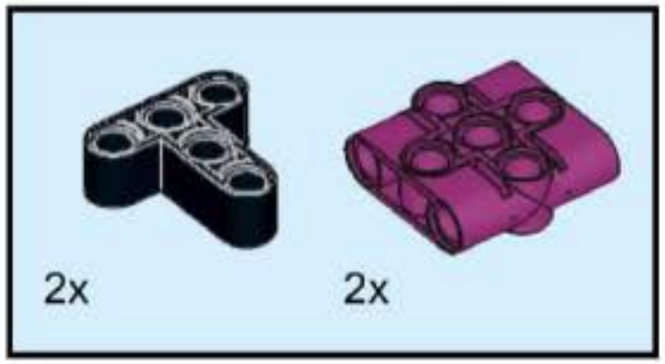

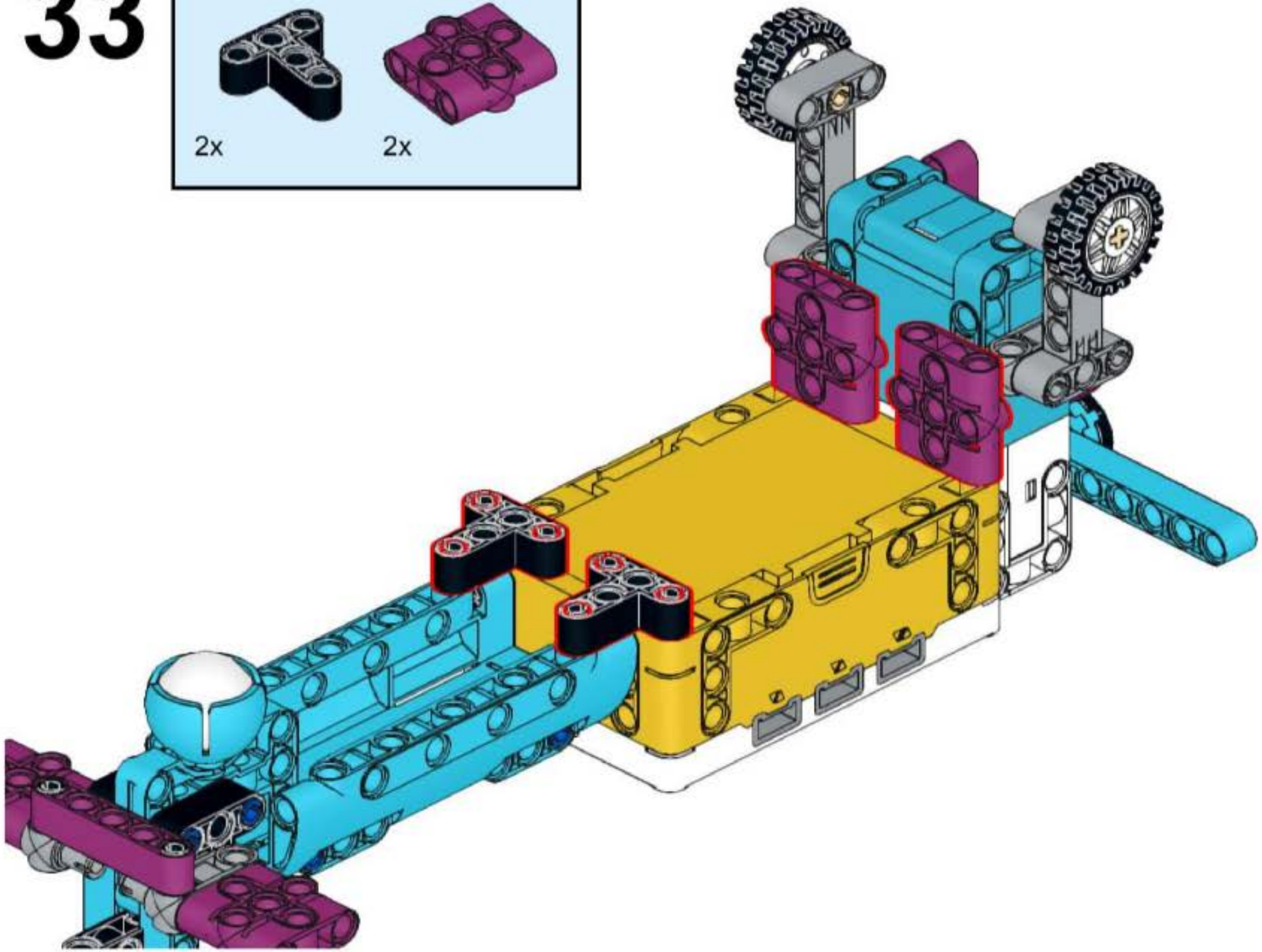

34

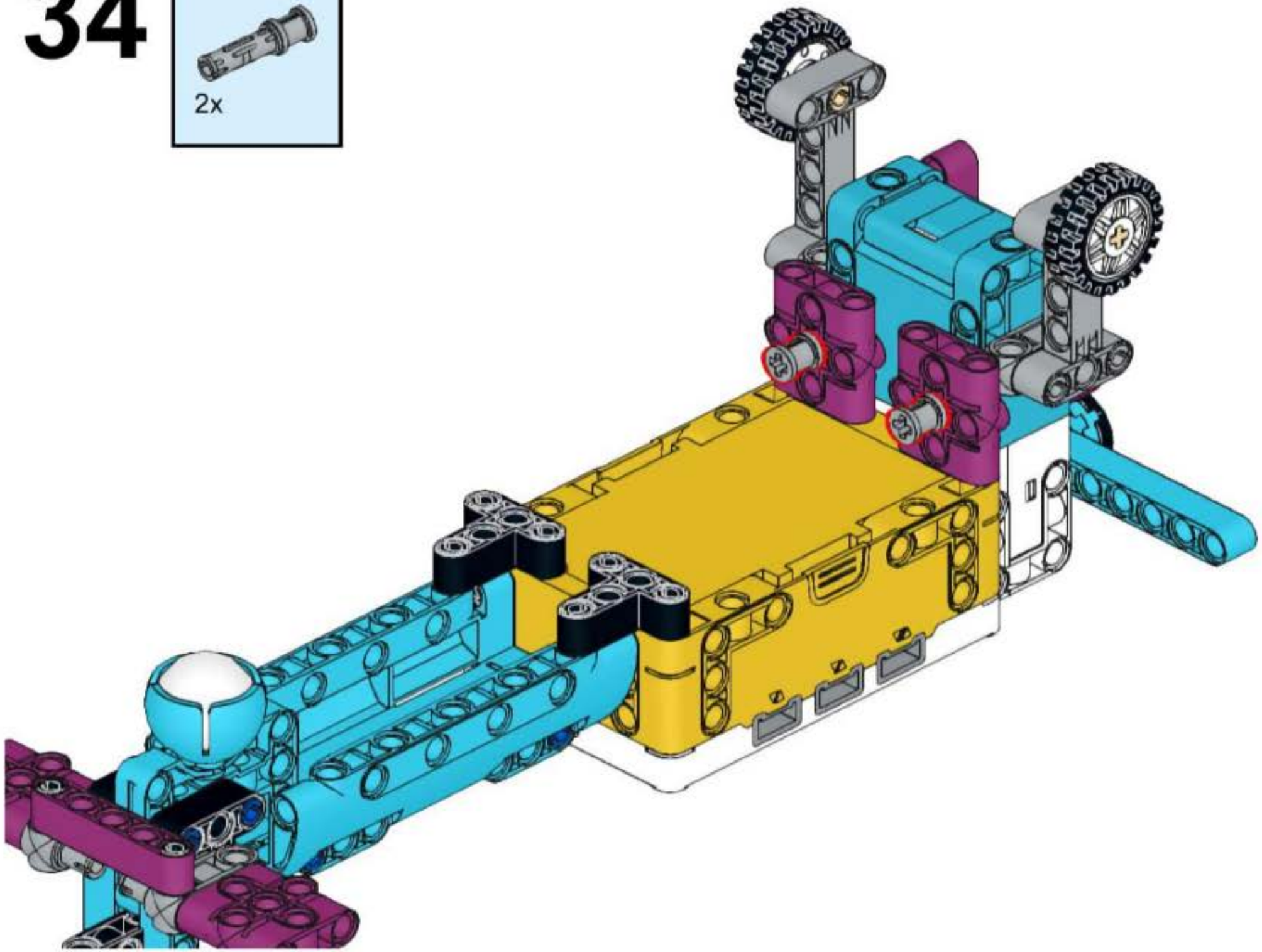

35

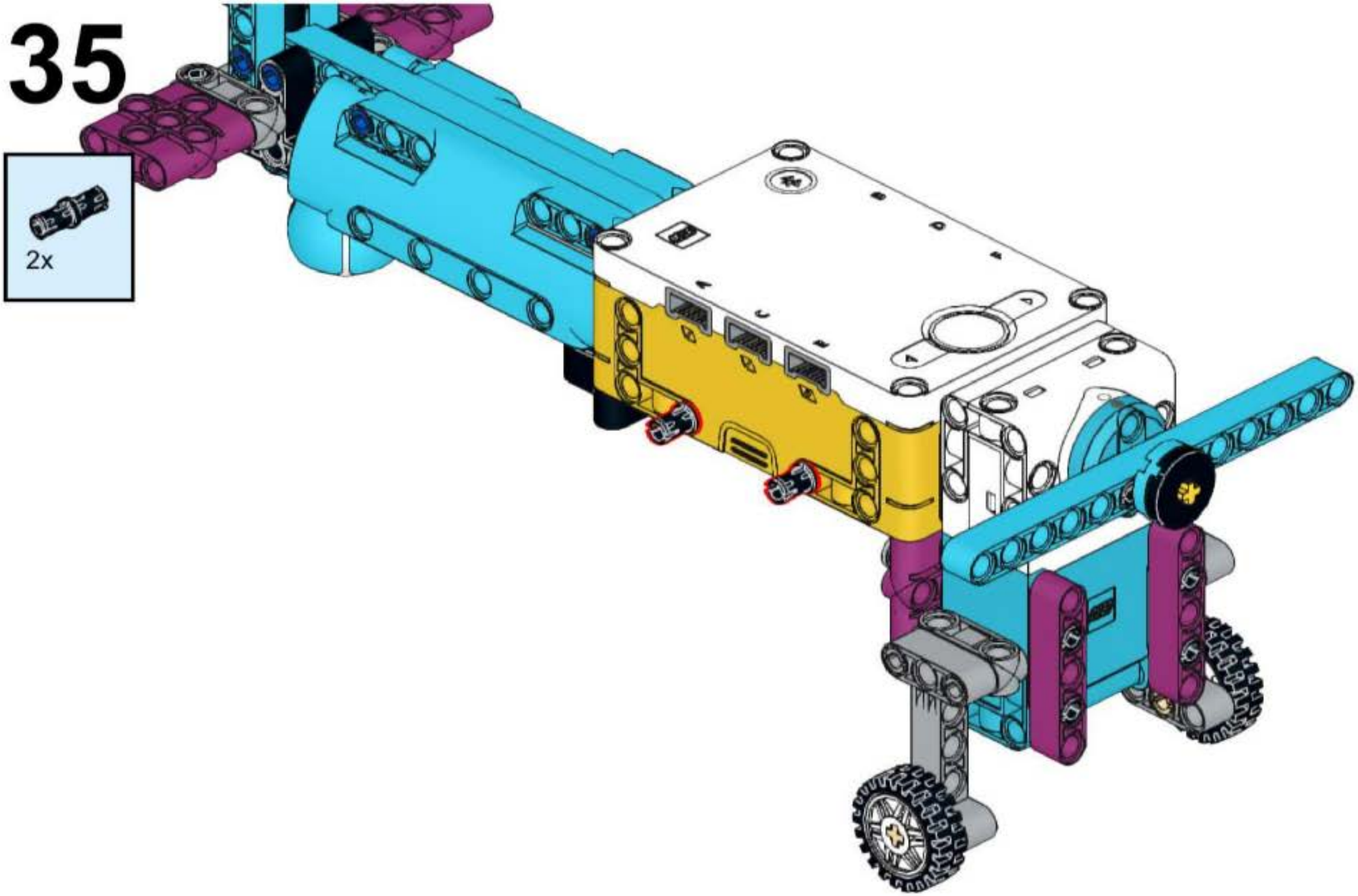

36

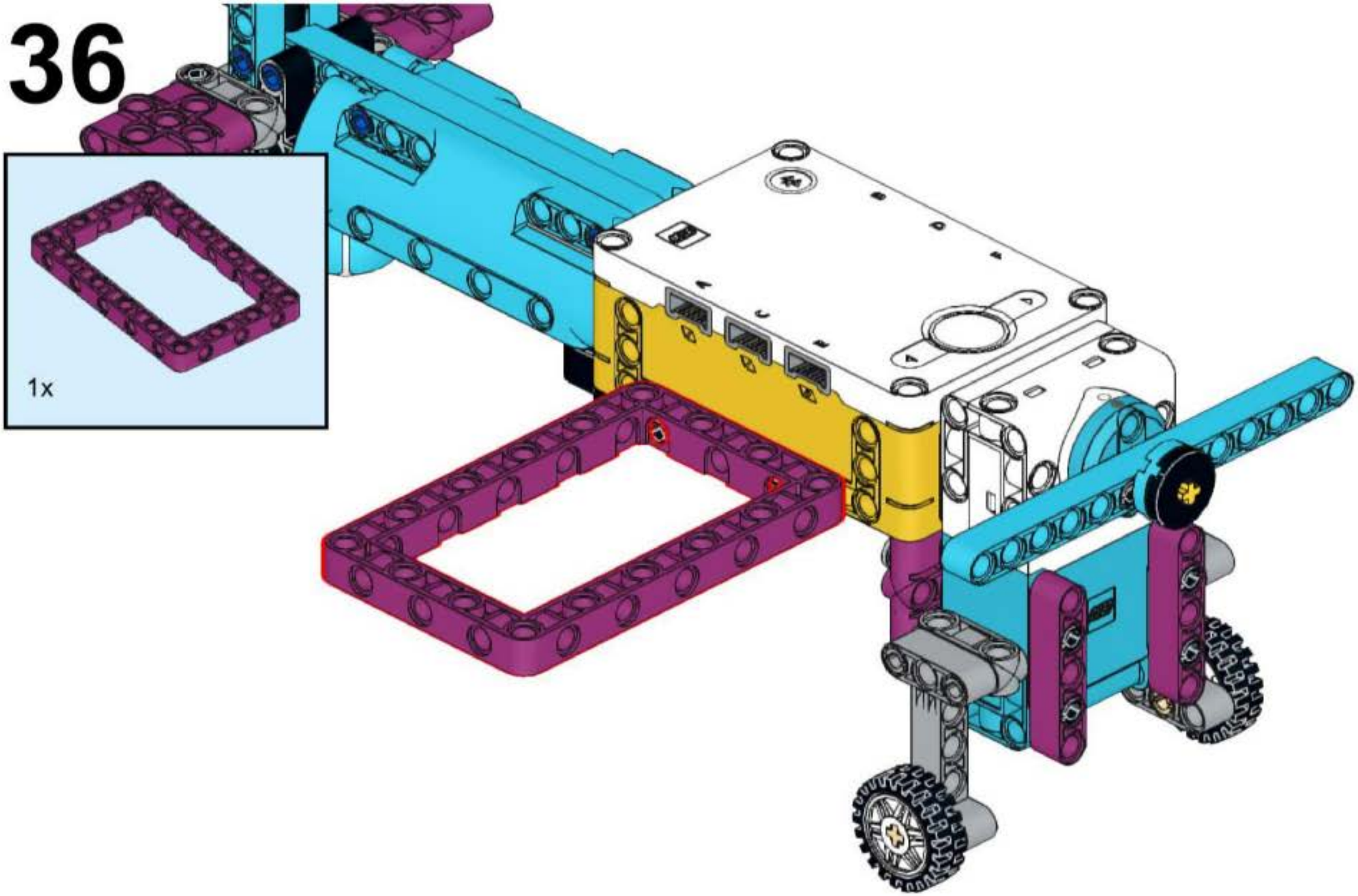

37

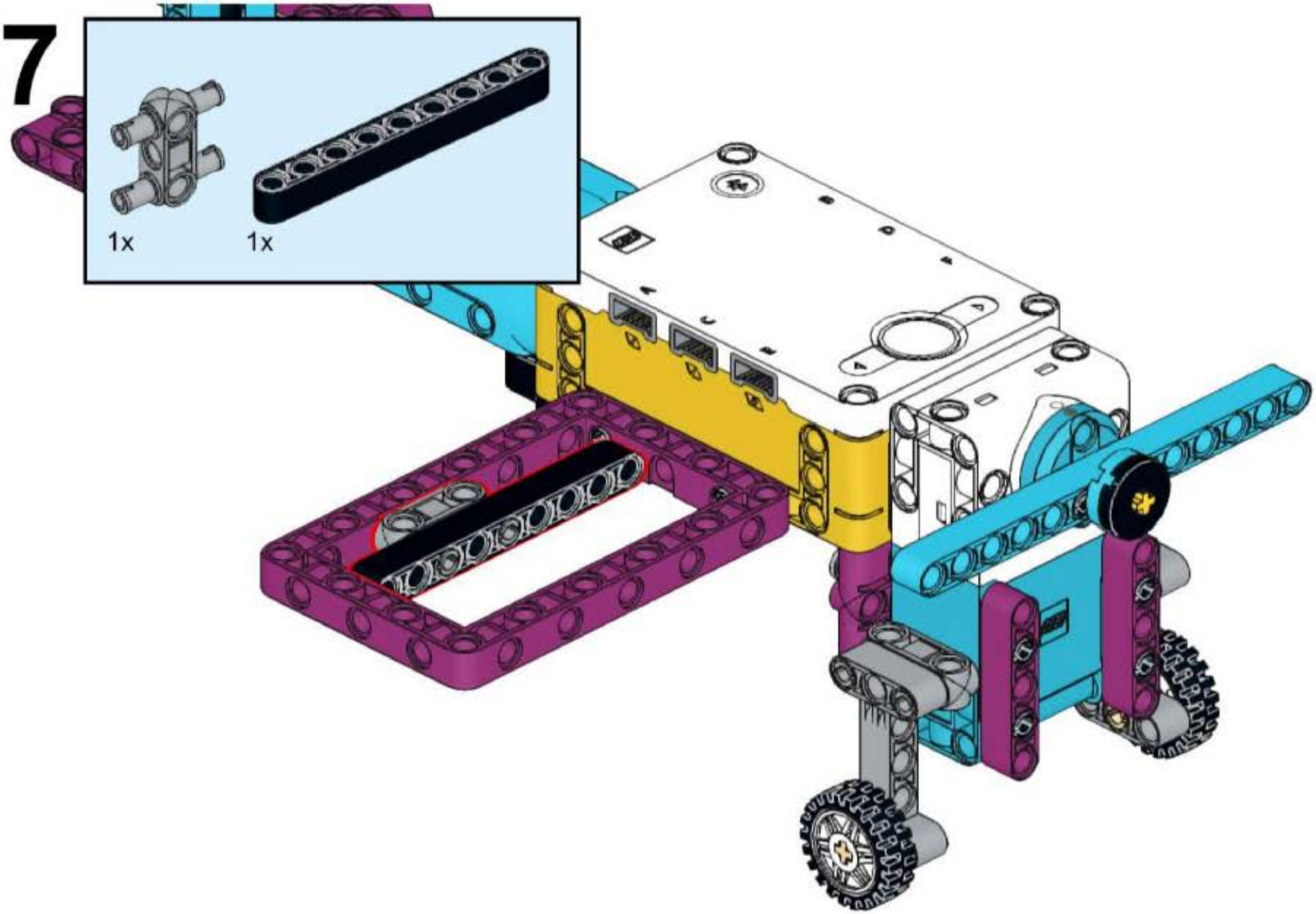

38

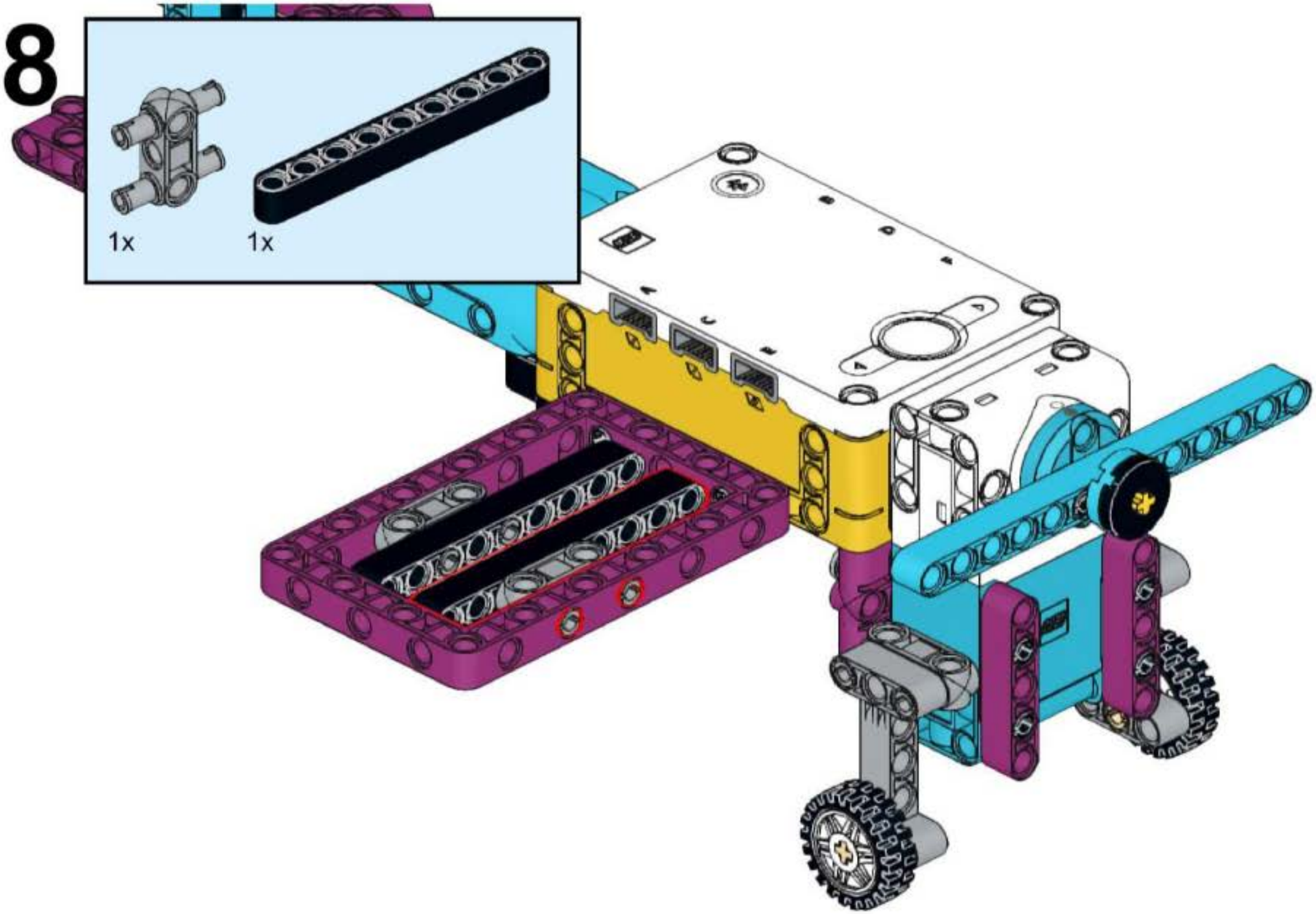

39

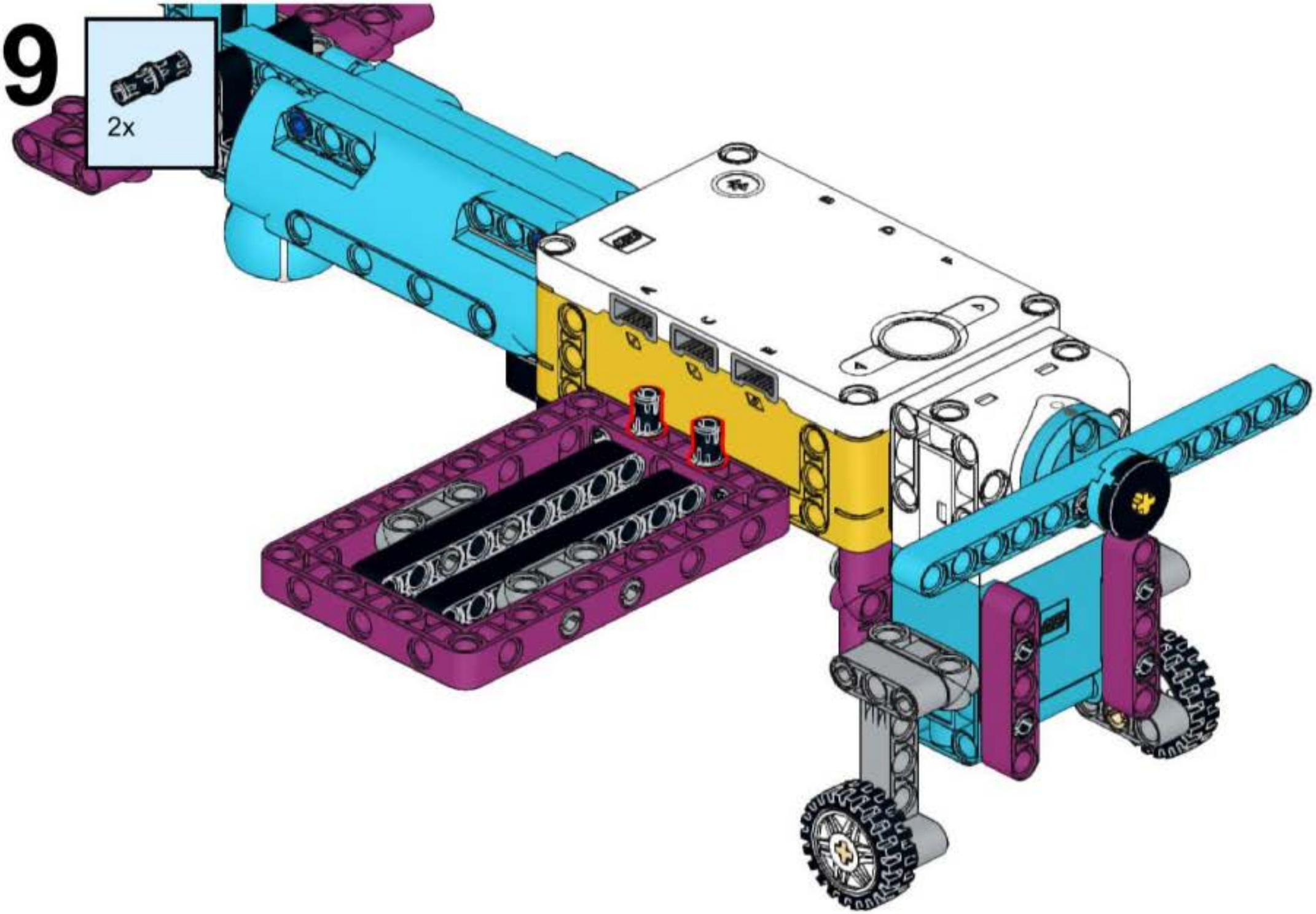

40

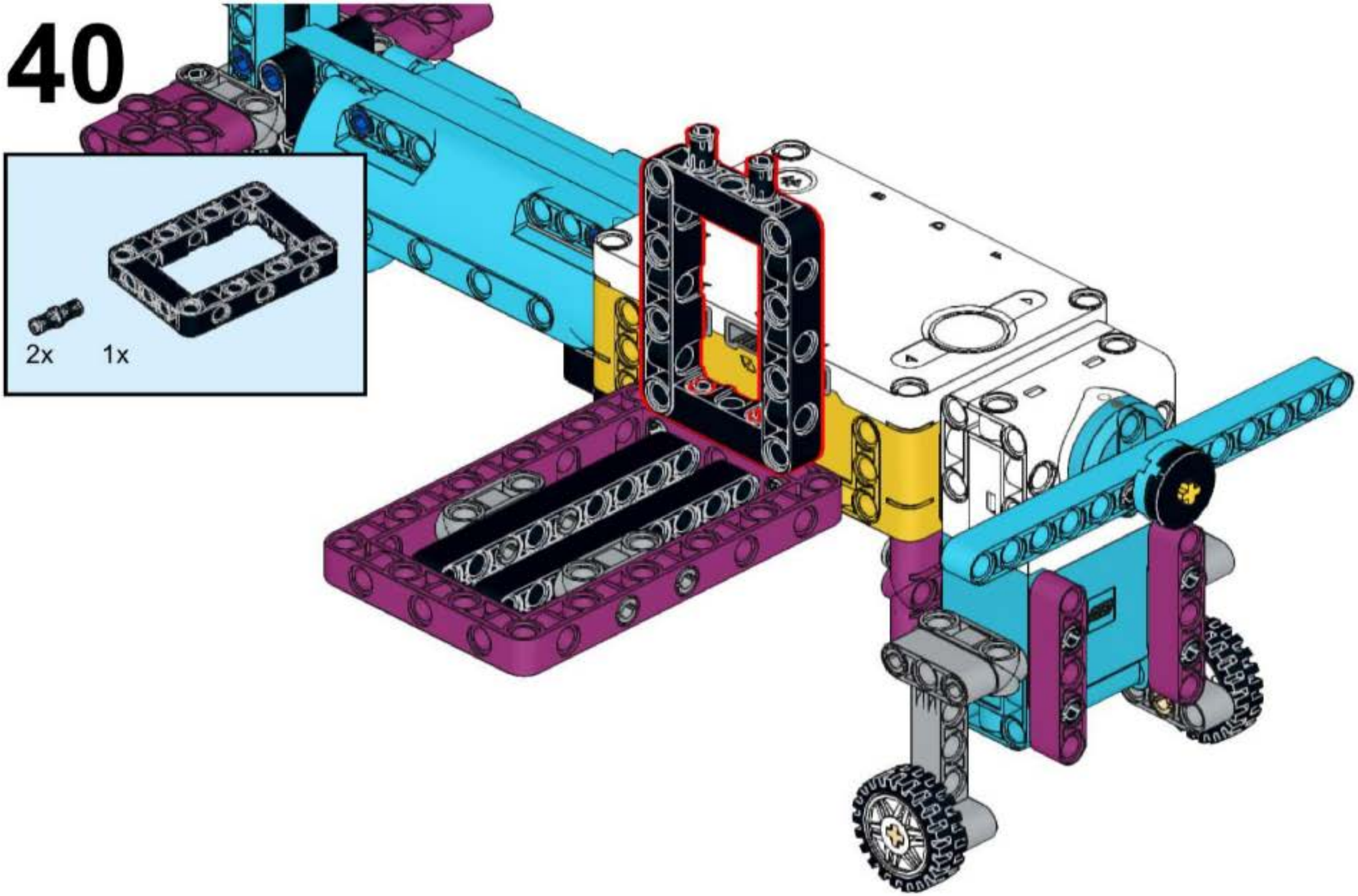

41

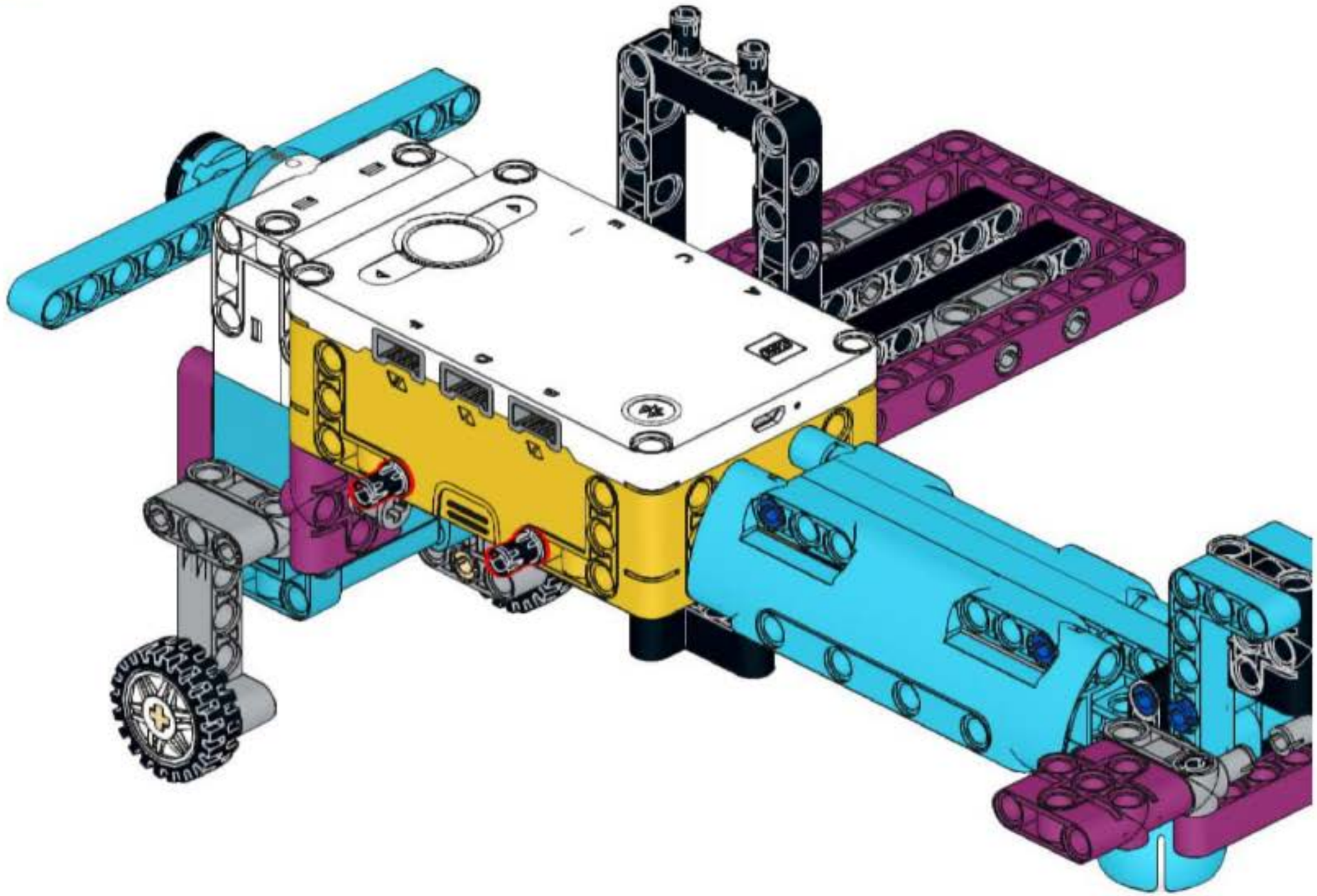

42

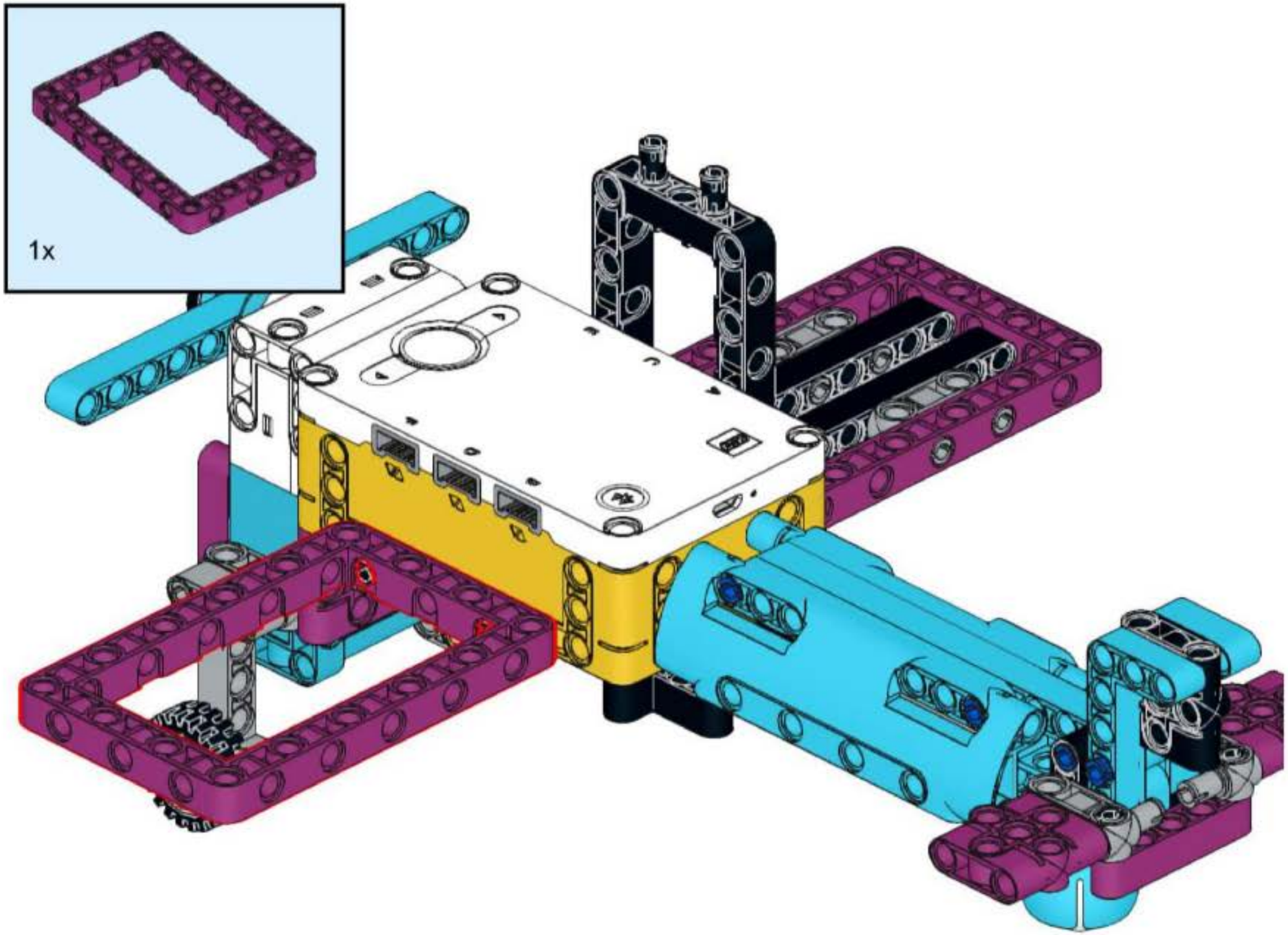

43

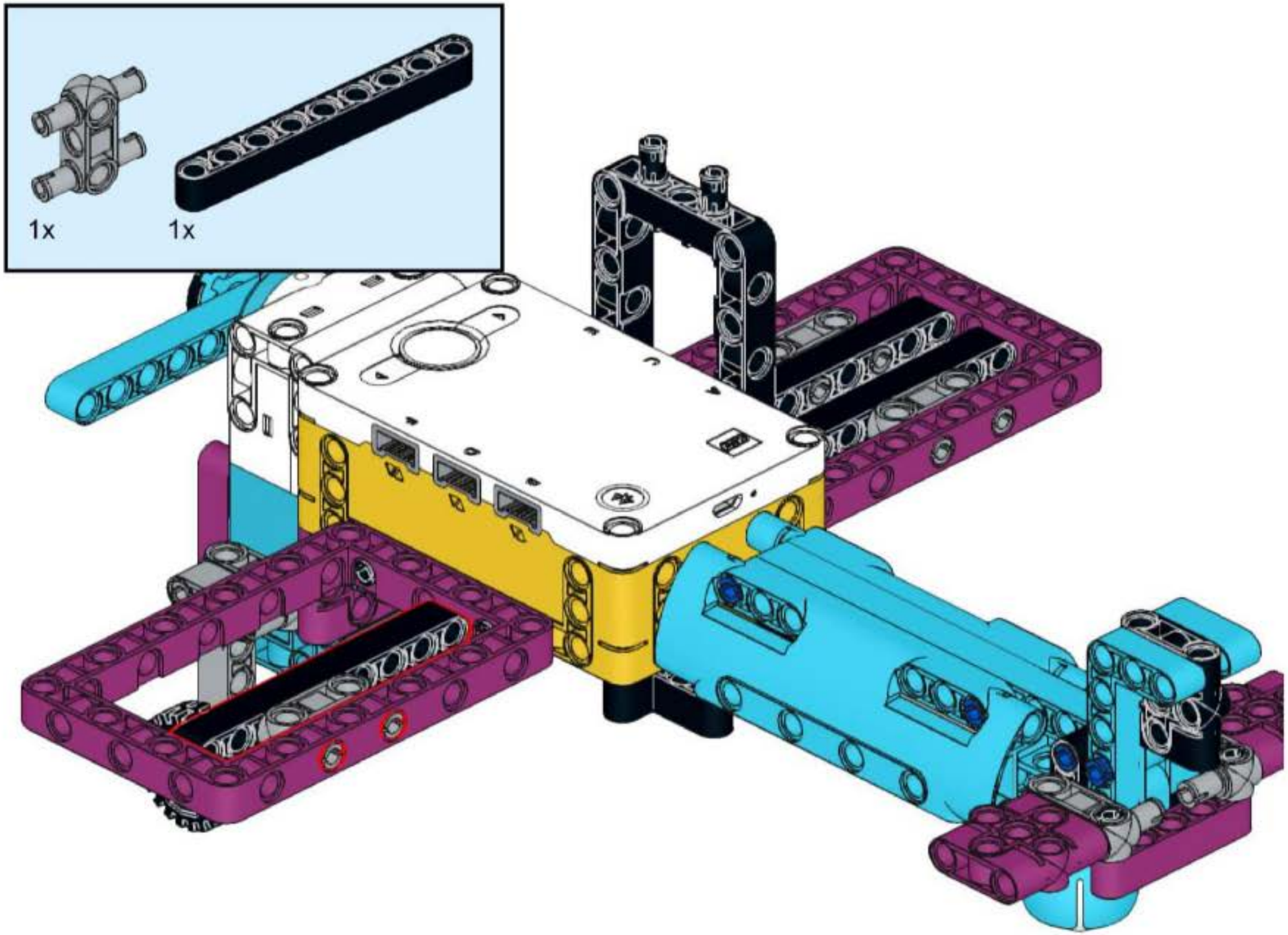

44

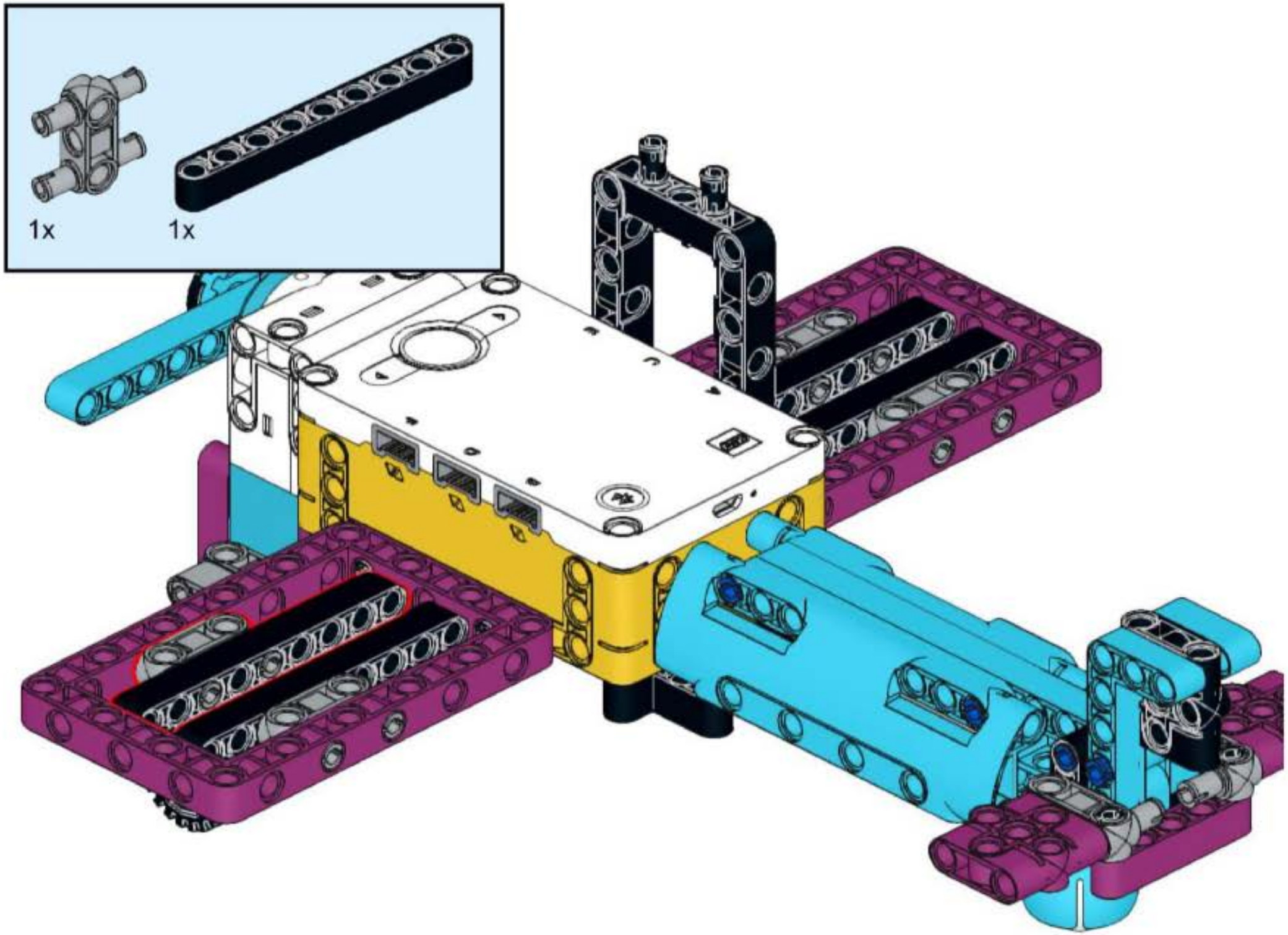

45

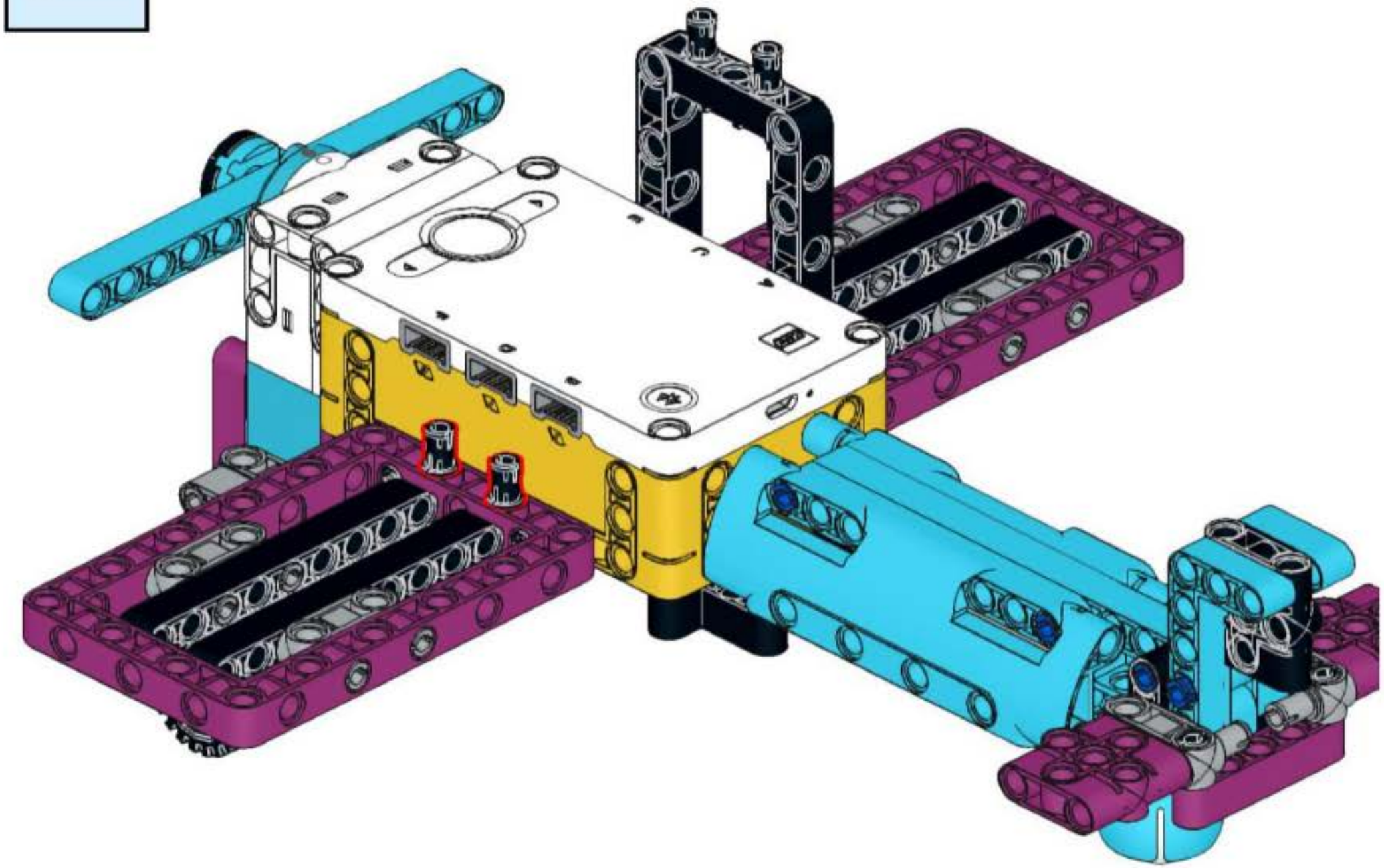

46

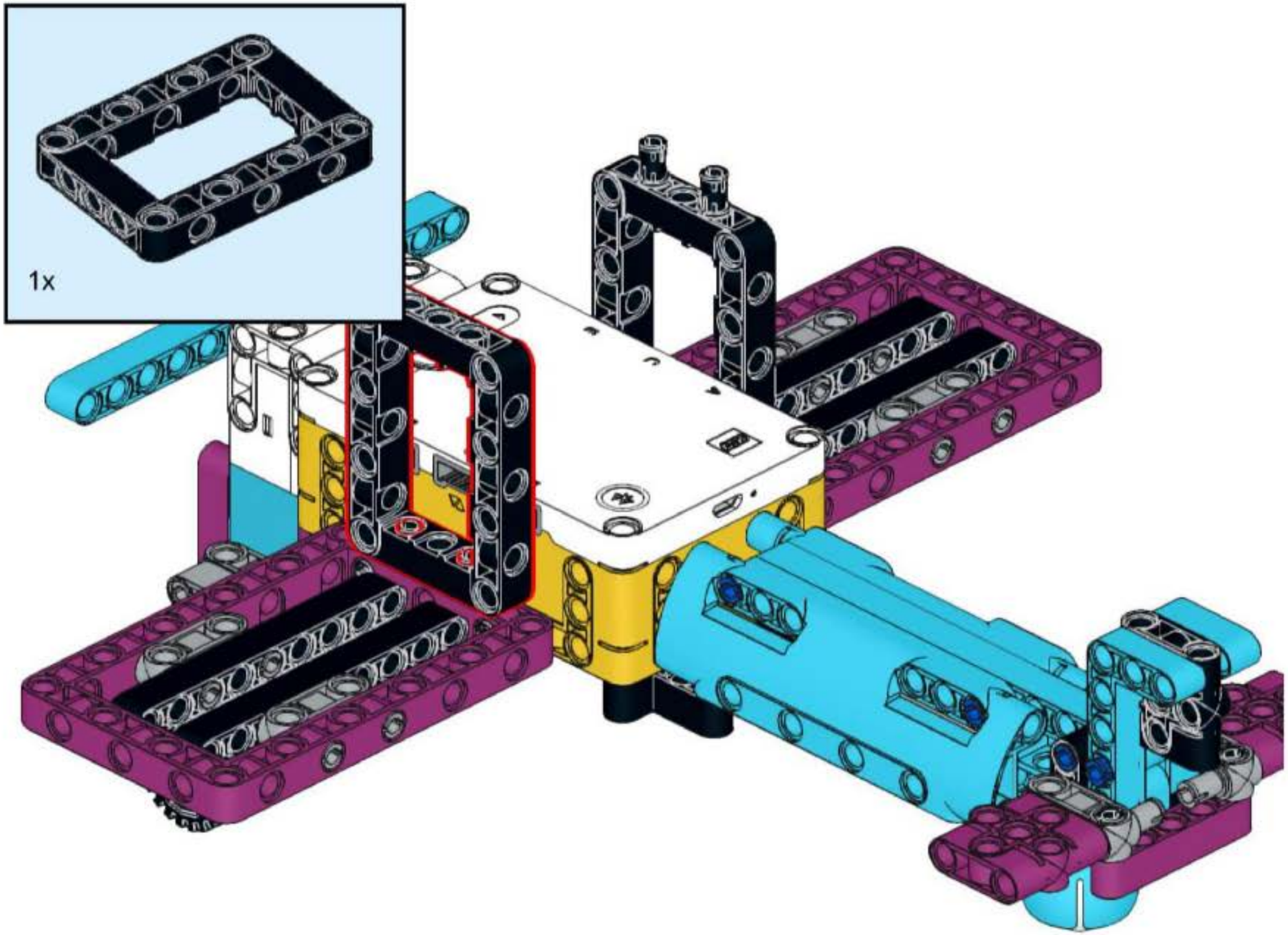

47

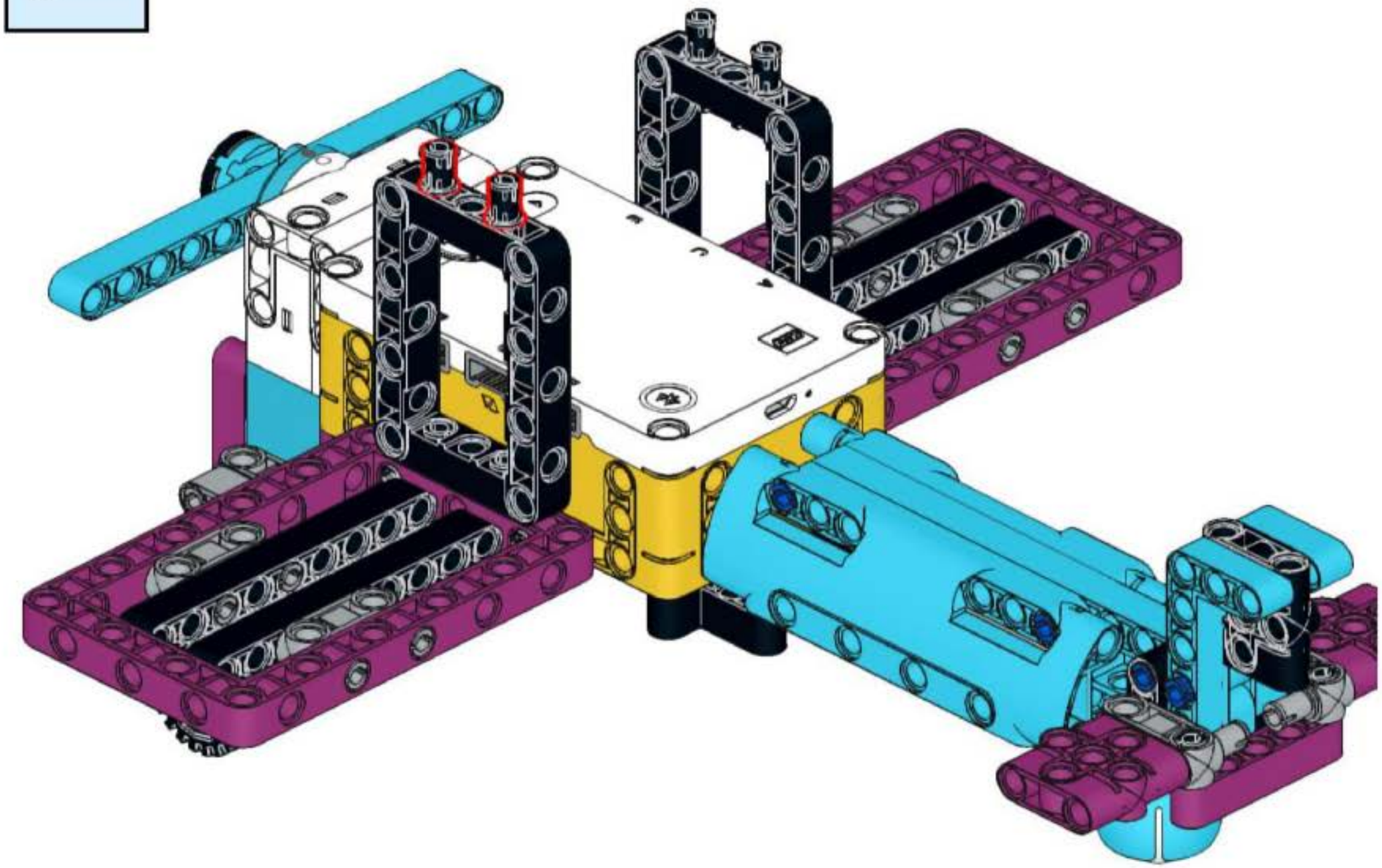

48

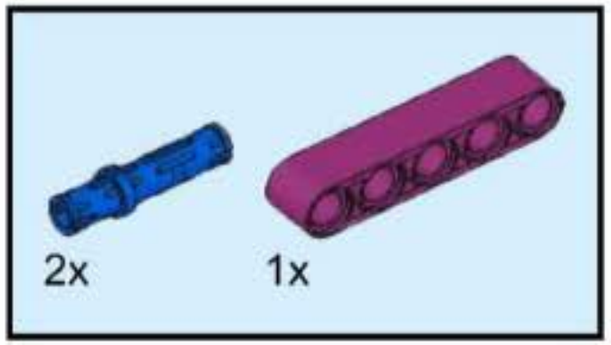

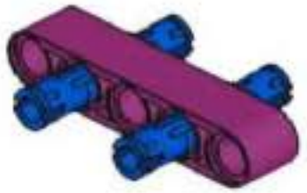

49

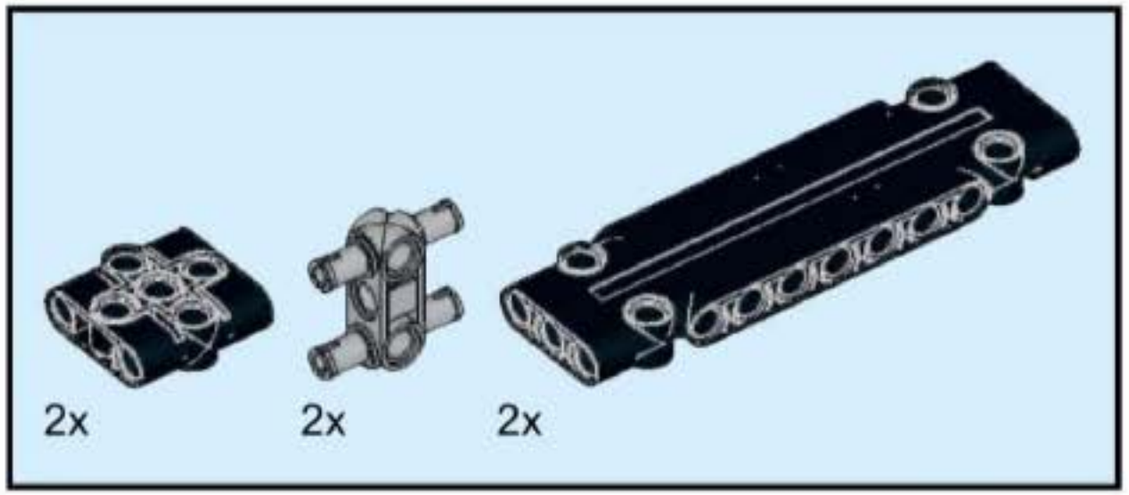

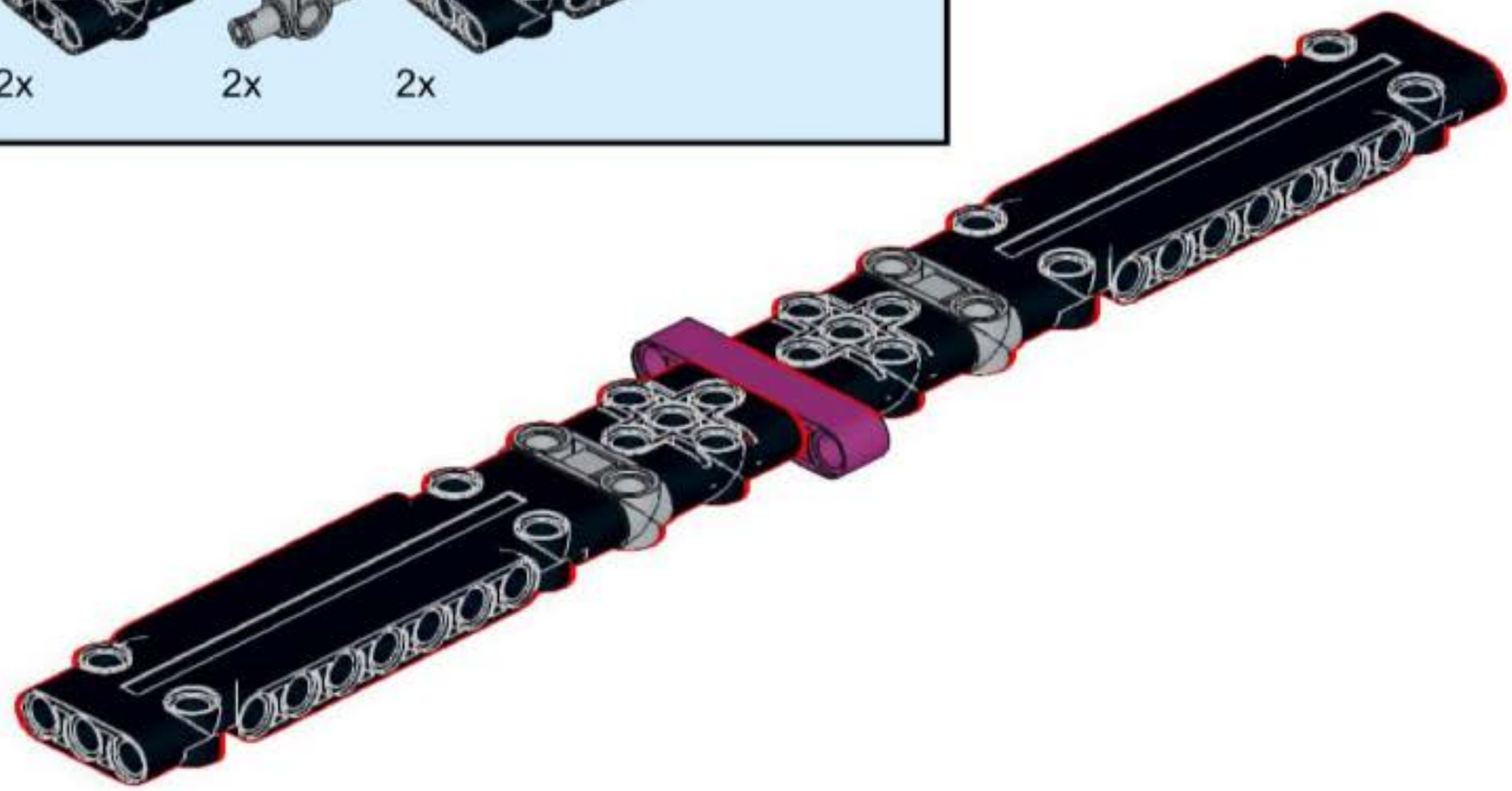

50

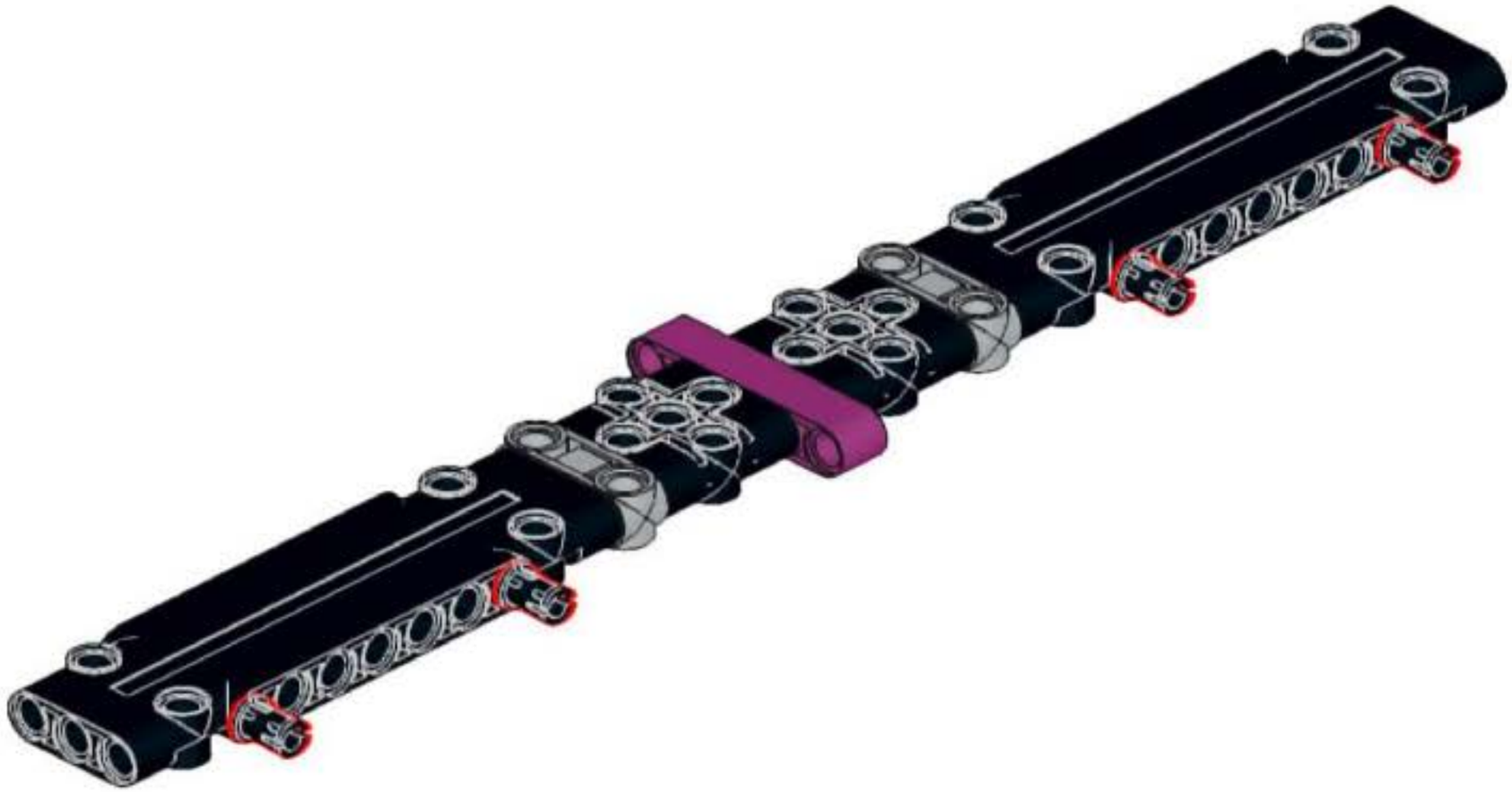

51

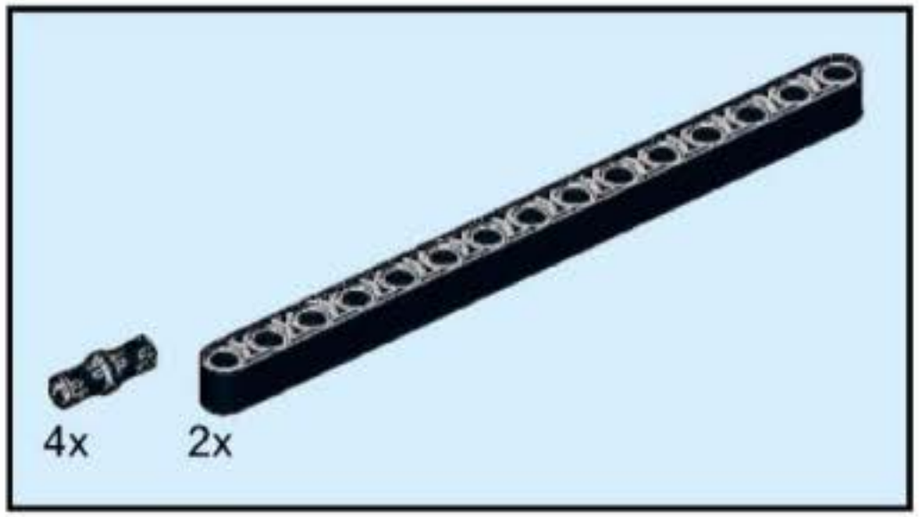

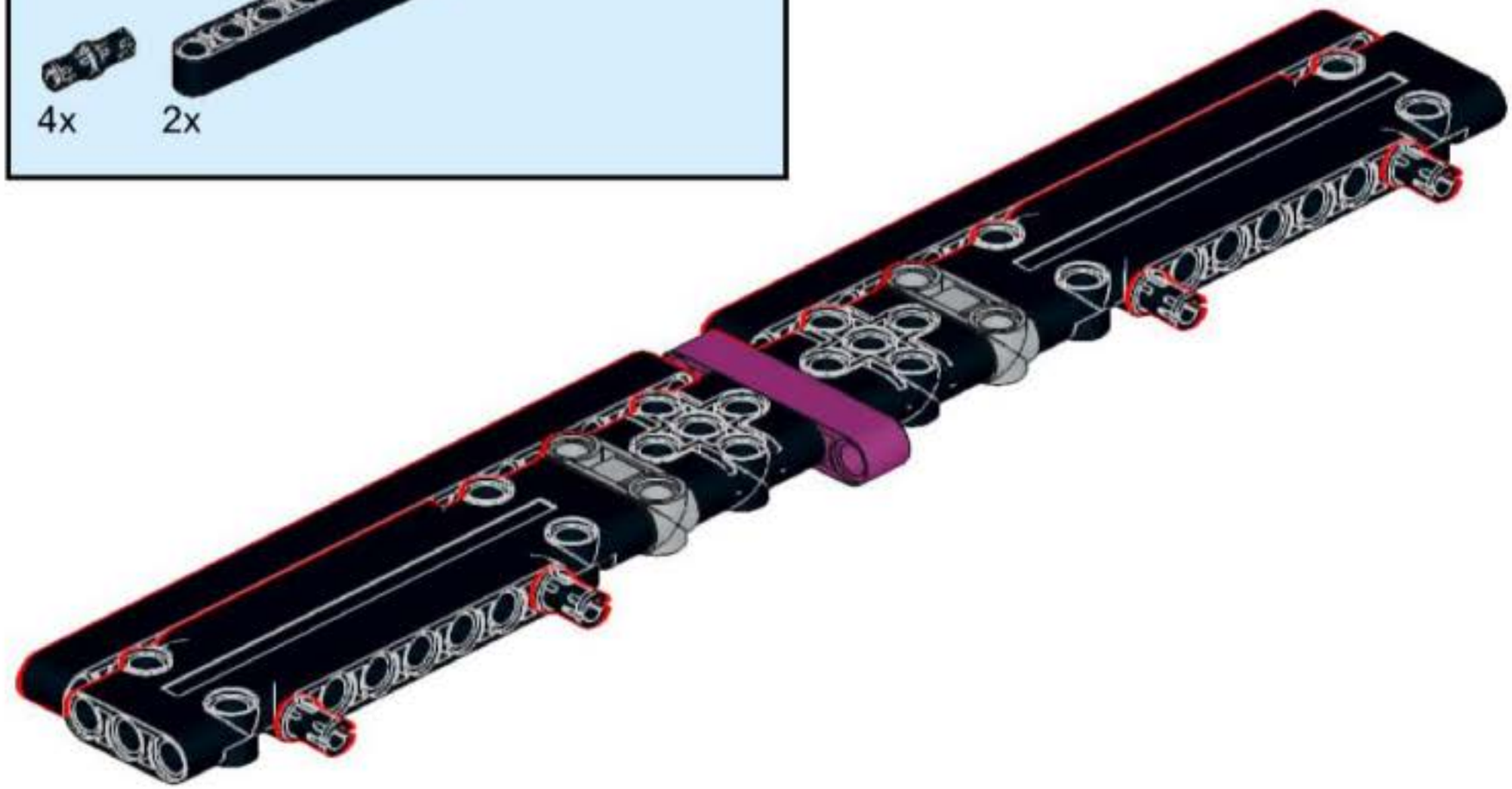

52

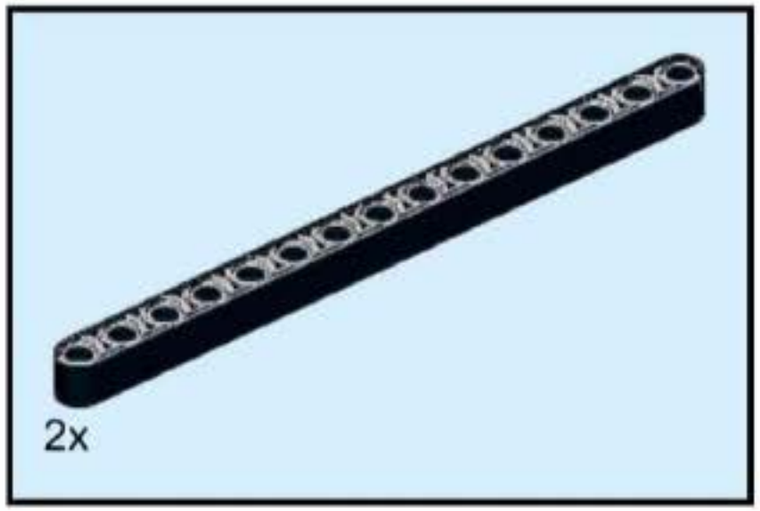

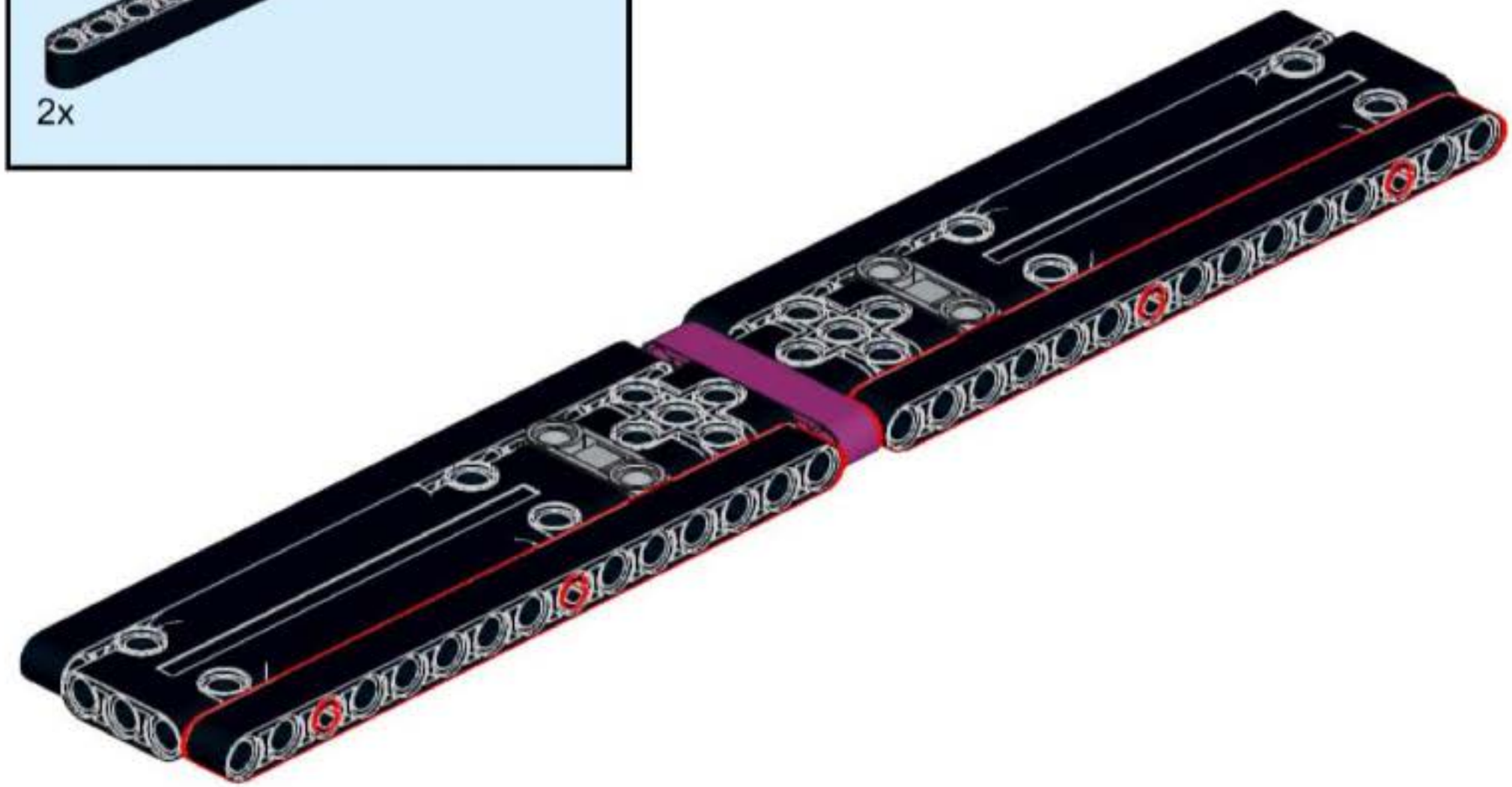

53

54

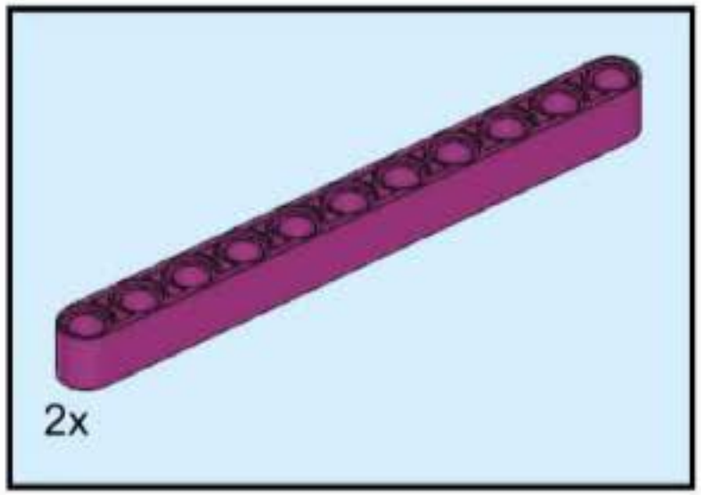

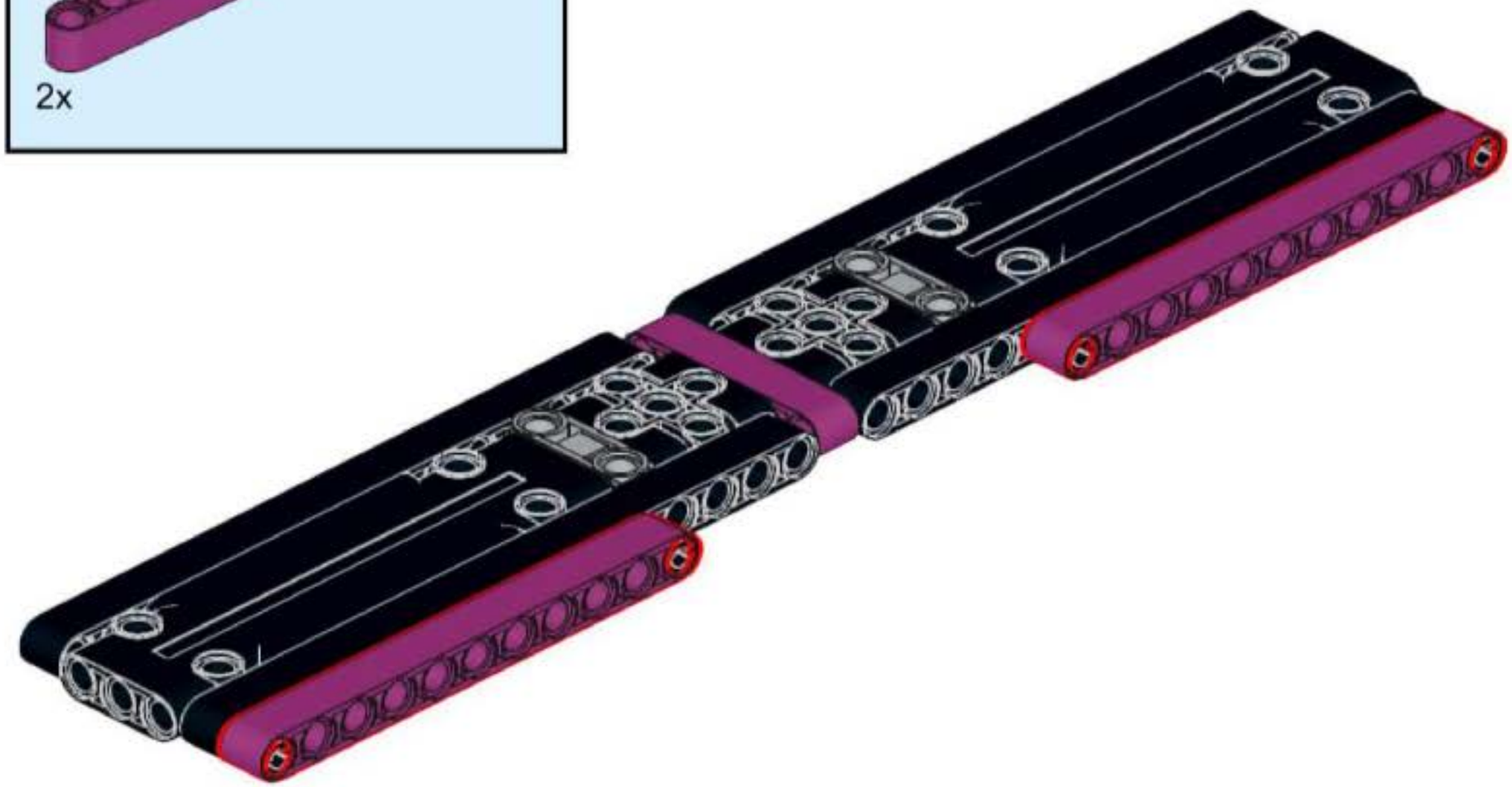

55

56

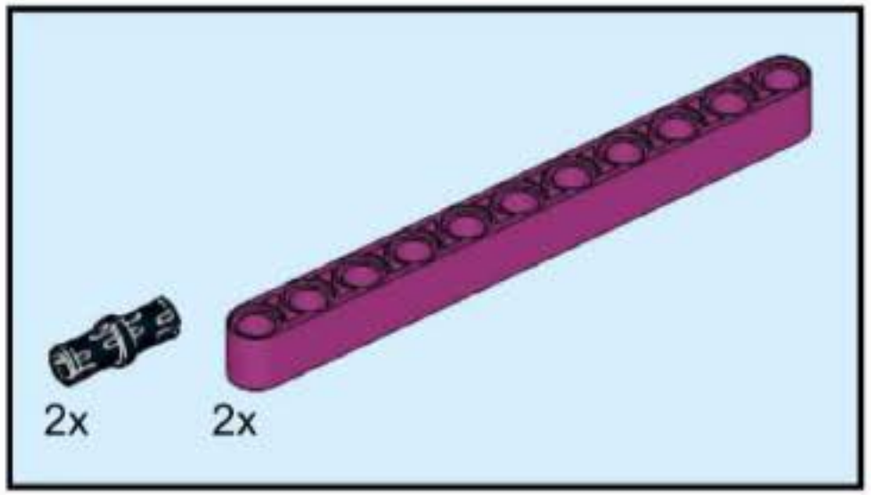

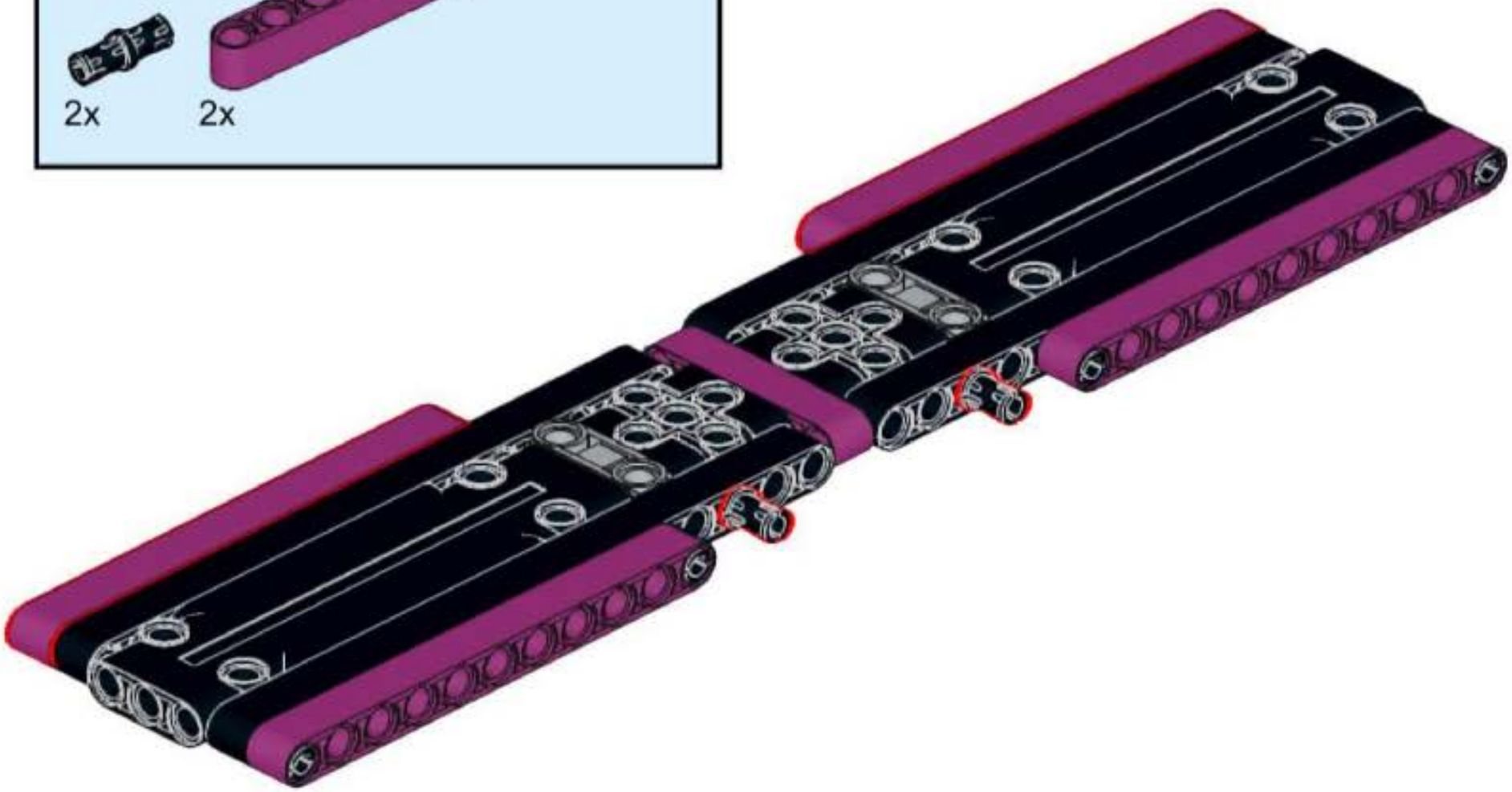

57

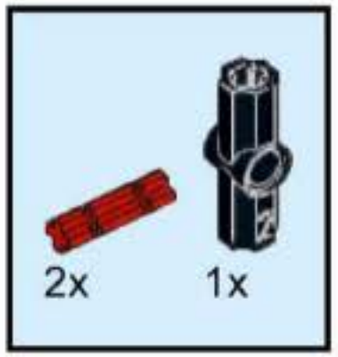

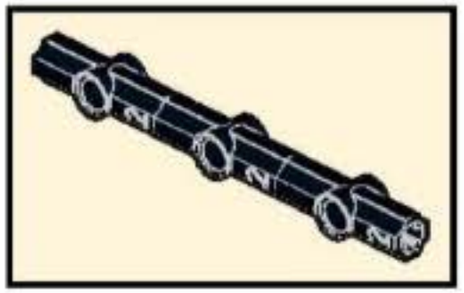

58

59

60

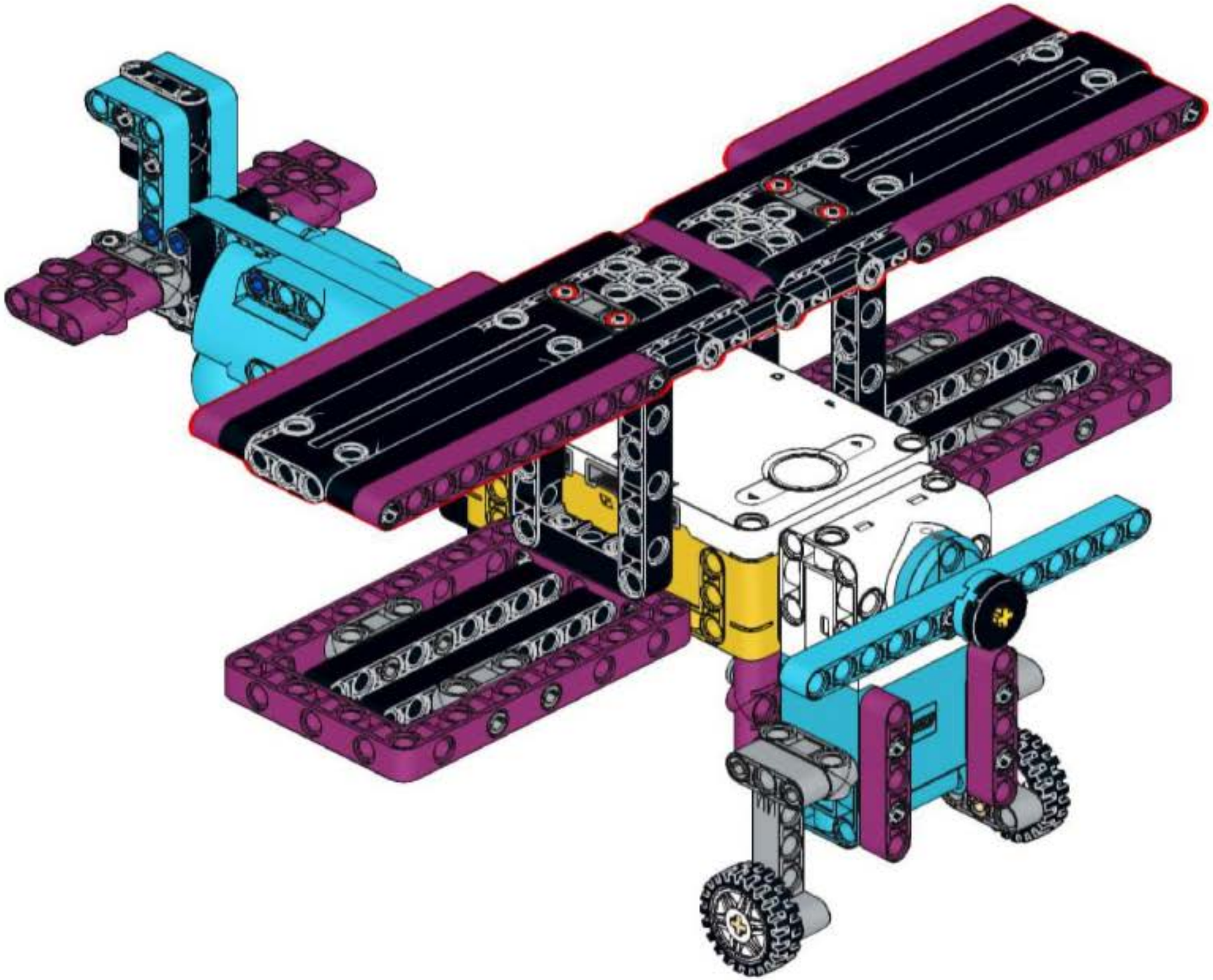

61

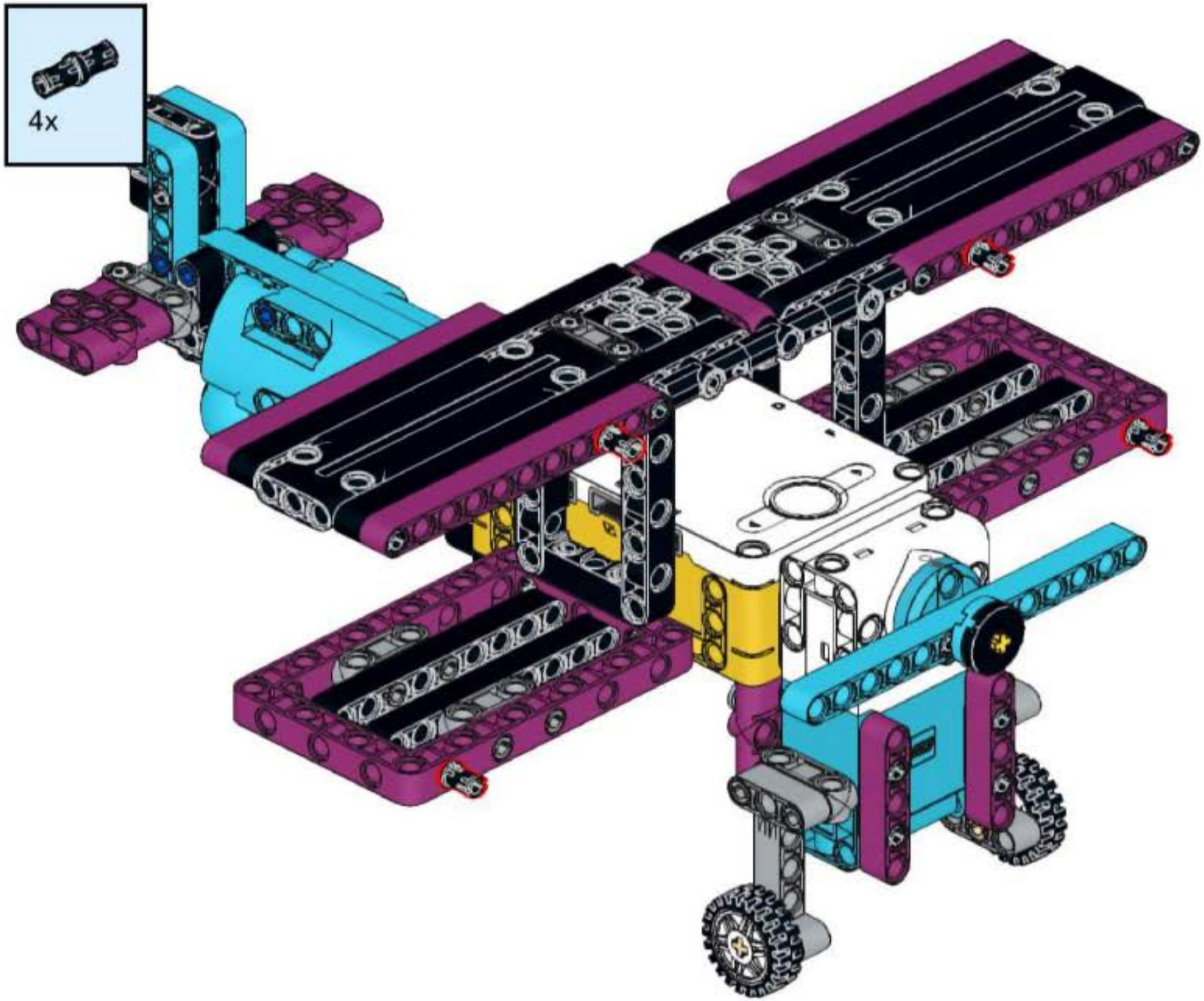

62

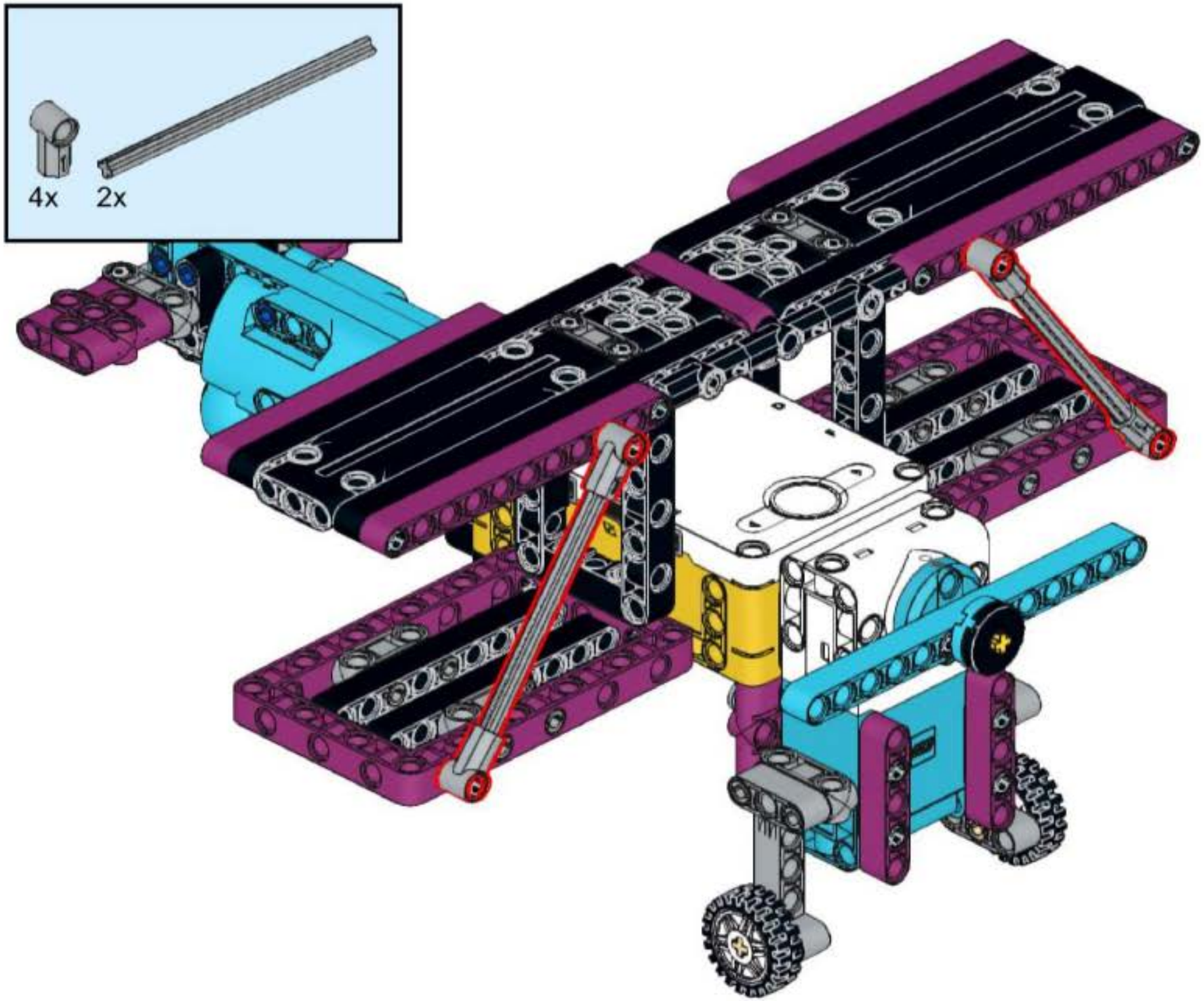

63

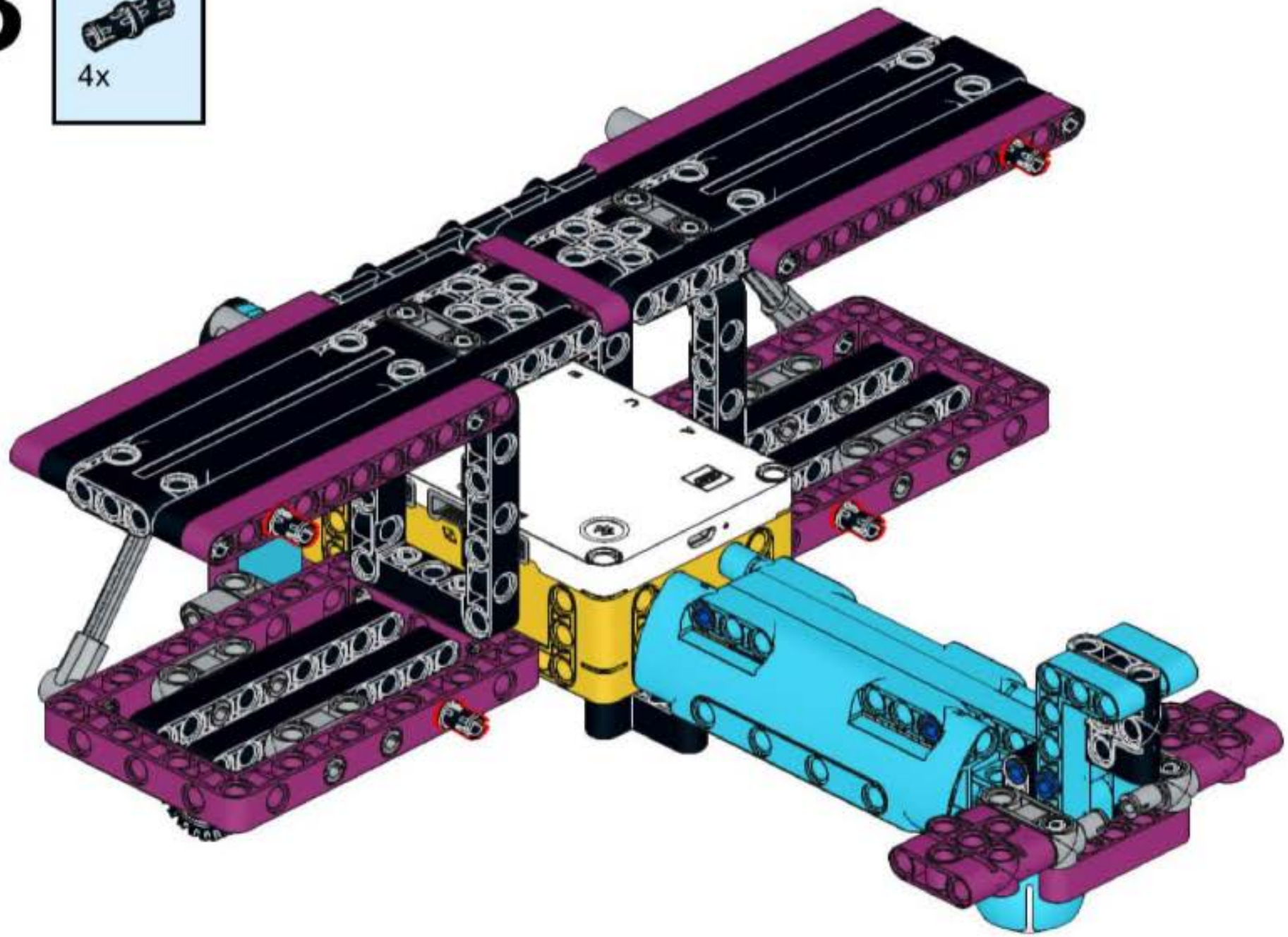

64

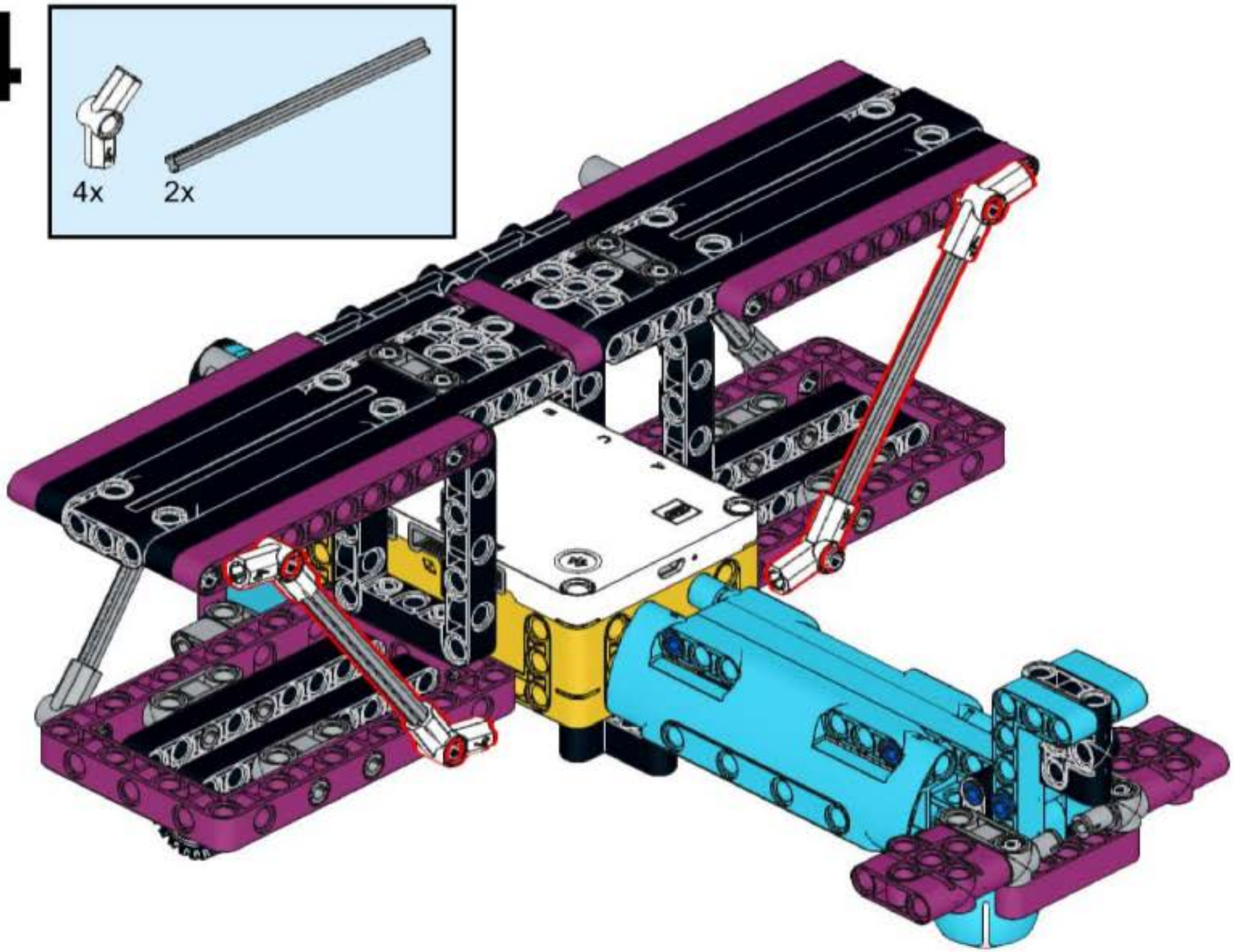

65

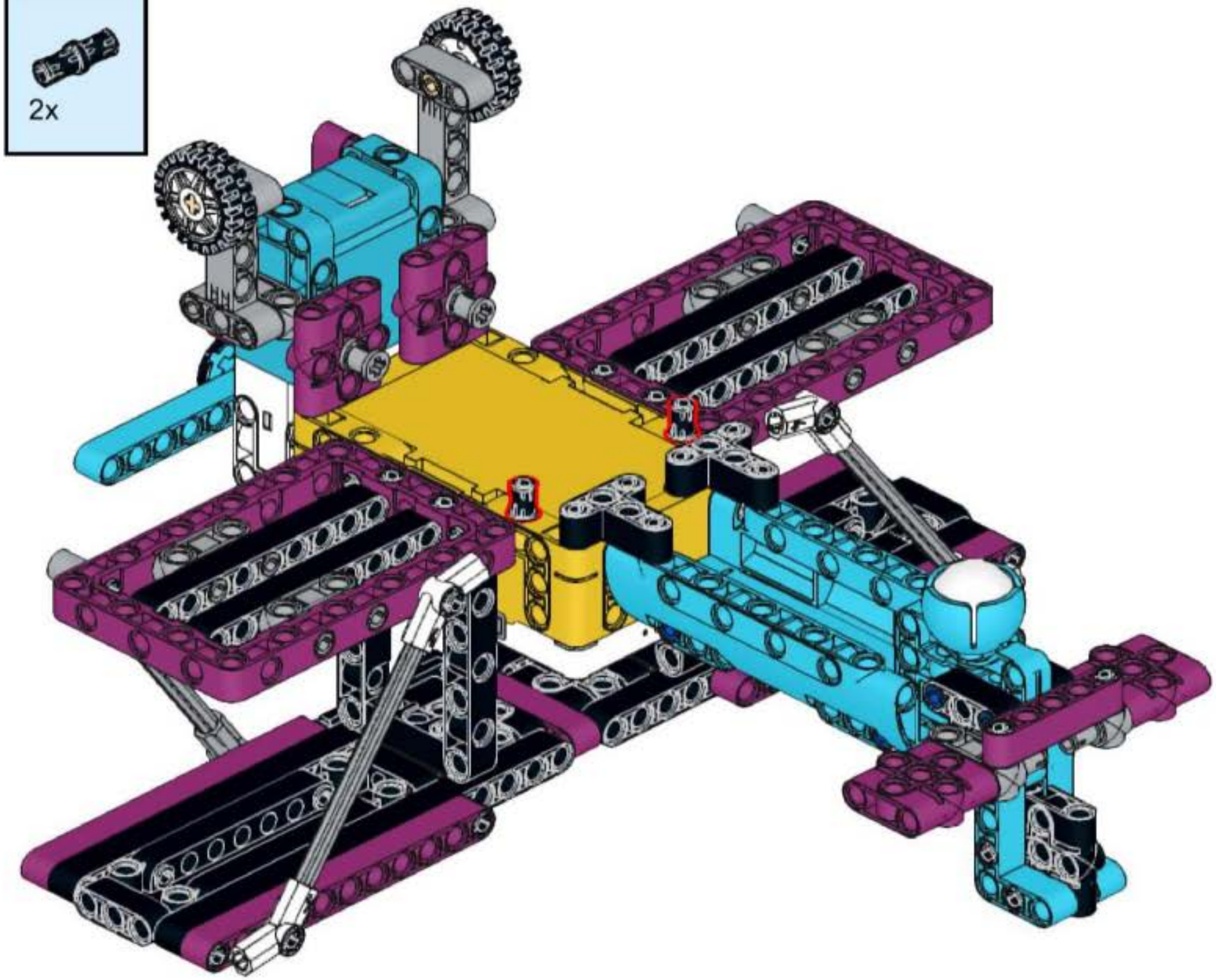

66

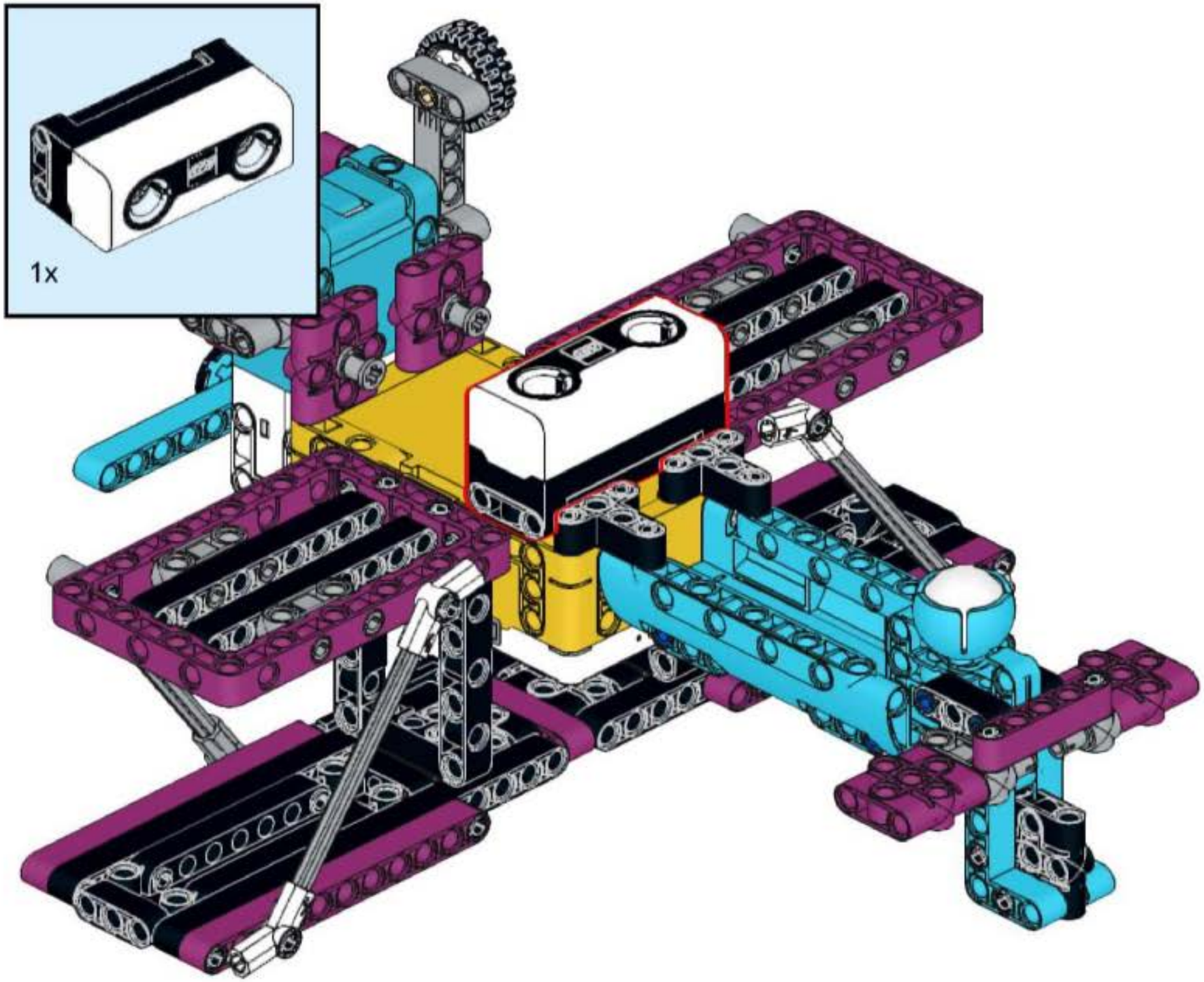

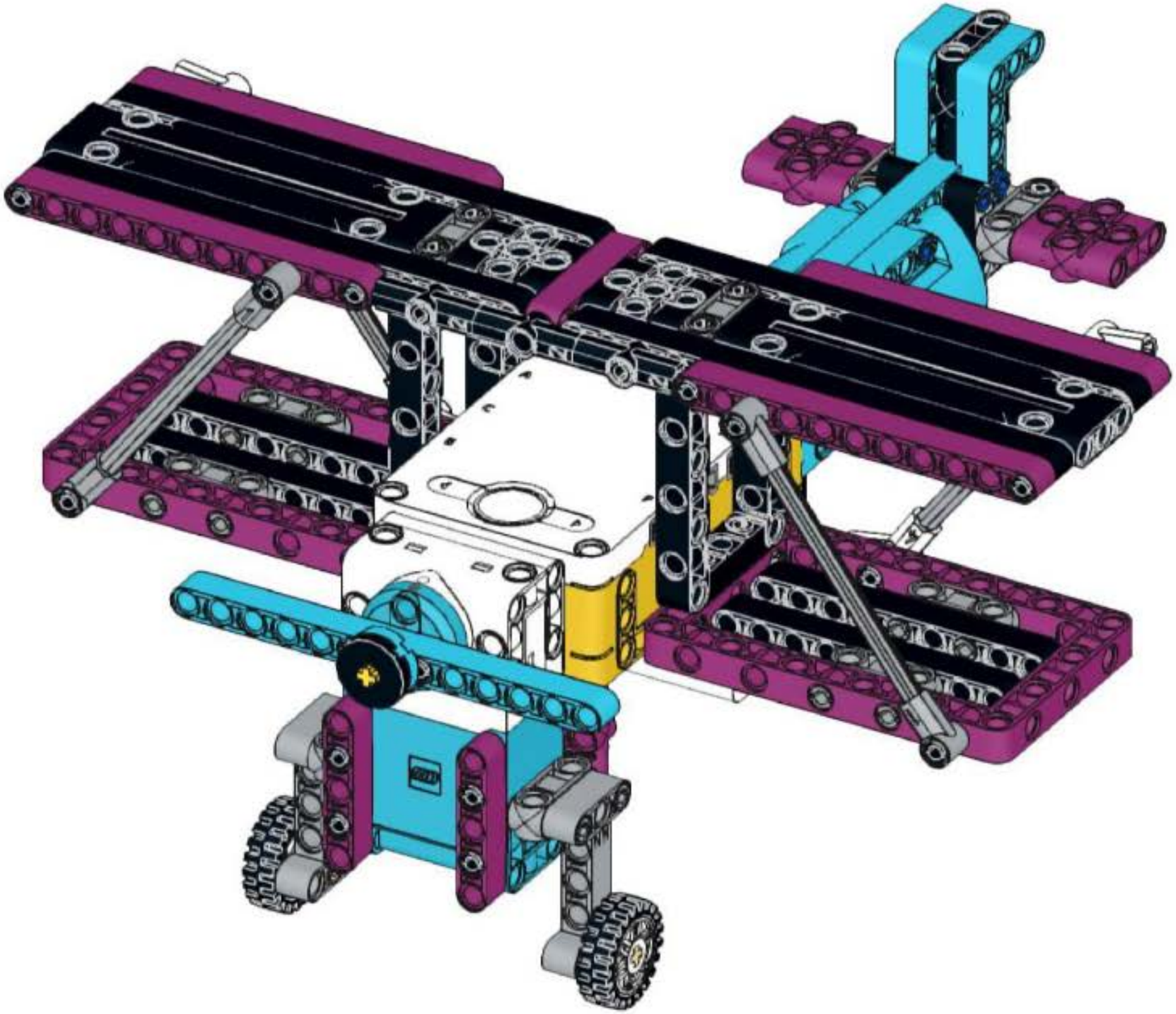

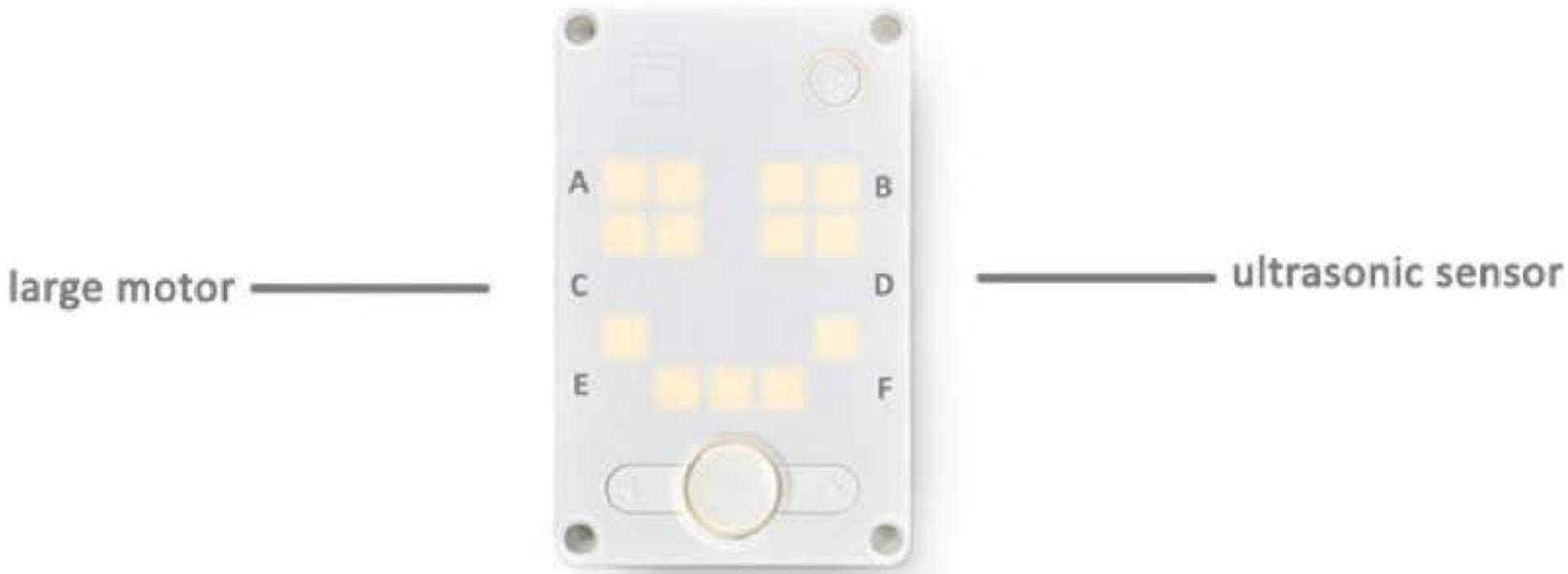
A
B
C
D
E
F
large motor
ultrasonic sensor

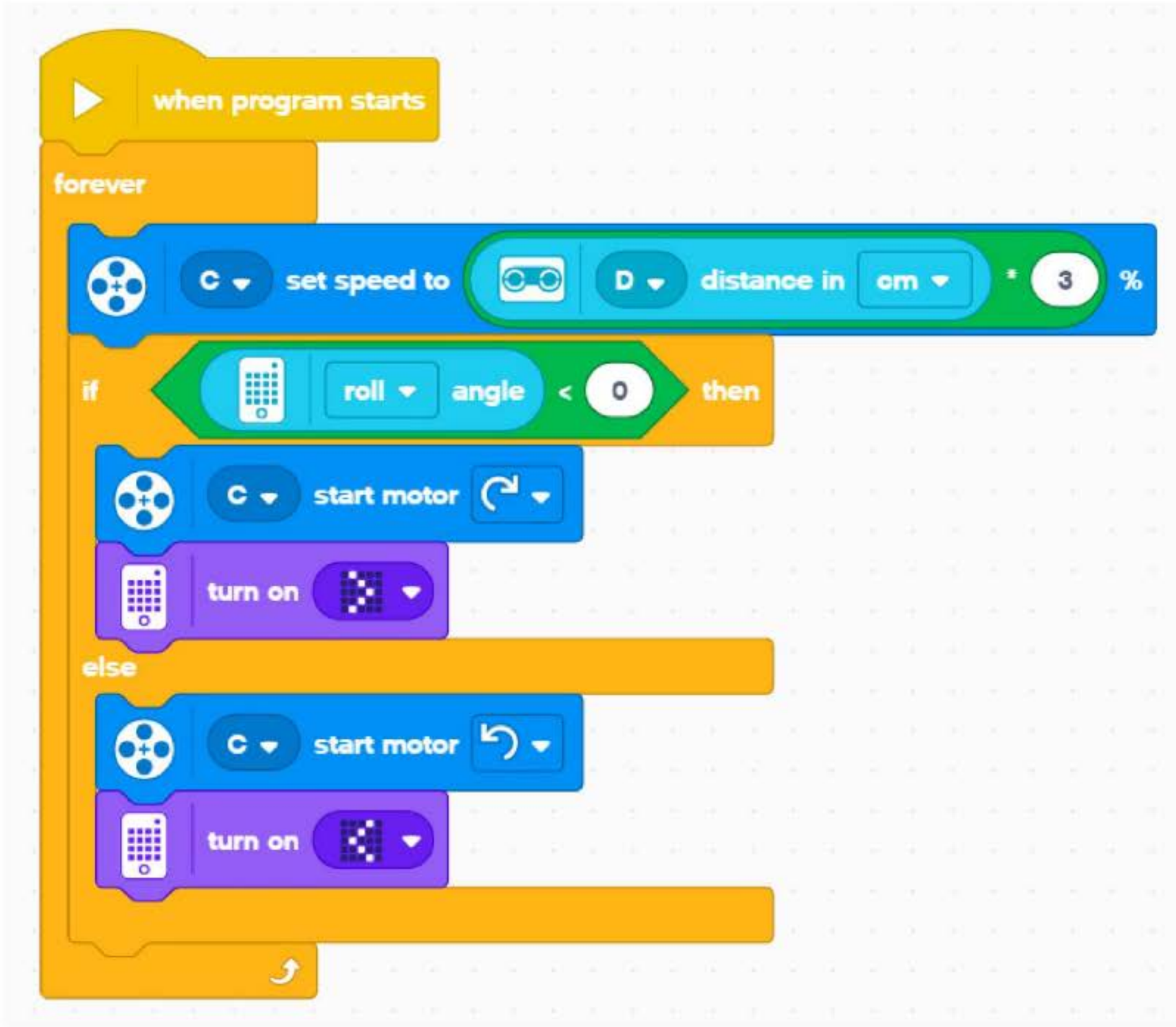
when program starts
forever
C
set speed to
D
distance in
cm
*
3
%
if
roll
angle
<
0
then
C
start motor
turn on
else
C
start motor
turn on