ECN:	Revision:	Description:	Date:	Revised By:
	1	Initial Design	8/21/25	ALI RAHIMI

5V SWITCHING REG/CURRENT SENSE/OUTPUT TO VR HEADSET

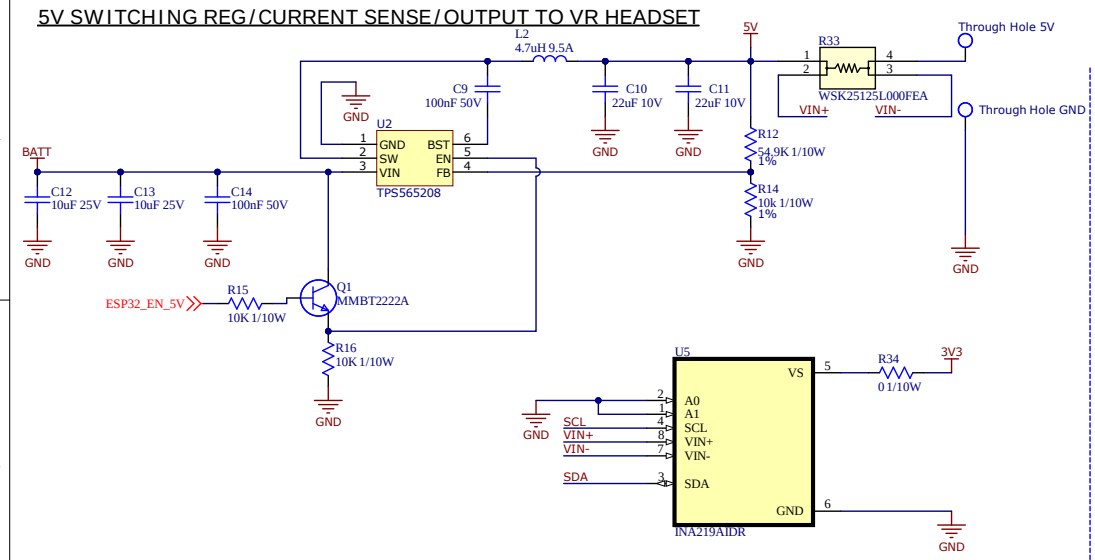

3V3 SWITCHING REG

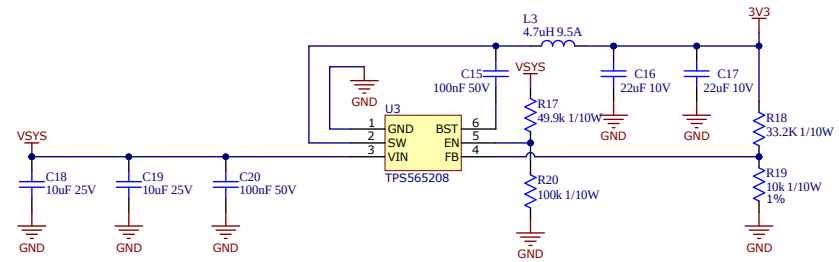

USB C/INPUT FILTER/CHARGING SYSTEM

Input Voltage:
Input Current:

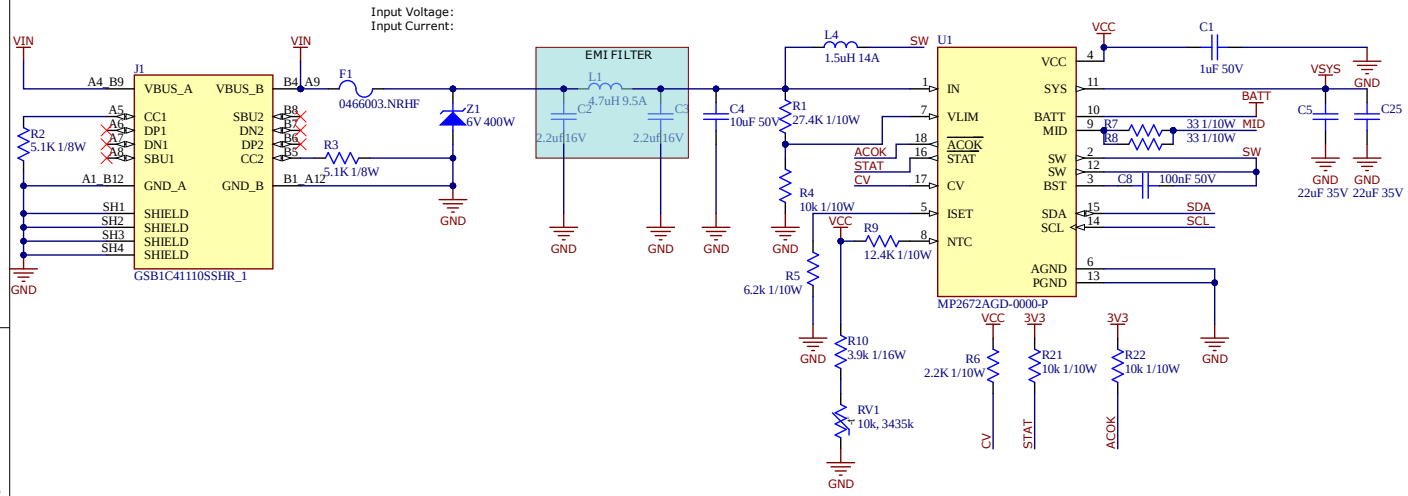

BATTERY HOLDER

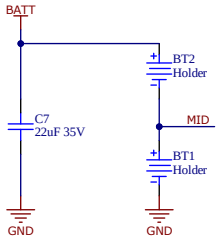

mars INTERNATIONAL
60 Kingsbridge Rd.
Piscataway, NJ 08854
phone: (908)233-0044
fax: (908)233-2227

Title: Smart Battery Pack			
Size: B	Number: 101-001	Revision: 1	Drawn By: ALI RAHIMI
Date: 8/21/25		Sheet 1 of 2	Checked By: RENJI
File: Battery Pack_P1_REV_1.SchDoc			

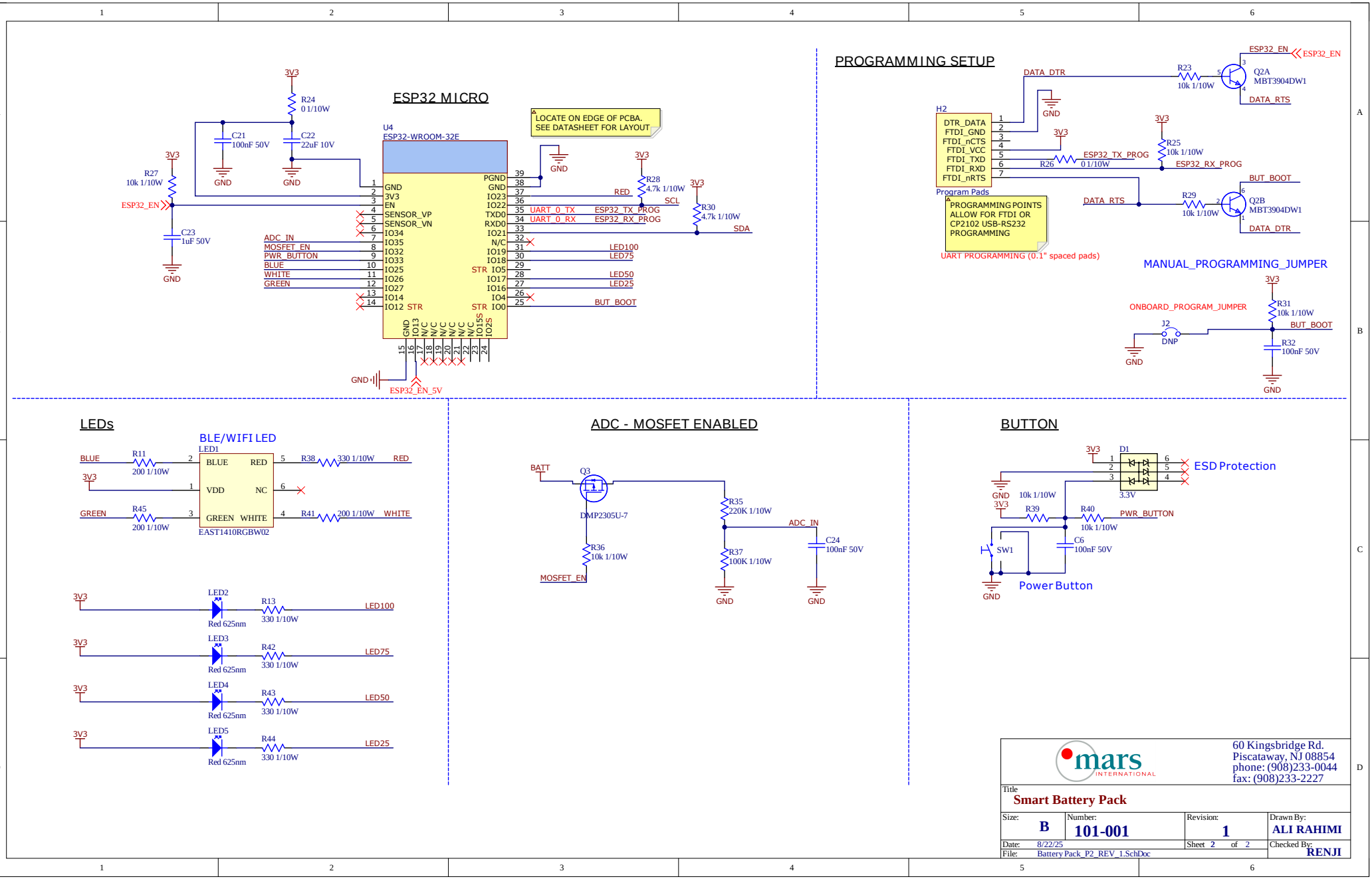
ESP32 MICRO
U4
ESP32-WROOM-32E
LOCATE ON EDGE OF PCBA.
SEE DATASHEET FOR LAYOUT
R24
0 1/10W
C21
100nF 50V
C22
22uF 10V
R27
10k 1/10W
C23
1uF 50V
R28
4.7k 1/10W
R30
4.7k 1/10W
ESP32_EN
ESP32_EN_5V
ADC_IN
MOSFET_EN
PWR_BUTTON
BLUE
WHITE
GREEN
RED
SCL
SDA
UART_0_TX
UART_0_RX
ESP32_TX_PROG
ESP32_RX_PROG
LED100
LED75
LED50
LED25
BUT_BOOT
PROGRAMMING SETUP
H2
DTR_DATA
FTDI_GND
FTDI_nCTS
FTDI_VCC
FTDI_TXD
FTDI_RXD
FTDI_nRTS
Program Pads
PROGRAMMING POINTS
ALLOW FOR FTDI OR
CP2102 USB-RS232
PROGRAMMING
UART PROGRAMMING (0.1" spaced pads)
DATA_DTR
DATA_RTS
R23
10k 1/10W
R26
0 1/10W
R25
10k 1/10W
R29
10k 1/10W
Q2A
MBT3904DW1
Q2B
MBT3904DW1
MANUAL_PROGRAMMING_JUMPER
ONBOARD_PROGRAM_JUMPER
J2
DNP
R31
10k 1/10W
R32
100nF 50V
LEDs
BLE/WIFI LED
LED1
EAST1410RGBW02
R11
200 1/10W
R45
200 1/10W
R38
330 1/10W
R41
200 1/10W
LED2
LED3
LED4
LED5
Red 625nm
R13
R42
R43
R44
330 1/10W
ADC - MOSFET ENABLED
Q3
DMP2305U-7
R36
10k 1/10W
R35
220K 1/10W
R37
100K 1/10W
C24
100nF 50V
BUTTON
D1
ESD Protection
3.3V
R39
10k 1/10W
R40
10k 1/10W
C6
100nF 50V
SW1
Power Button
mars INTERNATIONAL
60 Kingsbridge Rd.
Piscataway, NJ 08854
phone: (908)233-0044
fax: (908)233-2227
Title
Smart Battery Pack
Size: B
Number: 101-001
Revision: 1
Drawn By: ALI RAHIMI
Date: 8/22/25
Sheet 2 of 2
Checked By: RENJI
File: Battery Pack_P2_REV_1.SchDoc