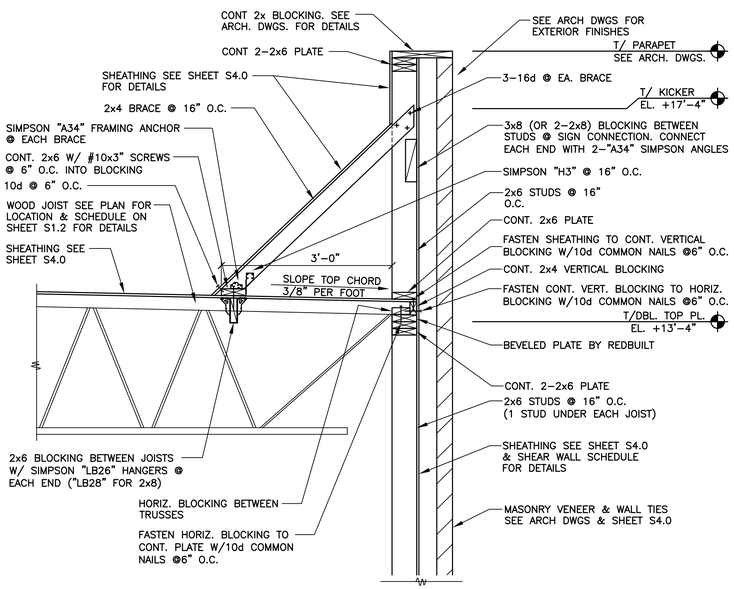

1 S3.0 SECTION
3/4" = 1'-0"

SEE SECTION 1/S3.0 FOR ADDITIONAL INFORMATION

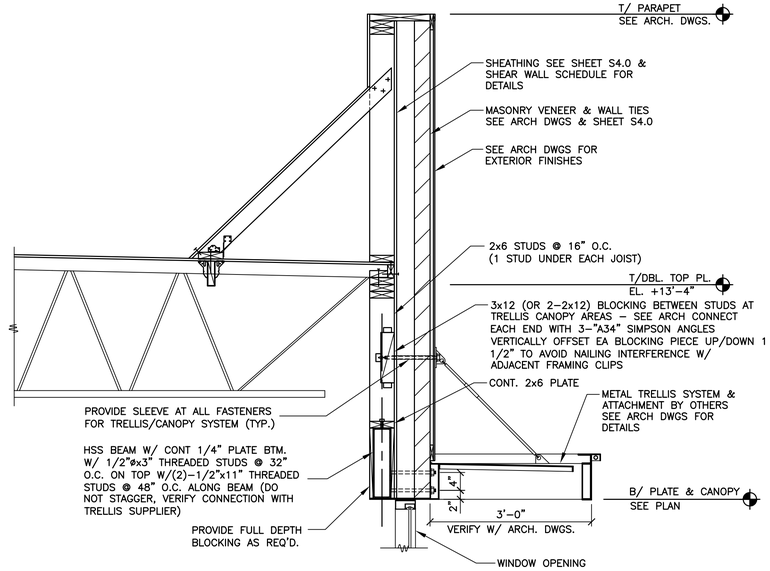

2 S3.0 SECTION
3/4" = 1'-0"

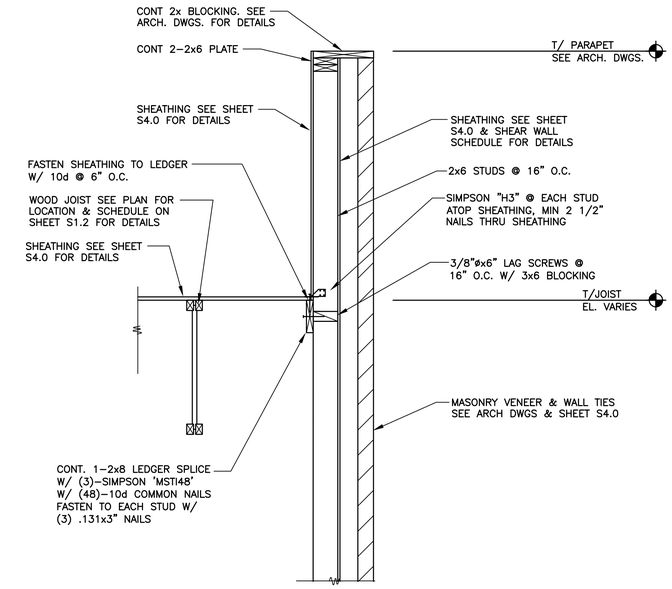

3 S3.0 SECTION
3/4" = 1'-0"

SEE SECTION 2/S3.0 & 3/S3.0 FOR ADDITIONAL INFORMATION

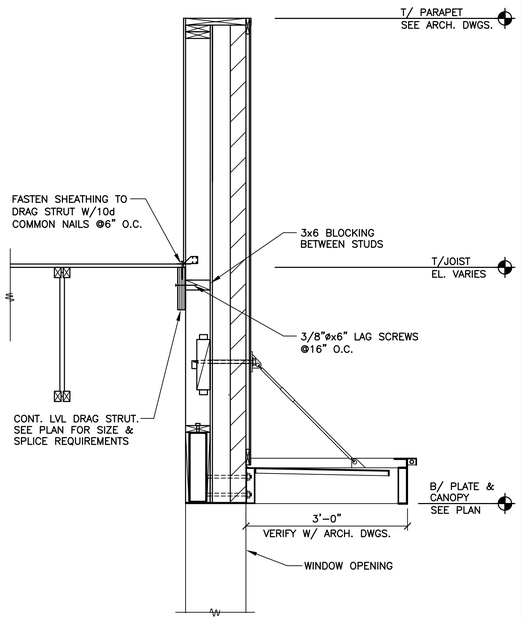

4 S3.0 SECTION
3/4" = 1'-0"

SEE SECTION 1/S3.0 FOR ADDITIONAL INFORMATION

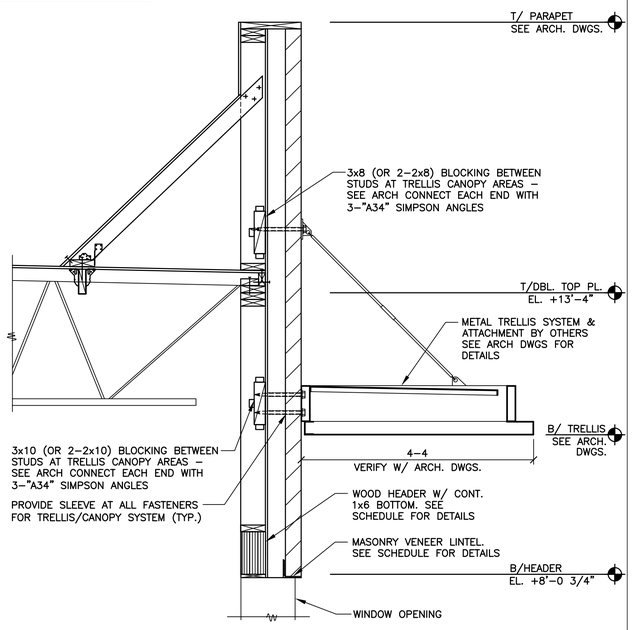

5 S3.0 SECTION
3/4" = 1'-0"

SEE SECTION 4/S3.0 FOR ADDITIONAL INFORMATION

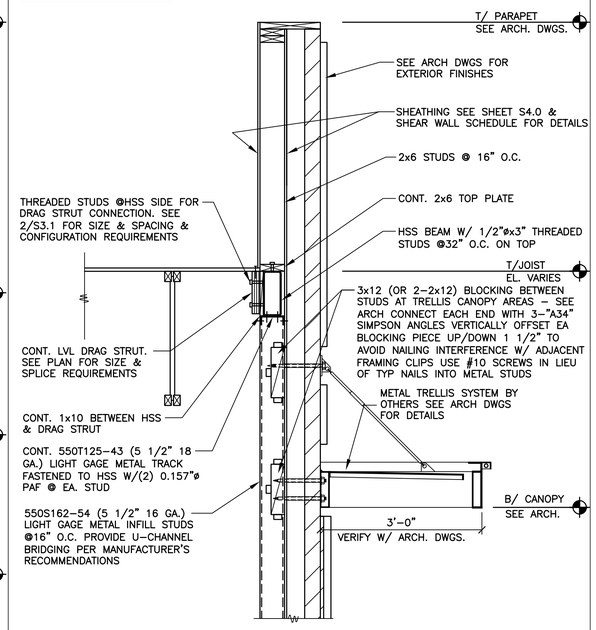

6 S3.0 SECTION
3/4" = 1'-0"

SEE SECTION 1/S3.0 FOR ADDITIONAL INFORMATION

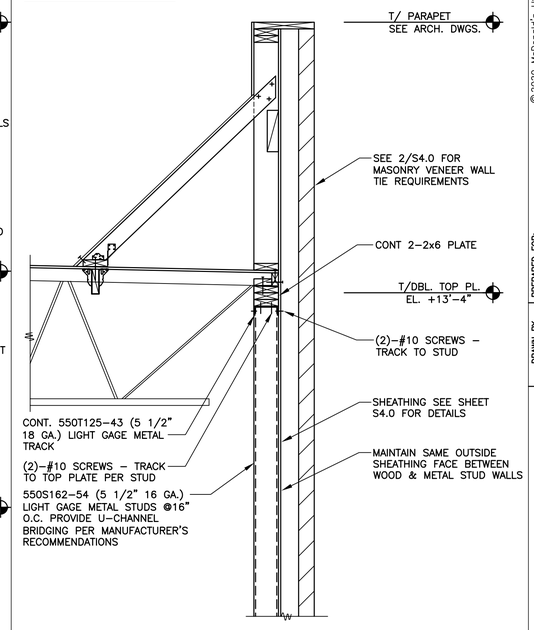

7 S3.0 SECTION
3/4" = 1'-0"

REV	DATE	DESCRIPTION	BY
.	.	.	.
.	.	.	.
.	.	.	.
.	.	.	.
.	.	.	.
.	1/23/20	PERMIT	.
.	1/13/20	USRD REVIEW SET	.

PREPARED BY:
VOIGT & ASSOCIATES, INC.
STRUCTURAL ENGINEERING SERVICES
4635 NICOLS RD.
EDEN PRAIRIE, MINNESOTA 55122
PHONE (651) 686-7227
FAX (651) 686-0444

1/23/20

PREPARED FOR:
McDonald's USA, LLC

© 2020 McDonald's USA, LLC
These drawings and specifications are the confidential and proprietary property of McDonald's USA, LLC and shall not be copied or reproduced without written authorization. The contract documents were prepared in conjunction with the project specified herein. They are not suitable for use on a different site or at a later time. Use of these drawings for reference or example on another project requires the express written consent of McDonald's Properties of Kansas. Reproduction of the contract documents for reuse on another project is not authorized.

DRAWN BY CRB
STD ISSUE DATE 2019_11
REVIEWED BY AWM
DATE ISSUED 1/23/20
VA# M20-001

TITLE 2019 STANDARD BUILDING - BB20 459/F10-WOOD/WOOD
DESCRIPTION
WOOD BEARING WALLS W/FIBER CEMENT SIDING & CI
WOOD ROOF TRUSS FRAMING
FIBER CEMENT PANEL/BATTEN/ALPOLIC PANEL/BRICK EXT. FINISH
SITE ID 015-0071
SITE ADDRESS 605 SOUTH 7TH STREET, KANSAS CITY, KS

SHEET NO. 015-0071.00.0
S3.0
FRAMING SECTIONS