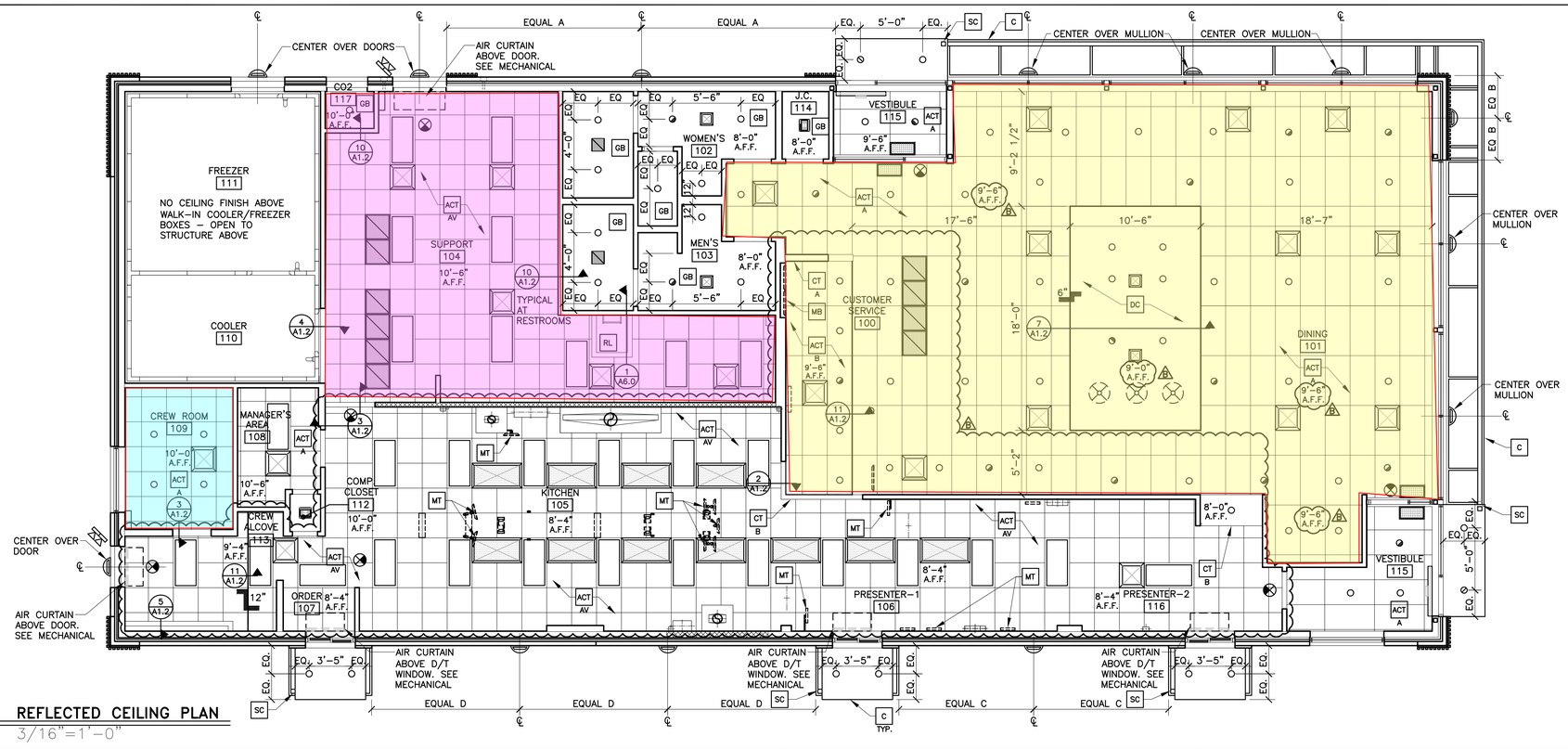

1 A1.2 **REFLECTED CEILING PLAN**
3/16"=1'-0"

KEY NOTES

- ACT A — ACOUSTICAL CEILING TILE – 24"X48". VERIFY FINISHES WITH DECOR COMPANY
- ACT AV — ACOUSTICAL CEILING TILE: VINYL FACED USG 24"X24" CLEAN ROOM CLIMA-PLUS. UNPERFORATED. SMOOTH TEXTURE
  COLOR: WHITE
  GRID: USG 15/16" DX/DXL COLOR: WHITE
- ACT B — ACOUSTICAL CEILING TILE: USG 24"X48" PREMIER HI-LITE CLIMAPLUS KAPOK PANELS.
  COLOR: FLAT BLACK 205
  GRID: USG 15/16" DX/DXL COLOR: BLACK
- C — ALUMINUM CANOPY WITH INTEGRAL GUTTER AND SCUPPER – SEE 4/A5.0 FOR NOTES – SEE ROOF PLAN FOR DIMENSIONS – SEE ELEVATION FOR COLOR AND FASCIA LOCATIONS
- CT A — WALL TILE: CERAMIC TILE
  SIZE: 4"x12", PATTERN: STACK BOND
  GROUT: MAPEI ULTRACOLOR PLUS – JOINT TO BE 1/16" MAX.
  SEE DECOR DRAWINGS FOR TILE AND GROUT COLOR SPEC.
- CT B — WALL TILE: CERAMIC TILE
  SIZE: 4"x12", PATTERN: STACK BOND
  GROUT: MAPEI ULTRACOLOR PLUS – JOINT TO BE 1/16" MAX.
  SEE DECOR DRAWINGS FOR TILE AND GROUT COLOR SPEC.
- DC — SUSPENDED DECORATIVE CEILING TREATMENT – SEE DECOR DRAWINGS FOR ADDITIONAL INFORMATION
- DS — DROPPED SOFFIT
- DC-WH — BOTTOM TO ALIGN WITH GYP BD AT EXTERIOR WINDOW HEAD
  MAY BE REPLACED BY ELEMENT BY DECOR SUPPLIER – CONFIRM WITH AREA CONSTRUCTION MANAGER
- GB — GYPSUM BOARD CEILING
- MB — MENU BOARD WITH BEZELS BY OTHERS UNDER SEPARATE PERMIT – SEE ELEC PLANS
- MT — CEILING MOUNTED MONITOR: A) VERIFY MONITOR LOCATIONS WITH McDONALD'S PROJECT MANAGER PRIOR TO INSTALLATION. B) SEE DETAIL 6/A1.2 FOR INSTALLATION METHOD
- RL — ROOF LADDER OPENING
- SC — INTERGRAL GUTTER SCUPPER

GENERAL NOTES

1. SEE SHT A6.1 FOR CEILING FINISHES.
2. SEE SHT A1.0 FOR MENU BOARD DROPPED SOFFIT LOCATION DIMENSIONS
3. GENERAL CONTRACTOR SHALL COORDINATE HVAC DIFFUSER LOCATION WITH DECOR & MECHANICAL PLANS AND REPORT ANY DISCREPANCIES TO ARCHITECT.
4. REFERENCE MECHANICAL AND ELECTRICAL DRAWINGS FOR DIFFUSER AND LIGHTING INFORMATION.
5. PROVIDE USG V15 CEILING TILE RETENTION CLIPS IN ALL VESTIBULE AREAS

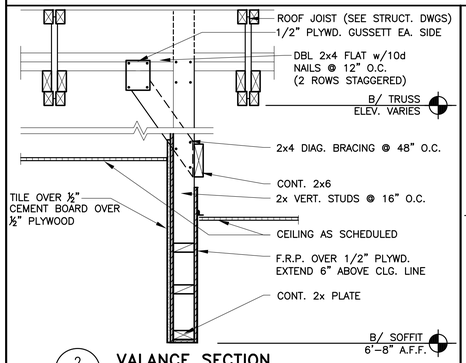

2 A1.2 **VALANCE SECTION**
1"=1'-0"

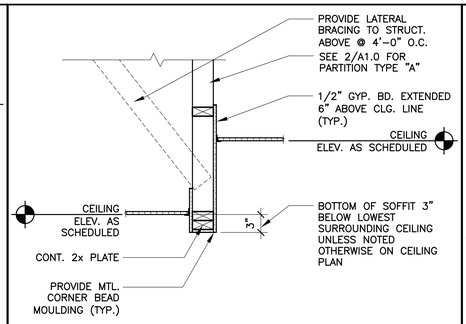

3 A1.2 **CEILING TRANSITION w/ SOFFIT**
1"=1'-0"

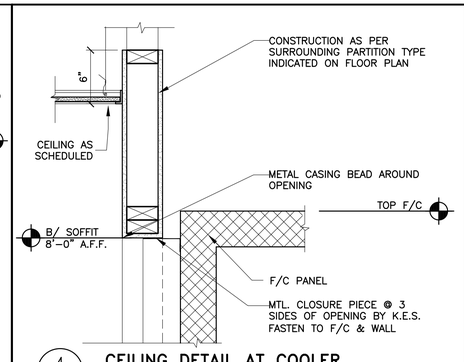

4 A1.2 **CEILING DETAIL AT COOLER**
1 1/2"=1'-0"

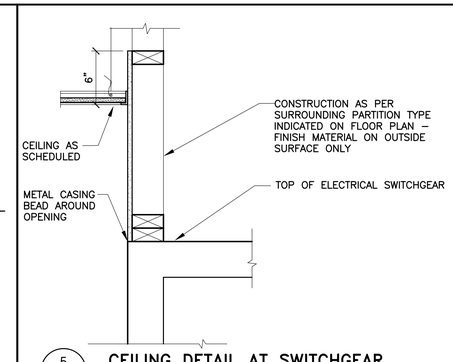

5 A1.2 **CEILING DETAIL AT SWITCHGEAR**
1 1/2"=1'-0"

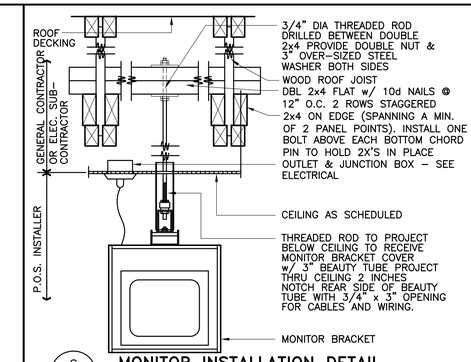

6 A1.2 **MONITOR INSTALLATION DETAIL**
N.T.S.

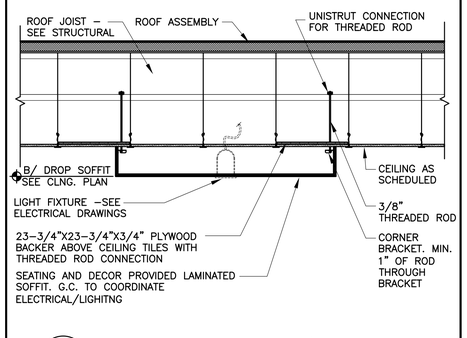

7 A1.2 **CEILING TRANSITION w/ SOFFIT**
1/2"=1'-0" COORDINATE w/ DECOR

8 A1.2 **DETAIL NOT USED**
–

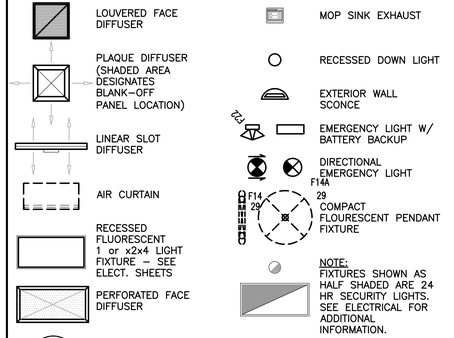

9 A1.2 **SYMBOL LEGEND**
NOT TO SCALE

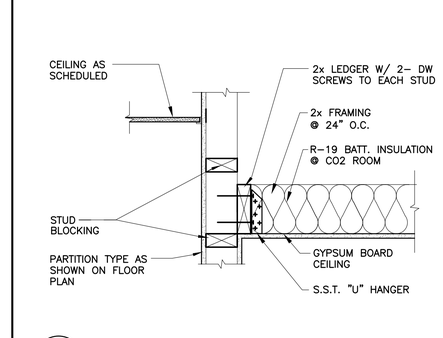

10 A1.2 **GYP BD CEILING DETAIL**
1 1/2"=1'-0" A0610WB1

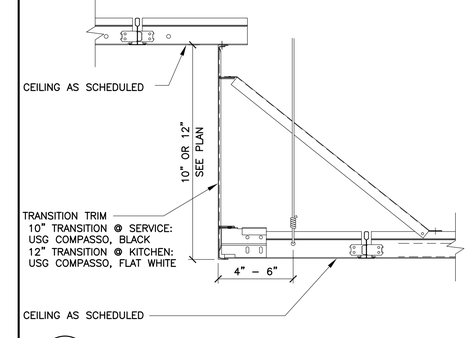

11 A1.2 **ACOUSTIC CEILING TRANSITION**
N.T.S. COORDINATE w/ DECOR

REV	DATE	DESCRIPTION	BY
.	.	.	.
.	.	.	.
B	12/03/20	SERVICE AREA OPTIMIZATION	DJA
.	11/13/20	USRD SAD SET REVIEW	DJA
A	05/05/20	CIVIL & PLAN REVIEW COMMENTS	DJA
.	01/23/20	PERMIT SET	DJA
.	01/13/20	USRD PROGRESS SET REVIEW	DJA

I hereby certify that this plan, specification or report was prepared by me or under my direct supervision and that I am a duly registered ARCHITECT under the laws of the State of Kansas.

Signature
12/03/20
Date
Registration Number

PREPARED BY:
reprise DESIGN
Architecture, Inc.
ARCHITECTURE & PLANNING
12400 PORTLAND AVENUE SOUTH, SUITE 100
BURNSVILLE, MN 55337
EMAIL: DATA@REPRISEDESIGN.COM
PHONE: (952) 252-4042
FAX: (952) 252-4043

PREPARED FOR:
McDonald's USA, LLC

©2020 McDonald's USA, LLC
These drawings and specifications are the confidential and proprietary property of McDonald's USA, LLC and shall not be copied or reproduced without written authorization. The contract documents were prepared for use on this specific site in connection with a McDonald's restaurant project. Any reuse on a different site or at a later time. Use of these drawings for reference, or example, on another project requires the services of a McDonald's licensed architect and shall be limited to the contract documents for reuse on another project is not authorized.

DRAWN BY DJA
STD ISSUE DATE 2019_11
REVIEWED BY KD
DATE ISSUED 01/23/20
RQ#19175

TITLE
2019 STANDARD BUILDING – BB20
4597F10-WOOD/WOOD

DESCRIPTION	FINISH
WOOD BEARING WALLS W/FIBER CEMENT SIDING & CI	
WOOD ROOF TRUSS FRAMING	
FIBER CEMENT PANEL/BATTEN/ALPOLIC PANEL/BRICK EXT.	

SITE ID 015-0071
SITE ADDRESS 605 SOUTH 7TH STREET, KANSAS CITY, KS

SHEET NO.
015-0071.00.B
A1.2
REFLECTED CLG. PLAN