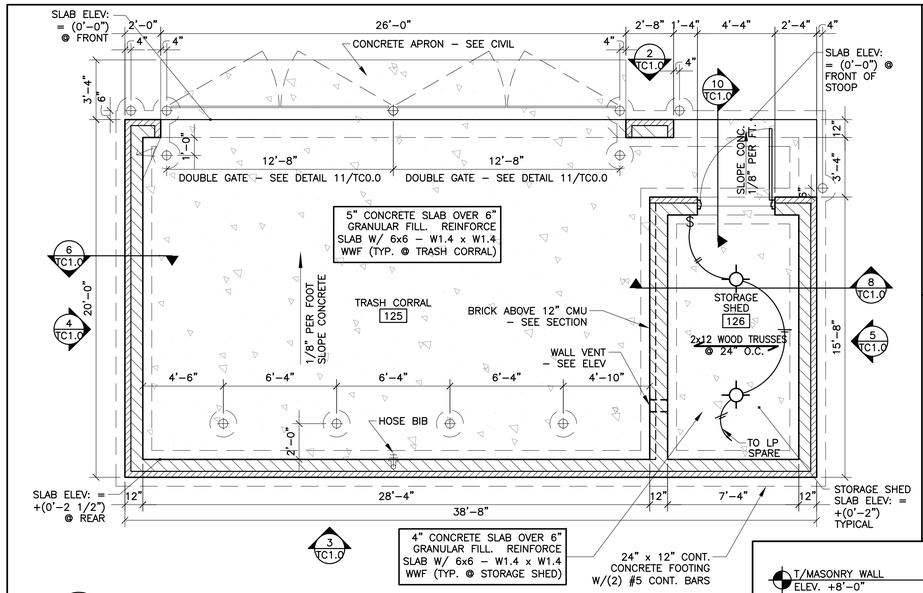

1 TC1.0 **TRASH CORRAL PLAN W/ SHED**
1/4"=1'-0"

NOTE:
1. HOLLOW METAL DOOR SHALL BE 4'-0"X7'-0"X 1 3/4" WITH FRAME, THRESHOLD, CONTINUOUS HINGE, LEVER HANDLE AND STOREROOM LOCKSET
2. INCANDESCENT LIGHT FIXTURE SHALL BE FURNISHED. WIRE GUARD, 40 WATT LAMP,AND SURFACE MOUNT. PASS & SEMORE–#44 OR LIGHTING LTD–#1742–2000 AWG

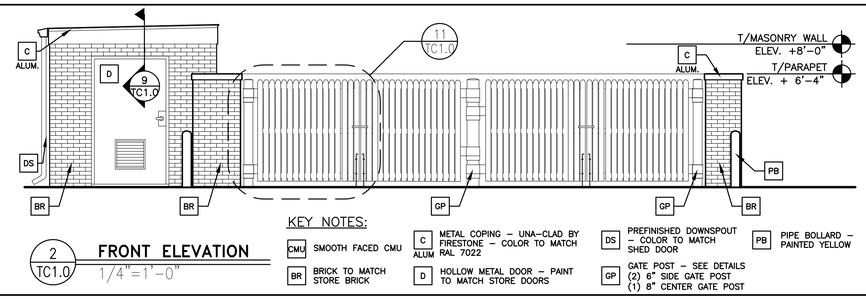

2 TC1.0 **FRONT ELEVATION**
1/4"=1'-0"

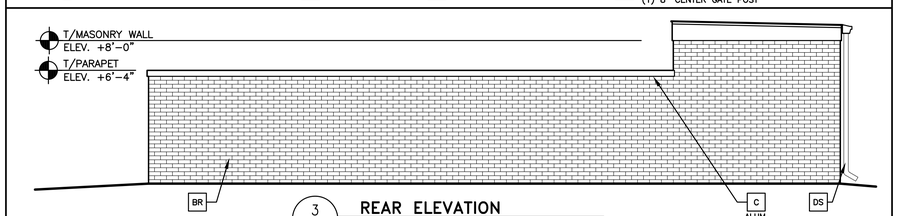

3 TC1.0 **REAR ELEVATION**
1/4"=1'-0"

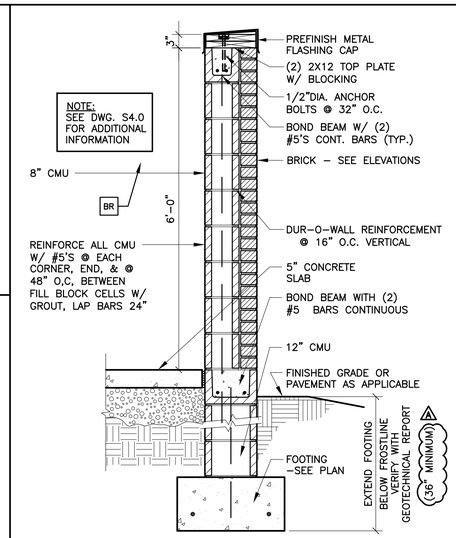

6 TC1.0 **TYPICAL WALL SECTION**
3/4"= 1'-0"

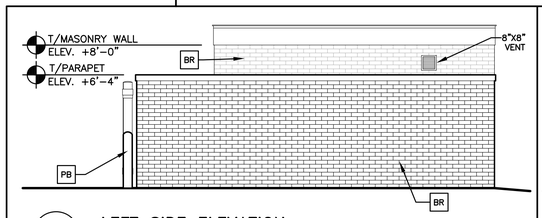

4 TC1.0 **LEFT SIDE ELEVATION**
1/4"=1'-0"

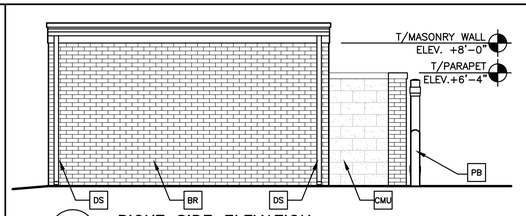

5 TC1.0 **RIGHT SIDE ELEVATION**
1/4"=1'-0"

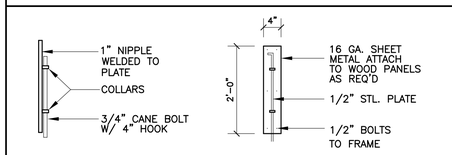

7 TC1.0 **BOLT DETAILS**
NOT TO SCALE

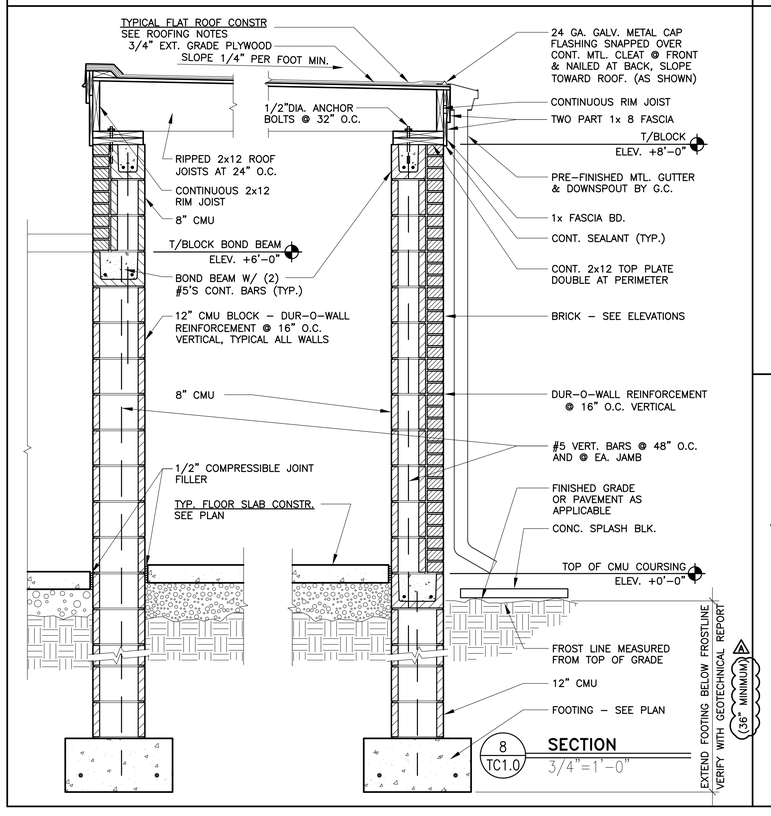

8 TC1.0 **SECTION**
3/4"=1'-0"

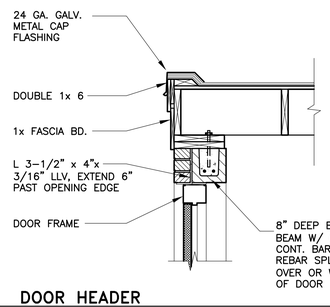

9 TC1.0 **DOOR HEADER**
3/4"=1'-0"

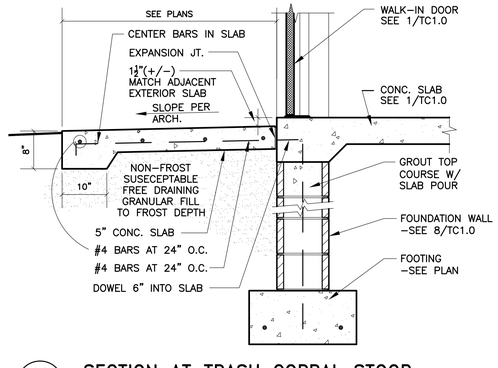

10 TC1.0 **SECTION AT TRASH CORRAL STOOP**
N.T.S.

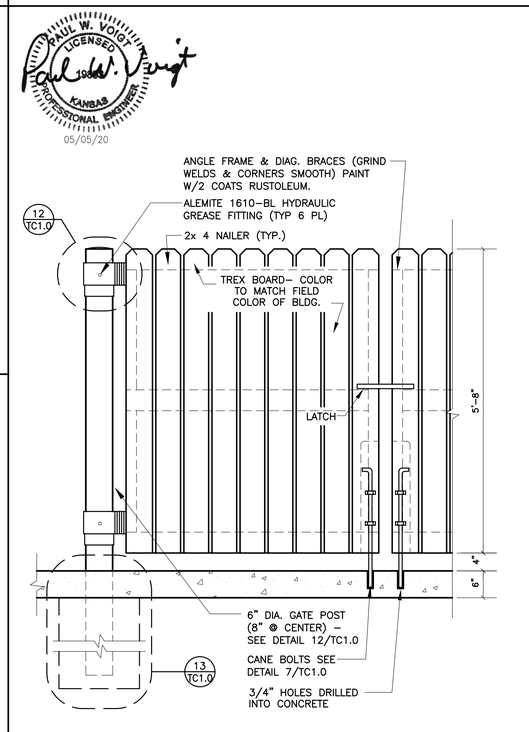

11 TC1.0 **TYP. GATE DETAIL**
1/2"=1'-0"

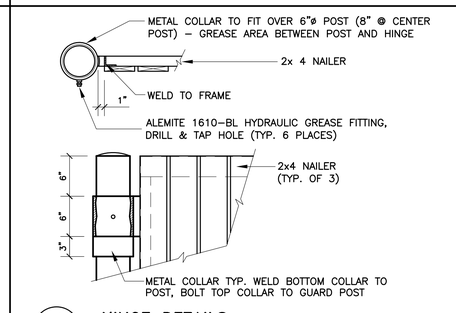

12 TC1.0 **HINGE DETAILS**
NOT TO SCALE

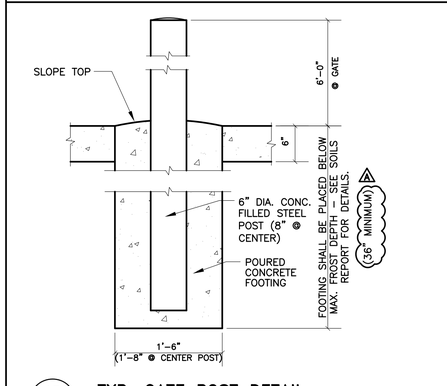

13 TC1.0 **TYP. GATE POST DETAIL**
1"=1'-0"

REV	DATE	DESCRIPTION	BY
A	05/05/20	CIVIL & PLAN REVIEW COMMENTS	DIA
-	01/23/20	PERMIT SET	DIA
-	01/13/20	USRO PROGRESS SET REVIEW	DIA

I hereby certify that this plan, specification or report was prepared by me or under my direct supervision and that I am a duly registered ARCHITECT under the laws of the State of Kansas.

Signature
05/05/20
Date
Registration Number

PREPARED BY:
reprise DESIGN
Architecture, INC.
ARCHITECTURE & PLANNING
12400 PORTLAND AVENUE SOUTH, SUITE 100
BURNSVILLE, MN 55337
EMAIL: DATA@REPRISEDESIGN.COM
PHONE: (952) 252-4042
FAX: (952) 252-4043

PREPARED FOR:
McDonald's USA, LLC

©2020 McDonald's USA, LLC
These drawings and specifications are the confidential and proprietary property of McDonald's USA, LLC and shall not be copied or reproduced without written authorization. The contract documents were prepared for use on this specific site in accordance with McDonald's USA, LLC standards. Any reuse on a different site or at a later time. Use of these drawings for reference or example on another project requires the services of a licensed architect or engineer to review and modify the contract documents for reuse on another project is not authorized.

DRAWN BY	STD ISSUE DATE
DIA	2019_11
REVIEWED BY: KD	DATE ISSUED 01/23/20

TITLE: 2019 STANDARD BUILDING – BB20 4597F10–WOOD/WOOD

DESCRIPTION	SITE ADDRESS	RQ#19175
WOOD BEARING WALLS W/FIBER CEMENT SIDING & CI		
WOOD ROOF TRUSS FRAMING		
FIBER CEMENT PANEL/BATTEN/LAP/DOLIC PANEL/BRICK, EXT. FINISH		
SITE ID 015–0071	605 SOUTH 7TH STREET, KANSAS CITY, KS	

SHEET NO. 015–0071.00.A
TC1.0
TRASH CORRAL