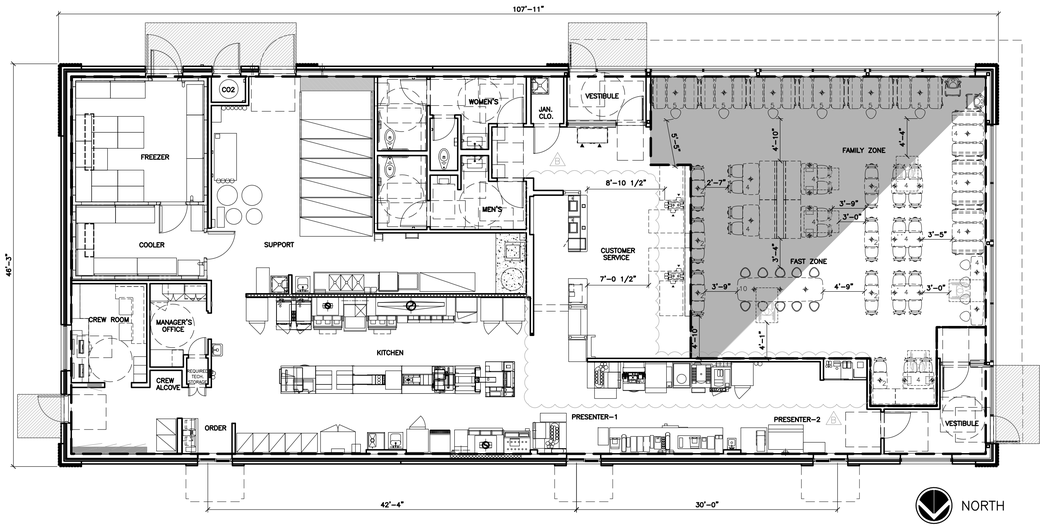

4597F10-WW PLAN

102 SEATS (6 ACCESSIBLE SEATS)

THIS DRAWING IS FOR SEATING REFERENCE ONLY
(SEATING LAYOUT NOT FOR CONSTRUCTION)

SEATING LAYOUT IS SCHEMATIC, THE FINAL SEATING LAYOUT TO BE PROVIDED BY DECOR, UNDER SEPARATE COVER BY OTHERS

2019 4597F10-WW BUILDING BB20
DENVER FIELD OFFICE

BUILDING INFORMATION:

ADDRESS:

STATE SITE CODE:	015-0071
STREET ADDRESS:	605 SOUTH 7TH STREET
CITY:	KANSAS CITY
COUNTY:	WYANDOTTE
STATE:	KANSAS

STRUCTURE:

WOOD LOAD BEARING WALLS, WOOD ROOF FRAMING

UTILITIES:

ELECTRIC GRILLS & ELECTRIC FRYERS
ELECTRIC HVAC & ELECTRIC WATER HEATER

BUILDING CODE:

BUILDING CODE EDITION:	2012 INTERNATIONAL BUILDING CODE
MECHANICAL CODE EDITION:	2012 INTERNATIONAL MECHANICAL CODE
ELECTRICAL CODE EDITION:	2011 NATIONAL ELECTRICAL CODE
PLUMBING CODE EDITION:	2012 UNIFORM PLUMBING CODE
ENERGY CODE EDITION:	2009 INTERNATIONAL ENERGY CONSERVATION CODE
FIRE CODE EDITION:	2012 INTERNATIONAL FIRE CODE
LIFE SAFETY CODE EDITION:	2012 NFPA 101 LIFE SAFETY CODE
FUEL/GAS CODE EDITION:	2012 INTERNATIONAL FUEL GAS CODE
HEALTH CODE EDITION:	2012 KANSAS FOOD CODE
ACCESSIBILITY CODE EDITION:	2010 ADAAG & 2012 IBC

BUILDING DATA:

OCCUPANCY:	USE GROUP A2
CONSTRUCTION TYPE:	VB
NUMBER OF STORIES:	1
BUILDING HEIGHT:	18'-9 1/2" (MAIN BLDG. PARAPET)
BASE BUILDING GROSS AREA:	4,902 S.F.
BASE BUILDING NET AREA:	4,550 S.F.

LIFE SAFETY SYSTEM:

EMERGENCY LIGHTING:	X YES	NO
EXIT SIGNS:	X YES	NO
FIRE ALARM:	YES	X NO
DUCT SMOKE DETECTORS W/ AUDIBULE/VISIBLE DEVICE:	X YES	NO
FIRE SPRINKLERS:	X YES	NO
SPRINKLER FLOW/TAMPER SWITCH W/ AUDIBLE/VISIBLE DEVICE:	X YES	NO
CO2 DETECTION SYSTEM W/ AUDIBLE/VISIBLE DEVICE:	X YES	NO
PANIC HARDWARE:	X YES	NO

DESIGN LOADS:

SEE GENERAL STRUCTURAL NOTES ON SHEET S4.0

OCCUPANCY ALLOWANCE:

INTERNATIONAL BUILDING CODE 2012

TABLE 1004.1.2
MAXIMUM FLOOR AREA ALLOWANCES PER OCCUPANT

FUNCTION OF SPACE	ALLOWANCE	AREA	OCCUPANTS
ACCESSORY STORAGE AREAS, MECHANICAL EQUIPMENT ROOM	300 GROSS	575 SF	2
ASSEMBLY WITH FIXED SEATS	SEE PLAN	–	102
ASSEMBLY W/OUT FIXED SEATS, STANDING SPACE	5 NET	173 SF	35
BUSINESS AREAS	100 GROSS	60 SF	1
KITCHENS, COMMERCIAL (BASED ON FULL KITCHEN STAFF)	200 GROSS	–	17
TOTAL OCCUPANCY ALLOWANCE			157

SYMBOL LEGEND:

- 6 / A4.0 — SECTION TAG
- 6 / A4.0 — DETAIL TAG
- 5 / A6.0 — DETAIL TAG
- T/ SLAB ELEV. 0'-0" — ELEVATION TAG
- 6 / A4.0 DETAIL 1 1/2"=1'-0" DETAIL NUMBER — DRAWING TITLE
- 4 — DOOR TAG
- DINING ROOM 103 — ROOM NAME & NUMBER
- A — PARTITION TAG

DESIGNER OF RECORD

DISCIPLINE:	NAME:	ADDRESS:	LICENSE #
ARCHITECT:	Reprise Design Brian Johnson (952) 252-4042	12400 Portland Avenue Burnsville, MN 55337	5420
STRUCTURAL:	Voigt & Associates Paul W. Voigt (651) 686-7727	4635 Nicols Road Eagan, MN 55122	19893
MECHANICAL:	Emanuelson-Podas, Inc Michael A. Webert (952) 930-0050	7705 Bush Lake Road Edina, MN 55439	17648
PLUMBING:	Emanuelson-Podas, Inc Michael A. Webert (952) 930-0050	7705 Bush Lake Road Edina, MN 55439	17648
ELECTRICAL:	Emanuelson-Podas, Inc Matthew W. Fults (952) 930-0050	7705 Bush Lake Road Edina, MN 55439	17667

McDONALD'S CONSTRUCTION PROJECT MANAGER

MANAGER:	NAME:	ADDRESS:	PHONE #
	Carter Mann	4643 Ulster Street Suite 1300 Denver, CO 80237	(952) 300-5504

IF YOU HAVE ANY QUESTIONS REGARDING THESE PLANS, PLEASE CONTACT THE ARCHITECTURAL PROJECT MANAGER:

Kristi Donahue
PHONE: 952-562-3730
EMAIL: kdonahue@reprisedesign.com

C

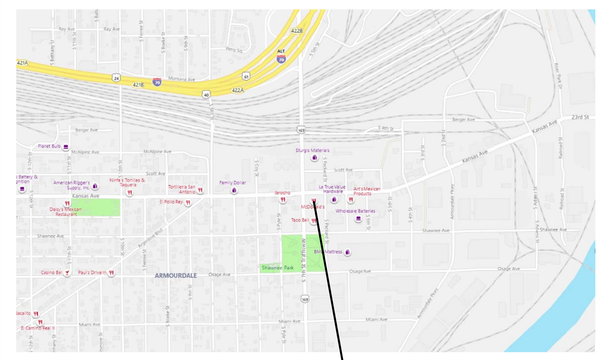

VICINITY MAP: NORTH

REVISIONS

DRAWING INDEX

T1.0 Cover Sheet
GN1.0 General Notes

DRIVE-THRU (FOR REFERENCE ONLY)
DT1.0 Drive-Thru Plan & Details

TRASH CORRAL
TC1.0 Trash Corral Plan & Details

CIVIL
SEE CIVIL FOR SPECIFIC SHEETS

ARCHITECTURAL
A1.0 Partial Floor Plan & Details
A1.1 Partial Floor Plan
A1.2 Reflected Ceiling Plan & Details
A1.3 Roof Plan & Details
A2.0 Exterior Elevations
A2.1 Exterior Elevations & Details
A3.0 Delivery POD Details
A3.1 Service POD Details
A4.0 Enlarged Restroom Plan & Details
A4.1 Enlarged Plan Details
A4.2 Enlarged Front Counter Plan & Details
A5.0 Wall Sections & Details
A5.1 Wall Sections & Details
A5.2 Wall Sections & Details
A5.3 Wall Sections & Details
A6.0 Door & Hardware Schedules
A6.1 Finish Schedules

STRUCTURAL
S1.0 Foundation Plan
S1.2 Roof Framing Plan
S2.0 Foundation Sections
S3.0 Framing Sections
S3.1 Steel Details
S3.2 Framing Details
S4.0 General Structural Notes

MECHANICAL
M1.0 Mechanical Roof Plan
M1.2 Ductwork Plan
M1.4 Refrigerant & Gas Piping Plan
M2.0 Exhaust Hoods
M3.0 Mechanical Details
M4.0 General Mechanical Notes
M4.1 Mechanical Schedules

FIRE PROTECTION
FIRE PROTECTION PLAN – Provided by Others

PLUMBING
P1.0 Domestic Water Piping Plan
P1.2 Waste, Vent & Storm Piping Plan
P1.4 Underground Rough-in Plan
P1.6 Overhead Rough-in Plan
P2.0 Domestic Water Isometric
P2.1 Waste & Vent Isometric
P2.2 Storm Isometric
P3.0 Plumbing Details
P4.0 General Plumbing Notes
P4.1 Plumbing Schedules
P4.2 Check Valve Detail

ELECTRICAL
E1.0 POS Electrical Riser Diagram
E1.1 Rough-In Floor Plan
E2.0 Partial Lighting Plan & Schedule
E2.1 Partial Lighting Plan
E2.2 Electrical Roof Plan
E3.0 Rough-In Electrical Schedule
E3.1 Electrical & Lighting Notes and Details
E3.2 Interlock Wiring Diagrams
E4.0 Wiring Details
E4.1 Lighting Controls
E4.2 Split Utility Distribution Schedules

KITCHEN EQUIPMENT
K1.0 Kitchen Cover Sheet
K2.0 Kitchen Equipment Plan
K2.1 Kitchen Equipment Schedule

REV	DATE	DESCRIPTION	BY
-	-		DIA
C	02/22/21	STRUCTURAL	DIA
B	12/03/20	SERVICE AREA OPTIMIZATION	DIA
-	11/13/20	USRD SAO SET REVIEW	DIA
A	05/05/20	CIVIL & PLAN REVIEW COMMENTS	DIA
-	01/23/20	PERMIT SET	DIA
-	01/13/20	USRD PROGRESS SET REVIEW	DIA

I hereby certify that this plan, specification or report was prepared by me or under my direct supervision and that I am a duly registered ARCHITECT under the laws of the State of Kansas.

Signature
02/22/21
Date
Registration Number

PREPARED BY:
reprise DESIGN
Architecture, INC.
ARCHITECTURE & PLANNING
12400 PORTLAND AVENUE SOUTH, SUITE 100
BURNSVILLE, MN 55337
EMAIL: DATA@REPRISEDESIGN.COM
PHONE: (952) 252-4042
FAX: (952) 252-4043

PREPARED FOR:
McDonald's USA, LLC

©2020 McDonald's USA, LLC
These drawings and specifications are the confidential and proprietary property of McDonald's USA, LLC and shall not be copied or reproduced without written authorization. The contract documents were prepared for use on this specific site in accordance with McDonald's USA, LLC standards. Use of these drawings for a different site or at a later time. Use of these drawings for reference or example on another project requires McDonald's USA, LLC's written authorization. Use of these drawings or contract documents for reuse on another project is not authorized.

DRAWN BY: DIA
STD. ISSUE DATE: 2019_11
REVIEWED BY: KD
DATE ISSUED: 01/23/20

TITLE: 2019 STANDARD BUILDING – BB20
4597F10-WOOD/WOOD

DESCRIPTION: WOOD BEARING WALLS W/FIBER CEMENT SIDING & CI
WOOD ROOF TRUSS FRAMING
FIBER CEMENT PANEL/BATTEN/ALPOLIC PANEL/BRICK EXT. FINISH

SITE ID: 015-0071
SITE ADDRESS: 605 SOUTH 7TH STREET, KANSAS CITY, KS

R@19175

SHEET NO. 015-0071.00.C
T1.0
COVER

GENERAL NOTES

1. ALL WORK SHALL BE IN COMPLIANCE WITH APPLICABLE FEDERAL, STATE AND LOCAL BUILDING CODES, REGULATIONS, ORDINANCES AND STANDARDS INCLUDING ADA AND OR OTHER HANDICAP ACCESSIBILITY CODES.
2. GEN.ERAL CONTRACTOR IS RESPONSIBLE FOR COORDINATING WITH THE OWNER'S VENDORS REGARDING SCHEDULING ON SITE DURING CONSTRUCTION AND SEQUENCING OF THE WORK.
3. THE CONSTRUCTION NOTES AND DRAWINGS ARE SUPPLIED TO ILLUSTRATE THE DESIGN INTENT AND GENERAL TYPE OF CONSTRUCTION DESIRED AND ARE INTENDED TO IMPLY THE FINEST QUALITY OF CONSTRUCTION, MATERIAL AND WORKMANSHIP THROUGHOUT.
4. THE DRAWINGS ARE NOT TO BE SCALED. FOR INFORMATION CONCERNING EXISTING CONDITIONS, ETC., VERIFICATION MUST BE DONE IN THE FIELD. LARGE SCALE DRAWINGS HAVE PRECEDENCE OVER SMALL SCALE DRAWINGS.
5. PRIOR TO COMMENCEMENT OF ANY CONSTRUCTION, CONTRACTOR SHALL VERIFY EXISTENCE AND LOCATION OF ALL EXISTING ABOVE AND BELOW GRADE, UTILITIES, INCLUDING SANITARY SEWER, STORM SEWER, WATER, GAS, ELECTRICAL, TELEPHONE, ETC. ANY DISCREPANCIES IN UTILITY LOCATIONS SHALL BE BROUGHT TO THE IMMEDIATE ATTENTION OF THE ARCHITECT.
6. GENERAL CONTRACTOR SHALL BE RESPONSIBLE FOR VERIFICATION OF ALL BUILDING DIMENSIONS PRIOR TO BEGINNING CONSTRUCTION AND SHALL IMMEDIATELY NOTIFY THE ARCHITECT OF ANY VARIANCE OR DISCREPANCY AFFECTING NEW CONSTRUCTION PRIOR TO PROCEEDING WITH WORK.
7. CONTRACTOR SHALL PROVIDE ALL NECESSARY BLOCKING IN WALLS FOR SUPPORT OF ALL EQUIPMENT, SHELVING, ACCESSORIES, SIGNAGE, AND OTHER DEVICES REQUIRED.
8. ALL PENETRATIONS SHALL RECEIVE CAULKING TO SEAL ANY TYPE OF ENERGY LOSS.
9. THE CONTRACTOR SHALL VERIFY AND COORDINATE ALL APPLICABLE DIMENSIONS OF FIXTURES AND EQUIPMENT SUPPLIED AND/OR INSTALLED BY OTHERS.
10. UPON COMPLETION OF PROJECT, G.C. TO OBTAIN ALL FINAL INSPECTIONS AS REQUIRED BY LOCAL JURISDICTIONS AND FURNISH OWNER WITH EVIDENCE OF ALL SUCH INSPECTIONS AND CERTIFICATES OF OCCUPANCY.
11. SIGNS, UNLESS NOTED OTHERWISE, ARE PROVIDED BY OWNER'S SIGN CONTRACTOR. OWNER'S SIGN VENDOR WILL PROVIDE MONUMENT SIGN BASE (CONCRETE, STONE, BRICK, ETC.) IF PROJECT REQUIRES DECORATIVE BASE. SEE SHEET L-1 TO VERIFY IF REQUIRED. GENERAL CONTRACTOR TO PROVIDE ROUGH-IN & FINAL CONNECTION AND BRAILLE EXIT SIGN.
12. GENERAL CONTRACTOR TO PROVIDE FOUR (4) 30 YARD DUMPSTERS DURING McDONALD RETAIL MOVE-IN.
13. GENERAL CONTRACTOR SHALL PROVIDE ONE SKILLED LABORER FOR ONE WEEK DURING McDONALD RETAIL MOVE-IN. (40 HOURS)
14. GENERAL CONTRACTOR SHALL BE RESPONSIBLE FOR SET-UP AND COORDINATION OF ALL THE UTILITY SERVICES FOR THE PROJECT.
15. ALL EXTERIOR FLOOR PLAN DIMENSIONS ARE TO EXTERIOR FACE OF MASONRY UNLESS OTHERWISE NOTED. ALL INTERIOR FLOOR PLAN DIMENSIONS ARE TO FACE OF FINISH UNLESS OTHERWISE NOTED.
16. FINAL KEYING TO BE COORDINATED WITH McDONALD FACILITY MANAGER AND PAID FOR BY McDONALD.
17. REFER TO "PROJECT MANUAL" FOR ALL OTHER INSTRUCTIONS & DIRECTIVES NOT SHOWN IN DRAWINGS.

ABBREVIATIONS

GENERAL ABBREVIATIONS

A	ANNEALED	INSUL	INSULATION
AC	AIR CONDITIONING	MAX	MAXIMUM
ACT	ACOUSTIC CEILING TILE	MECH	MECHANICAL
AFF	ABOVE FINISH FLOOR	MFR	MANUFACTURER
AHU	AIR HANDLING UNIT	MIN	MINIMUM
AL	ALUMINUM	MO	MASONRY OPENING
ASPH	ASPHALT	MR	MOISTURE RESISTANT
CJ	CONTROL JOINT	MTL	METAL
CLNG	CEILING	NA	NOT APPLICABLE
CMU	CONCRETE MASONRY UNIT	NIC	NOT IN CONTRACT
COL	COLUMN	NOM	NOMINAL
CONC	CONCRETE	NTS	NOT TO SCALE
CONT	CONTINUOUS	OC	ON CENTER
CP	CONCRETE PAD	OPP	OPPOSITE
CT	CERAMIC TILE	OPT	OPTIONAL
CL	CENTERLINE	PF	PRE-FABRICATED
DBL	DOUBLE	PSF	POUNDS PER SQUARE FOOT
DF	DRINKING FOUNTAIN	PT	PRESSURE TREATED
DIA	DIAMETER	PTD	PAINTED
DIM	DIMENSION	QT	QUARRY TILE
DN	DOWN	R	RADIUS
DS	DOWNSPOUT	REBAR	REINFORCING BAR
EA	EACH	REF	REFERENCE
EJ	EXPANSION JOINT	REQD.	REQUIRED
ELEC	ELECTRICAL	RO	ROUGH OPENING
ELEV	ELEVATION	SB	SPLASHBLOCK
EQ	EQUAL	SIM	SIMILAR
EXIST	EXISTING	SPEC	SPECIFICATION
FD	FLOOR DRAIN	SS	STAINLESS STEEL
FE	FIRE EXTINGUISHER	STL	STEEL
FEC	FIRE EXTINGUISHER CABINET	STOR	STORAGE
FF	FINISH FLOOR	SUSP	SUSPENDED
FR	FIRE RATED	T	TEMPERED
FRP	FIBERGLASS REINFORCED PLASTIC	TYP	TYPICAL
GALV	GALVANIZED	UNO	UNLESS NOTED OTHERWISE
GYP BD	GYPSUM BOARD	VCT	VINYL COMPOSITION TILE
HC	HANDICAP	VERT	VERTICAL
HDW	HARDWARE	WD	WOOD
HM	HOLLOW METAL	WP	WATERPROOF
HT	HEIGHT	WWF	WELDED WIRE FABRIC
HVAC	HEATING, VENTILATION, AIR CONDITIONING		

McDONALD'S ABBREVIATIONS

AP	APOLIC MENTAL PANEL	LAM	LAMINATE
BM	BRAKE METAL	LE	ACCENT LIGHTING
C	ALUMINUM CANOPY	LP	LOW POINT
CG	CORNER GUARD	LL	LEVEL LANDING
CT	WALL TILE	MACHINE	
DE	DECOR ELEMENT	MANAGER	
DEVICE		MF	METAL FASCIA
DMB	DIGITAL MENU BOARD	MS	MOP SINK
DS	DROP SOFFIT	PB	PIPE BILLARD
D/T	DRIVE-THRU	PT	RMHC COIN COLLECTOR
FB	FILL BOX	RL	ROOF LADDER
F/C	FREEZER/COOLER	ROOM	
GC	GENERAL CONTRACTOR	S	McDONALD'S SIGNAGE
HP	HIGH POINT	SCH	SHLUTER
KIOSK		SSBB	SELF SERVE BEVERAGE BAR
L	LIGHT FIXTURE	UN	ALUMINUM CANOPY UNDERSCORE

REV	DATE	DESCRIPTION	BY
-	-	-	-
-	-	-	-
-	-	-	-
-	-	-	-
-	-	-	-
-	01/23/20	PERMIT SET	DIA
-	01/13/20	USRD PROGRESS SET REVIEW	DIA

I hereby certify that this plan, specification or report was prepared by me or under my direct supervision and that I am a duly registered ARCHITECT under the laws of the State of Kansas.

Signature

01/23/20

Date

Registration Number

PREPARED BY:

reprise DESIGN

Architecture, INC.

ARCHITECTURE & PLANNING
12400 PORTLAND AVENUE SOUTH, SUITE 100
BURNSVILLE, MN 55337
EMAIL: DATA@REPRISEDESIGN.COM
PHONE: (952) 252-4042
FAX: (952) 252-4043

PREPARED FOR:

McDonald's USA, LLC

©2020 McDonald's USA, LLC

These drawings and specifications are the confidential and proprietary property of McDonald's USA, LLC and shall not be copied or reproduced without written authorization. The contract documents were prepared for use on this specific site in connection with this issue and are not suitable for reuse on a different site or at a later time. Use of these drawings for reference, or example, on another project requires the services of a qualified design professional to review and approve, otherwise the contract documents for reuse on another project is not authorized.

DRAWN BY DIA

STD ISSUE DATE 2019_11

REVIEWED BY KD

DATE ISSUED 01/23/20

RO#19175

TITLE

2019 STANDARD BUILDING – BB20
4597F10-WOOD/WOOD

DESCRIPTION	
WOOD BEARING WALLS W/FIBER CEMENT SIDING & CI	
WOOD ROOF TRUSS FRAMING	
FIBER CEMENT PANEL/BATTEN/ALPOLIC PANEL/BRICK EXT. FINISH	
SITE ID	SITE ADDRESS
015-0071	605 SOUTH 7TH STREET, KANSAS CITY, KS

SHEET NO.

015-0071.00.0

GN1.0

GENERAL NOTES

THE LAYOUT OF THE DRIVE–THRU LANES SHOWN IN THIS DETAIL ILLUSTRATES DRIVE–THRU DESIGN PRINCIPLES.

SIDE BY SIDE DRIVE–THRU STANDARD 1.0

1. SIDE BY SIDE DRIVE–THRU STANDARD 1.0 CURBING DETAILS:

1A DRIVE–THRU LANES BOUND BY CURB ON BOTH SIDES ARE TO BE 12'–0". LANES BOUND BY CURB ON ONE SIDE AND PAINTED STRIPING ON THE OTHER SIDE ARE TO BE A MIN. OF 10'–0".

1B THE MIN. RADIUS FOR ALL INSIDE/DRIVER'S SIDE DRIVE–THRU CURBING IS 20'–0".

1C PRIMARY LANE CURBING SHOULD BE AS STRAIGHT AS POSSIBLE. (LESS CURVING, THE BETTER).

1D THE OVERALL LENGTH OF THE CURBED ISLAND SHOULD BE 35'–45'. THE LENGTH OF THE ISLAND FROM THE DT CANOPY/SPEAKER ALLOWS FOR THREE CARS IN THE SECONDARY LANE, TWO IN THE PRIMARY LANE AND ONE AT THE COMMITMENT POINT.

1E ENTRANCE LANE ENTERING THE SIDE BY SIDE DRIVE–THRU IS TO BE 14'–0" MIN.

1F THE RADIUS FOR THE ISLAND TIP SHALL BE 1'–6".

2. SIDE BY SIDE DRIVE–THRU STANDARD 1.0 PAVEMENT MARKINGS:

2A 6" WIDE YELLOW PAINT STRIPE TO SPAN OUTER EDGE OF THE ENTIRE DRIVE–THRU LANE. LANE STARTS AT DRIVE–THRU ENTRANCE WHERE "McDONALD'S GATEWAY" SIGN IS LOCATED.

2B DOUBLE–HEADED ARROW PAVEMENT MARKING. STANDARD STRIPING MARKINGS ARE 7'–0" SHAFT, 7'–0" ARROW STEM AND 3'–0" FOR THE ARROW HEAD. TIP OF ARROW HEAD TO BE LOCATED AT CENTER OF EACH LANE.

2C MERGE POINT IS LOCATED WHERE TWO VEHICLES LEAVING EACH DT CANOPY/SPEAKER SIMULTANEOUSLY MEET. THE MERGE POINT STRIPING IS TO BE LOCATED BY OFFSETTING THE INNER PRIMARY LANE BACK OF CURB 9'–0" AND OFFSETTING THE OUTER LANE STRIPING 8'–0". AT THE INTERSECTION OF THESE OFFSETS, A 6" YELLOW STRIPE IS TO BE MARKED PERPENDICULAR TO THE OUTER LANE AS WELL AS THE INNER PRIMARY LANE.

2D THE WORDS "THANK YOU" ARE TO BE PLACED 8" FROM THE EDGE OF THE YELLOW STRIPE TO THE BOTTOM OF THE WORD "YOU".

2E THE 8" YELLOW STRIPE IS TO BE PLACED 40'–0" FROM THE CENTER LINE OF THE OPEN PRESENT WINDOW AND IS FOR PARKING CARS THAT ARE WAITING FOR ORDERS.

2F A CIRCLE DIRECTIONAL ARROW CENTERED ABOVE THE WORD "DRIVE THRU" USED TO INDICATE THE DRIVE THRU ENTRY POINT.

3. SIDE BY SIDE DRIVE–THRU STANDARD 1.0 EQUIPMENT POSITIONING FOR PRIMARY LANE:

3A MIN. 60'–0" (+5', 60'–65') LINEAR DISTANCE BETWEEN THE CENTER LINE OF THE DT CANOPY/SPEAKER FACE AND THE CENTER LINE OF THE OPEN ORDER BOOTH WINDOW AS MEASURED ALONG THE CENTER LINE OF THE LANE. THIS MAY ONLY BE INCREASED IN 20'–0" INCREMENTS (±5' FOR 80', 100', AND 120') TO A MAX OF 120'. 100'–0" IS OPTIMAL.

3B THE CENTER OF THE PRIMARY MENU BOARD FOUNDATION IS TO BE 5'–9" (5'–6" MIN. AND 6'–0" MAX.) FROM THE CENTER OF THE DT CANOPY/SPEAKER FOUNDATION WITH THE END CAP OF THE PRIMARY MENU BOARD 15" PREFERRED BUT NOT LESS THAN 12" FROM THE FACE OF CURB. .

3C THE PRIMARY MENU BOARD SHOULD BE AT AN ANGLE OF APPROXIMATELY 25° TO 35° ANGLE (35° PREFERRED) FROM A CAR POSITIONED AT THE DT CANOPY/SPEAKER AND WITH 100% VISIBILITY.

3D AUGER "McDONALD'S ORDER HERE CANOPY" CANOPY FOUNDATION TIGHT AGAINST BACK OF CURB. SEE MANUFACTURER/LOCAL SPECIFICATIONS FOR DETAILS.

3E A SINGLE BOLLARD SHOULD BE POSITIONED AT THE CORNER OF THE BUILDING ON THE DRIVE–THRU SIDE. IT SHOULD BE FLUSH AGAINST THE BUILDING AND FACE OF THE BOLLARD SHOULD BE TIGHT AGAINST THE BACK OF THE CURB.

3F AUGER "McDONALD'S GATEWAY" SIGN FOUNDATION TIGHT AGAINST BACK OF CURB. SEE MANUFACTURER/LOCAL SPECIFICATIONS FOR DETAILS.

3G THE DISTANCE BETWEEN THE TIP OF THE CURBED ISLAND AND THE CENTER LINE OF THE PRIMARY DT CANOPY/SPEAKER MUST BE 15'–0". THIS MEASUREMENT IS TAKEN PARALLEL TO THE INSIDE CURB FACE OF THE PRIMARY LANE.

3H THE PRIMARY LANE DETECTOR LOOP SHOULD BE PERPENDICULAR TO THE CENTER OF THE PRIMARY DT CANOPY/SPEAKER.

4. SIDE BY SIDE DRIVE–THRU STANDARD 1.0 EQUIPMENT POSITIONING FOR SECONDARY LANE:

4A TO POSITION THE SECONDARY DT CANOPY/SPEAKER, DRAW AN ARC WITH A 14' RADIUS THAT IS CENTERED FROM THE MIDPOINT OF THE ISLAND TIP. THEN OFFSET THE FACE OF THE CURB BY 24" TO DETERMINE THE LOCATION OF CENTER OF FOUNDATION OF THE SECONDARY DT CANOPY/SPEAKER.

4B WHEN THE SECONDARY DT CANOPY/SPEAKER IS LOCATED AT 14'–0" FROM THE TIP OF THE CURBED ISLAND, THE LOOP DETECTOR IS TO BE 2'–0" FORWARD OF THE DT CANOPY/SPEAKER CENTER LINE WITH THE LOOP FACING FORWARD AND THE DETECTOR LOOP PERPENDICULAR TO THE SECONDARY DT CANOPY/SPEAKER WHEN POSSIBLE.

4C THE CENTER OF THE SECONDARY MENU BOARD FOUNDATION SHALL BE 5'–9" (5'–6" MIN. AND 6'–0" MAX.) FROM CENTER OF THE DT CANOPY/SPEAKER FOUNDATION WITH THE END CAP OF THE SECONDARY MENU BOARD 15" PREFERRED BY NOT LESS THAN 12" FROM FACE OF CURB.

4D AUGER "McDONALD'S ORDER HERE" DT CANOPY/SPEAKER FOUNDATION TIGHT AGAINST BACK OF CURB. SEE MANUFACTURER/LOCAL SPECIFICATIONS FOR DETAILS.

4E THE SECONDARY MENU BOARD SHOULD BE AT AN ANGLE OF APPROXIMATELY 25° FROM A VEHICLE POSITIONED AT THE DT CANOPY/SPEAKER AND WITH 100% VISIBIILTY.

4F "ANY LANE, ANY TIME" BOLLARD SIGN MUST BE A MIN. OF 1'–6" FROM FACE OF CURB AT THE BEGINNING OF THE LANDSCAPE ISLAND. BOLLARD SIGN IS TO BE ORIENTED AT AN ANGLE OF 90° FROM THE CURB.

5. SIDE BY SIDE DRIVE–THRU STANDARD 1.0 DETECTOR LOOP:

5A DETECTOR LOOPS SHALL BE LOCATED AT THE CENTER OF THE OPENING WINDOW AT THE CASH AND PRESENTER BOOTHS.

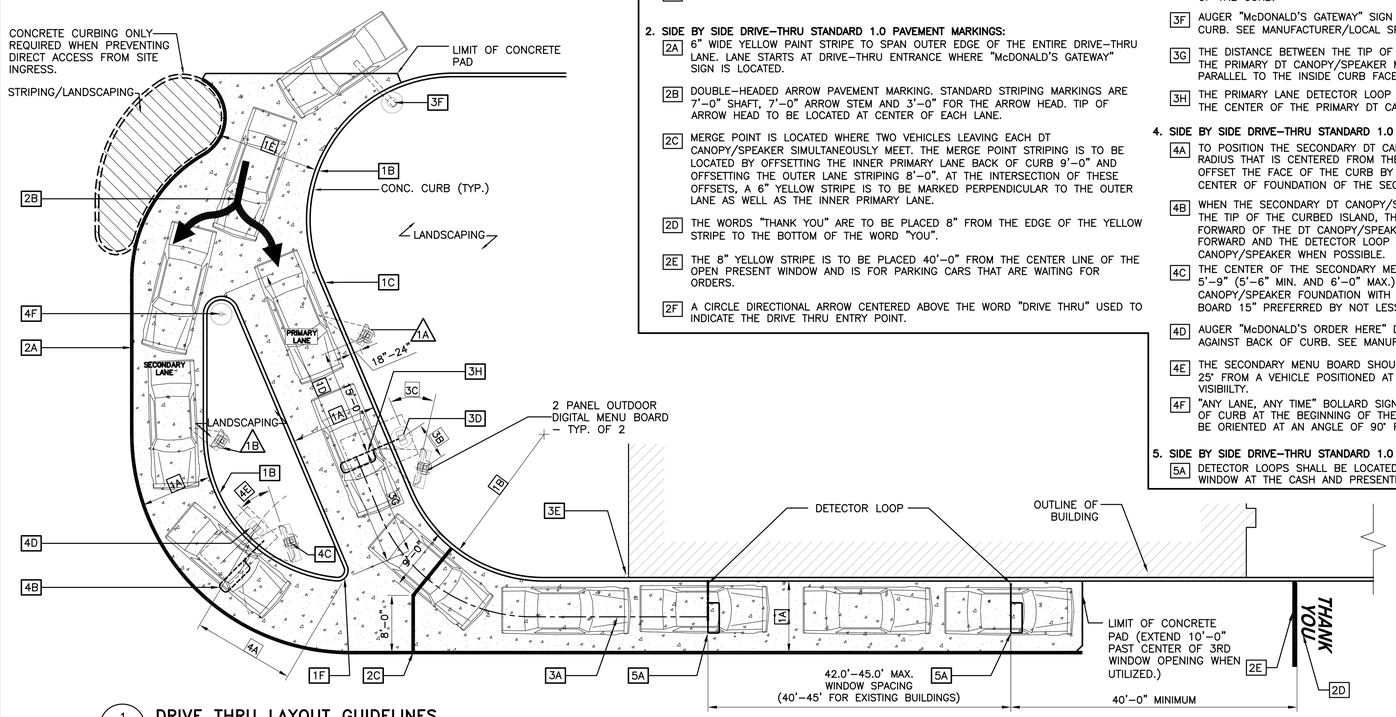

1 / DT1.0 **DRIVE THRU LAYOUT GUIDELINES**
1" = 10'–0"

SIDE BY SIDE DRIVE–THRU STANDARD 1.0 FEATURES:

1. SIDE BY SIDE DRIVE–THRU STANDARD 1.0 EQUIPMENT:

1A PRE–BROWSE BOARD MUST BE 18"–24" FROM FACE OF CURB. THE DISTANCE BETWEEN THE PRIMARY DT CANOPY/SPEAKER AND PRE–BROWSE BOARD IS TO BE 15' AS MEASURED ALONG THE FACE OF CURB. THIS IS MEASURED FROM THE CENTER OF THE PRE–BROWSE BOARD FOUNDATION TO THE CENTER OF THE DT CANOPY/SPEAKER FOUNDATION. THE ANGLE (APPROXIMATELY 50') OF THE PRE–BROWSE BOARD SHOULD MAXIMIZE VISIBILITY TO THE SECOND CAR FROM DT CANOPY/SPEAKER.

1B PRE–BROWSE BOARD MUST BE MIN. 12" FROM FACE OF CURB. THE DISTANCE BETWEEN THE SECONDARY DT CANOPY/SPEAKER AND PRE–BROWSE BOARD IS TO BE 15' AS MEASURED ALONG FACE OF THE CURB. THIS IS MEASURED FROM THE POINT PERPENDICULAR TO THE CENTER OF THE PRE–BROWSE BOARD FOUNDATION TO THE POINT PERPENDICULAR TO THE CENTER OF THE DT CANOPY/SPEAKER FOUNDATION. THE ANGLE OF THE PRE–BROWSE BOARD SHOULD MAXIMIZE VISIBILITY TO THE SECOND CAR FROM DT CANOPY/SPEAKER (PREFERRED 35').

GENERAL NOTES

1. DRIVE–THRU ELEMENTS:
   DT CANOPY/SPEAKER DRIVE–THRU PYLON/CLEARANCE POLE AND BOLLARD SIGN SHALL BE CONSISTENT WITH THE STANDARD BUILDING DESIGN DRIVE–THRU ELEMENTS.
   OTHER DESIGNS MAY NOT BE USED.
2. CONTRACTOR SHALL COORDINATE WITH APPLICABLE PLANS, McDONALD'S AREA CONSTRUCTION MANAGER, CONTENT SUPPLIER AND SIGNAGE SUPPLIER TO DETERMINE EXACT LOCATION, ORIENTATION, MOUNTING HEIGHTS, AND NUMBER OF BOARDS AND OTHER DRIVE–THRU ELEMENTS TO BE INSTALLED AT THIS SITE. ALL WORK TO BE COORDINATED WITH OTHER TRADES.
3. CONTACT McDONALD'S AREA CONSTRUCTION MANAGER FOR DRIVE–THRU ELEMENT FOOTING AND WIRING REQUIREMENTS NOT SHOWN. (INFORMATION ALSO AVAILABLE THROUGH VENDOR WEBSITES) SIGNAGE MANUFACTURER TO PROVIDE FOOTING ANCHORS & TEMPLATES TO G.C. PRIOR TO FOUNDATION POURING.
4. SEE DETAIL 2/DT1.0 FOR DETECTOR LOOP INFORMATION, ELECTRICAL SHEETS FOR LOW VOLTAGE CONDUIT DIAGRAM AND FOR DRIVE THRU POWER DIAGRAM; VENDOR'S SPECIFICATIONS SHALL GOVERN UPON ANY DISCREPANCIES.
5. CONTRACTOR TO COORDINATE THE RESPONSIBILITIES OF THE ELECTRICAL CONTRACTOR, CONTENT SUPPLIER AND THE SIGN SUPPLIER.
6. CONTRACTOR TO INSTALL PRE–FORMED, PRE–WIRED VEHICLE DETECTOR LOOP.
7. CONTRACTOR SHALL VERIFY CONDUIT SIZES REQUIRED BY VEHICLE LOOP DETECTOR SUPPLIER.

NOTES

1. VERIFY CONDUIT SIZES AND LAYOUT WITH DETECTOR LOOP MANUFACTURER.
2. CENTER VEHICLE DETECTOR LOOP IN DRIVE THRU LANE. INSTALL PER MFR. RECOMMENDATIONS.
3. NO STEEL (REBAR OR ELECTRICAL WIRE) SHALL BE USED WITHIN 2' OF LOOP.
4. DETECTOR LOOP MANUFACTURERS:
   DETECTOR LOOPS MAY BE BY ONE OF THE FOLLOWINGS COMPANIES OR EQUAL.
   3M: 1–800–328–0033
   HME: 1–800–848–4468
5. DETECTOR LOOP MATERIAL:
   PVC TUBING 1/2" I.D. 100 PSI LOOP MADE FROM ONE LENGTH OF THIN FOURTEEN GAUGE STRANDED WIRE. LEAD–IN IS PRE–TWISTED AT FACTORY.
6. DETECTOR LOOP CONSTRUCTION:
   FORMED WITH ONE CONTINUOUS LENGTH OF PVC WITH NO SHARP CORNERS AS DETAILED. WIRE LOOPED, FORMED, & PIGTAILED AS DETAILED.

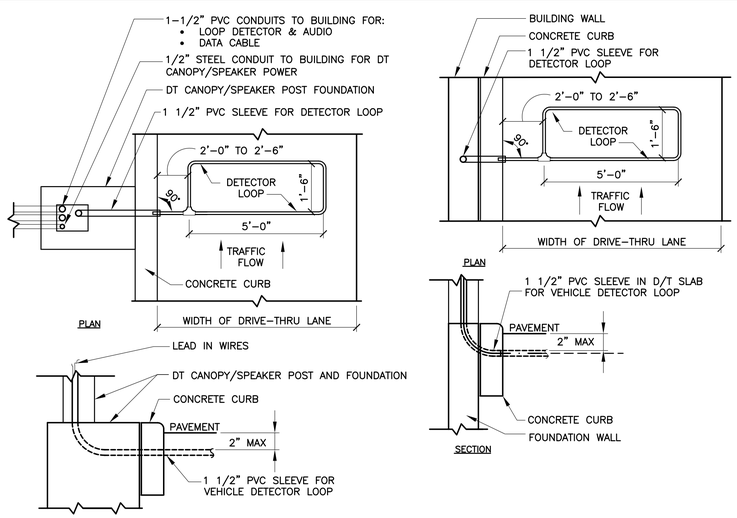

A – DT CANOPY/SPEAKER DETECTOR LOOP

B – DT WINDOW DETECTOR LOOP

2 / DT1.0 **DETECTOR LOOP DETAILS**
NOT TO SCALE

REV	DATE	DESCRIPTION	BY

PREPARED BY:

PREPARED FOR: **McDonald's USA, LLC**

© 2019 McDonald's USA, LLC

These drawings and specifications are the confidential and proprietary property of McDonald's USA, LLC and shall not be copied or reproduced without written authorization. The contract documents were prepared for use on this specific site in conjunction with its issue date and are not to be used for any other purpose or at any other site. Use of these drawings for reference or example on another project requires the services of properly licensed architects and engineers. Reproduction of the contract documents for reuse on another project is not authorized.

DRAWN BY –
STD ISSUE DATE 2019_11
REVIEWED BY RH
DATE ISSUED 11 15 2019

TITLE 2019 STANDARD BUILDING – BB20 4597–WOOD/WOOD

DESCRIPTION
WOOD BEARING WALLS W/4" BRICK EXTERIOR FINISH & CI
WOOD ROOF TRUSS FRAMING
E.I.F.S./BATTEN/METAL PANEL/BRICK EXTERIOR FINISH

SITE ID 015–0071
SITE ADDRESS 605 South 7th St. Kansas City,KS

SHEET NO. 015–0071.00.0
DT1.0
DRIVE–THRU DETAILS

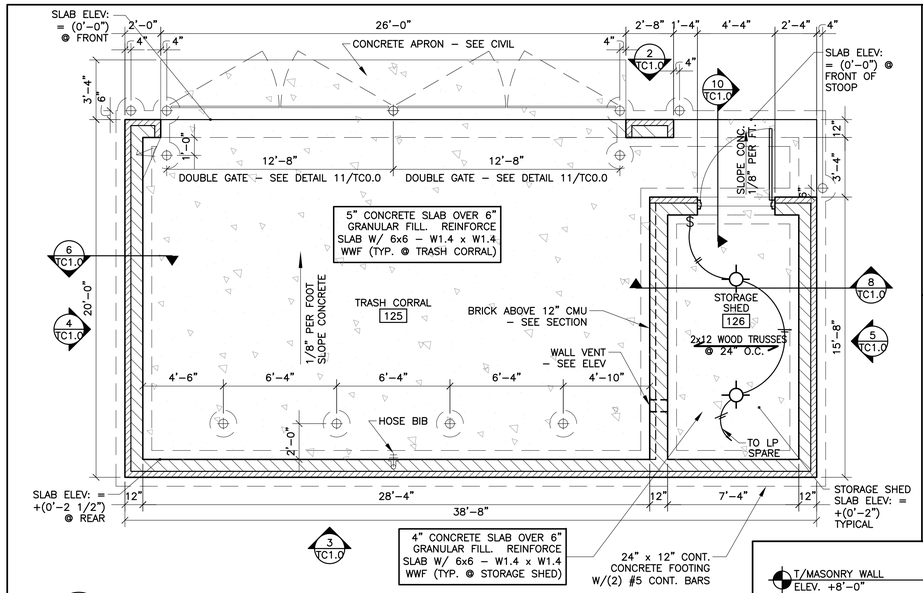

1 TC1.0 **TRASH CORRAL PLAN W/ SHED**
1/4"=1'-0"

NOTE:
1. HOLLOW METAL DOOR SHALL BE 4'-0"X7'-0"X 1 3/4" WITH FRAME, THRESHOLD, CONTINUOUS HINGE, LEVER HANDLE AND STOREROOM LOCKSET
2. INCANDESCENT LIGHT FIXTURE SHALL BE FURNISHED. WIRE GUARD, 40 WATT LAMP,AND SURFACE MOUNT. PASS & SEMORE–#44 OR LIGHTING LTD–#1742–2000 AWG

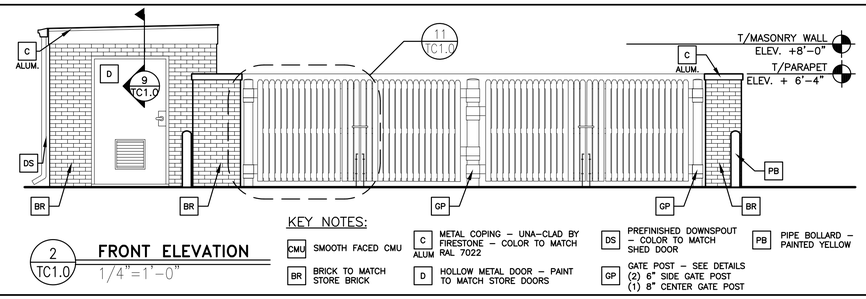

2 TC1.0 **FRONT ELEVATION**
1/4"=1'-0"

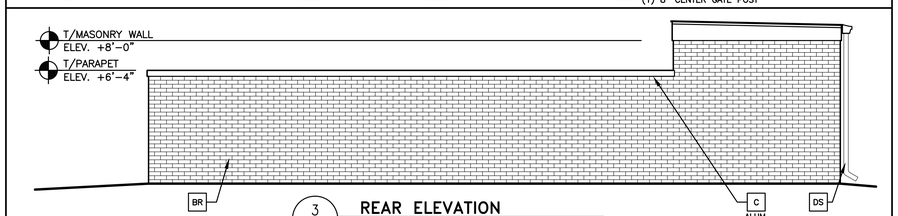

3 TC1.0 **REAR ELEVATION**
1/4"=1'-0"

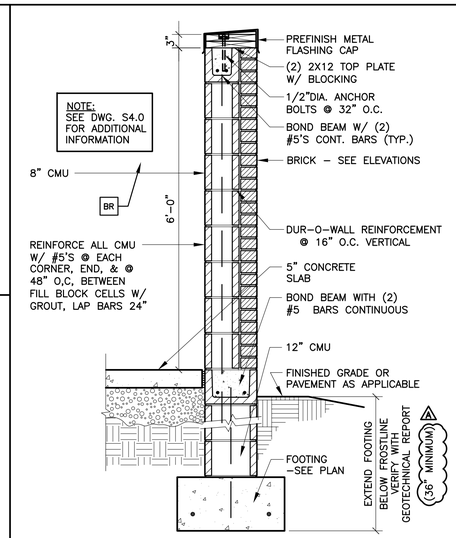

6 TC1.0 **TYPICAL WALL SECTION**
3/4"= 1'-0"

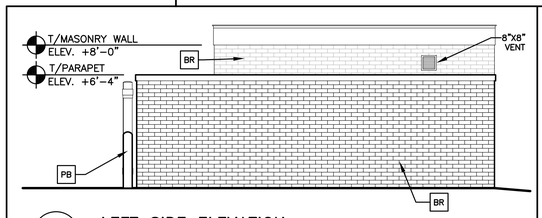

4 TC1.0 **LEFT SIDE ELEVATION**
1/4"=1'-0"

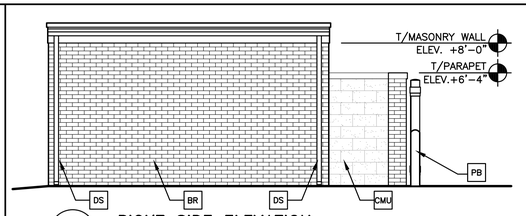

5 TC1.0 **RIGHT SIDE ELEVATION**
1/4"=1'-0"

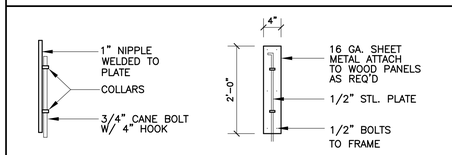

7 TC1.0 **BOLT DETAILS**
NOT TO SCALE

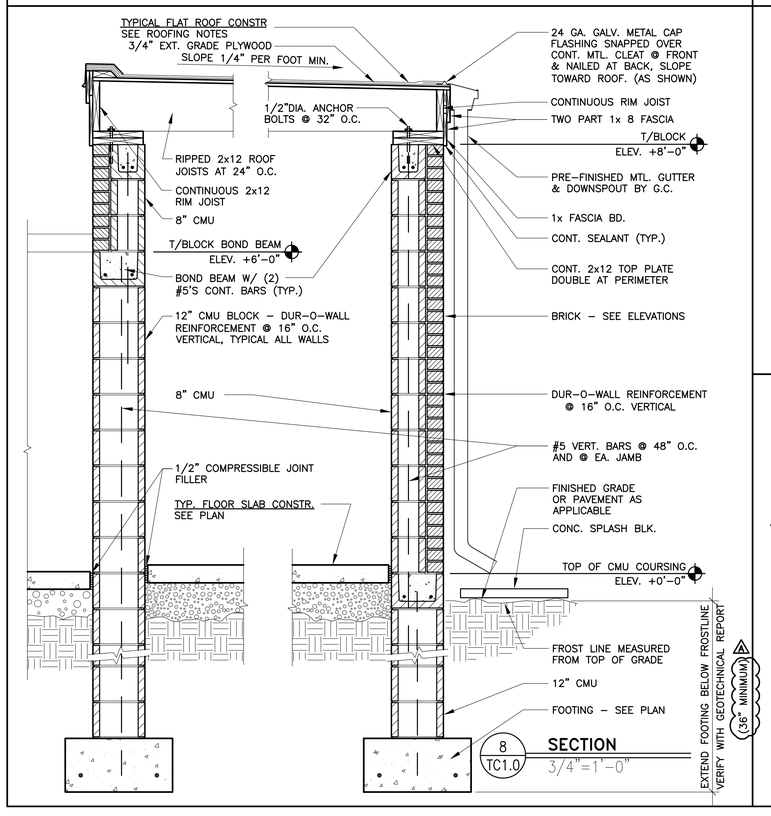

8 TC1.0 **SECTION**
3/4"=1'-0"

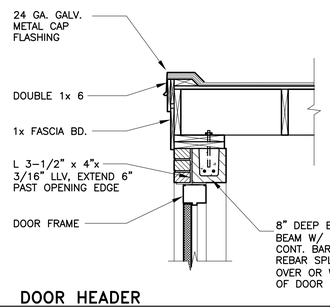

9 TC1.0 **DOOR HEADER**
3/4"=1'-0"

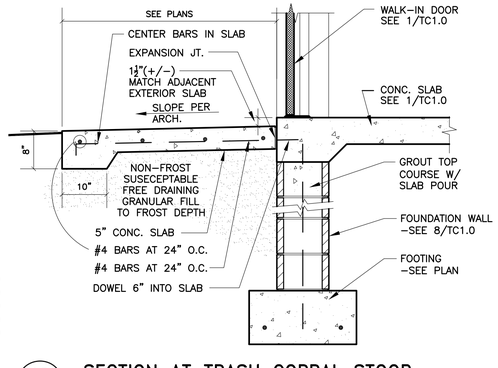

10 TC1.0 **SECTION AT TRASH CORRAL STOOP**
N.T.S.

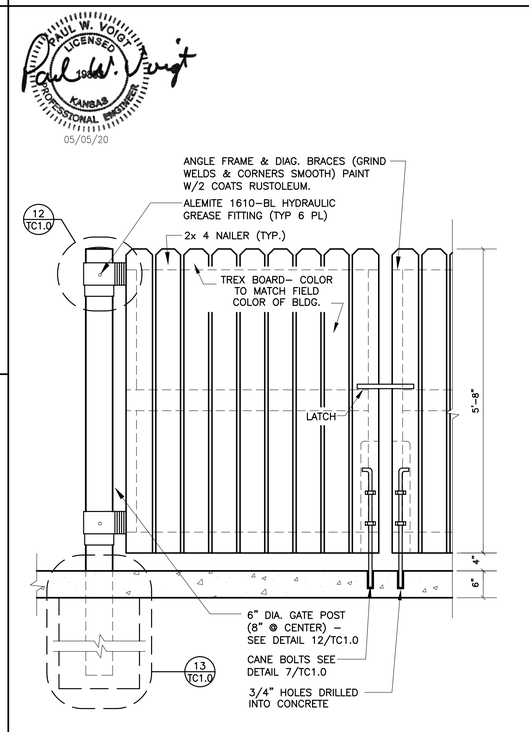

11 TC1.0 **TYP. GATE DETAIL**
1/2"=1'-0"

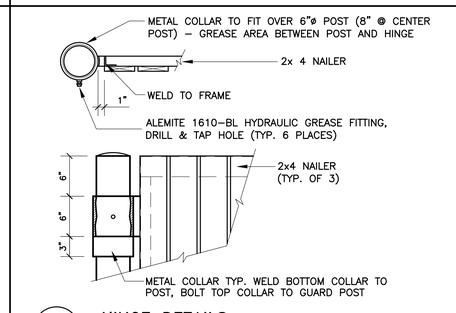

12 TC1.0 **HINGE DETAILS**
NOT TO SCALE

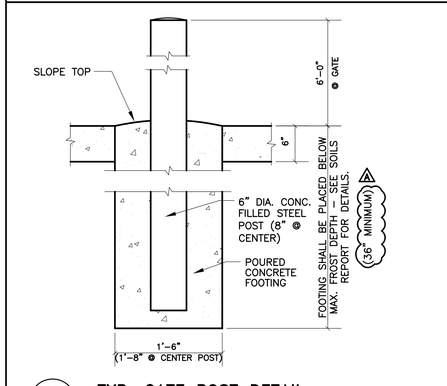

13 TC1.0 **TYP. GATE POST DETAIL**
1"=1'-0"

REV	DATE	DESCRIPTION	BY
A	05/05/20	CIVIL & PLAN REVIEW COMMENTS	DIA
-	01/23/20	PERMIT SET	DIA
-	01/13/20	USRO PROGRESS SET REVIEW	DIA

I hereby certify that this plan, specification or report was prepared by me or under my direct supervision and that I am a duly registered ARCHITECT under the laws of the State of Kansas.

Signature
05/05/20
Date
Registration Number

PREPARED BY:
reprise DESIGN
Architecture, INC.
ARCHITECTURE & PLANNING
12400 PORTLAND AVENUE SOUTH, SUITE 100
BURNSVILLE, MN 55337
EMAIL: DATA@REPRISEDESIGN.COM
PHONE: (952) 252-4042
FAX: (952) 252-4043

PREPARED FOR:
McDonald's USA, LLC

©2020 McDonald's USA, LLC
These drawings and specifications are the confidential and proprietary property of McDonald's USA, LLC and shall not be copied or reproduced without written authorization. The contract documents were prepared for use on this specific site in accordance with McDonald's USA, LLC standards. Any reuse on a different site or at a later time. Use of these drawings for reference or example on another project requires the services of a licensed architect or engineer to review and modify the contract documents for reuse on another project is not authorized.

DRAWN BY	STD ISSUE DATE
DIA	2019_11
REVIEWED BY: KD	DATE ISSUED 01/23/20

TITLE: 2019 STANDARD BUILDING – BB20 4597F10–WOOD/WOOD

DESCRIPTION	SITE ADDRESS	RQ#19175
WOOD BEARING WALLS W/FIBER CEMENT SIDING & CI		
WOOD ROOF TRUSS FRAMING		
FIBER CEMENT PANEL/BATTEN/LAP/DOLIC PANEL/BRICK, EXT. FINISH		
SITE ID 015–0071	605 SOUTH 7TH STREET, KANSAS CITY, KS	

SHEET NO. 015–0071.00.A
TC1.0
TRASH CORRAL

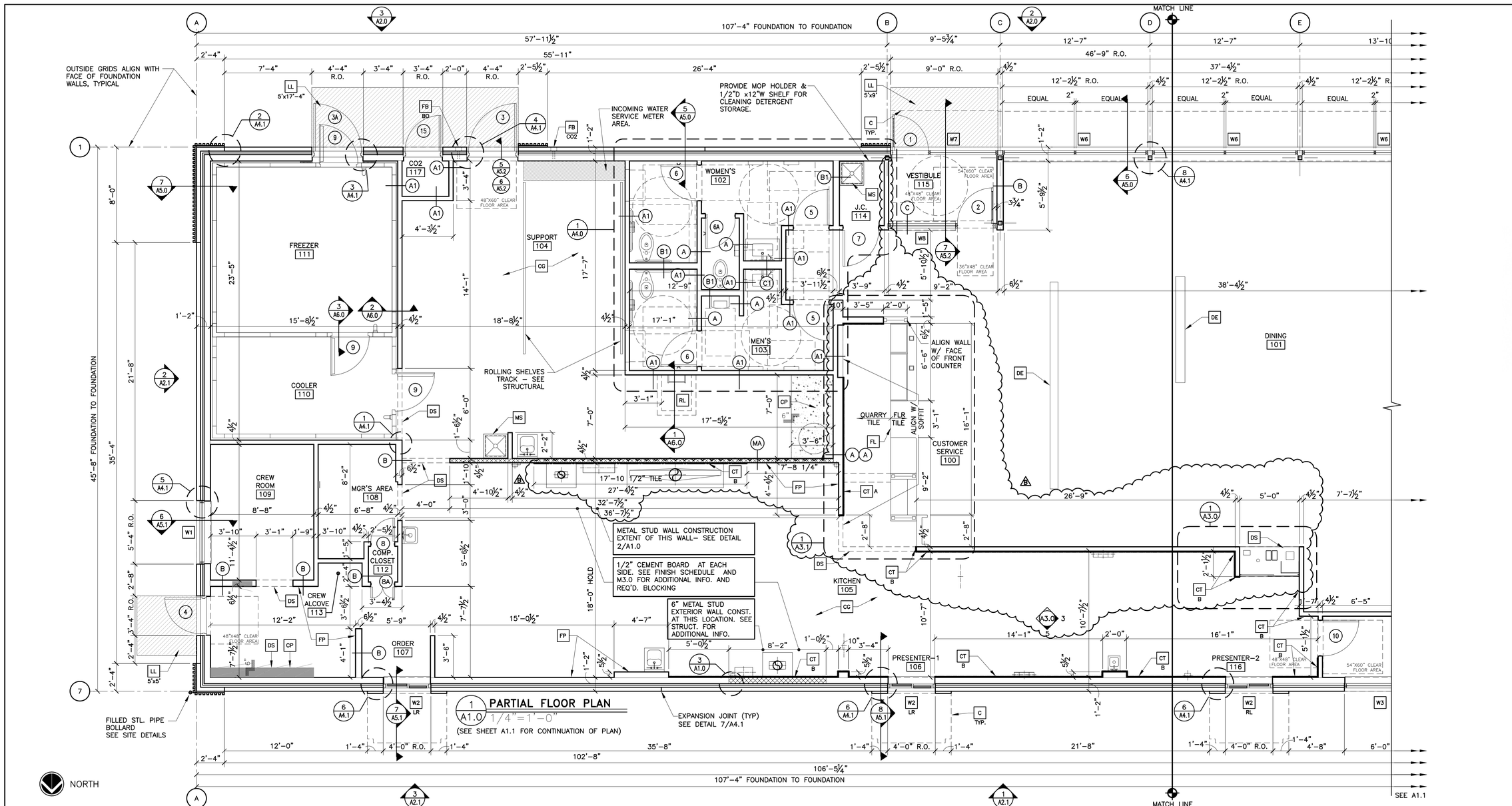

1 A1.0 PARTIAL FLOOR PLAN 1/4"=1'-0"

(SEE SHEET A1.1 FOR CONTINUATION OF PLAN)

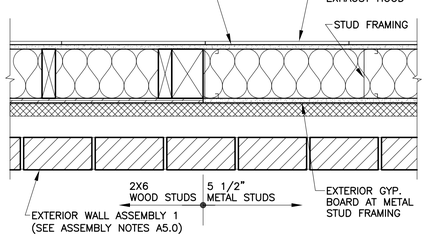

3 A1.0 TRANSITON DETAIL 1 1/2"=1'-0"

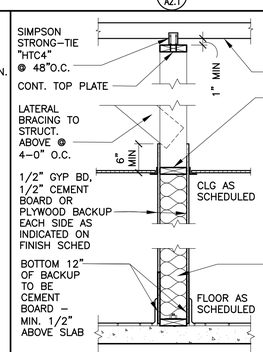

2 A1.0 INTERIOR PARTITION 3/4"=1'-0"

KEY NOTES

- C — ALUMINUM CANOPY SYSTEM ABOVE – SEE 4/A5.0 FOR NOTES – SEE ROOF PLAN FOR DIMENSIONS, SEE ELEVATION FOR COLORS AND FASCIA LOCATIONS
- CG — G.C. TO PROVIDE 4"x4"x5'-0" HIGH STAINLESS STEEL CORNER GUARDS AT ALL EXPOSED LOCATIONS IN KITCHEN/SUPPORT AREA. CORNER GUARDS TO START AT FINISH FLOOR. ATTACH WITH WOOD SCREWS INTO WOOD BLOCKING BULLNOSE COVE BASE WHERE TILE MEETS STAINLESS STEEL CORNER – SEE DETAIL 4/A6.0
- CP — CONCRETE EQMT PAD – SEE STRUCTURAL & DETAIL 5/A6.0
- CT A — WALL TILE: CERAMIC WALL TILE, SIZE: 4"x12", PATTERN: STACK BOND, GROUT: MAPEI ULTRACOLOR PLUS – JOINT TO BE 1/8" MAX. SEE DECOR DRAWINGS FOR TILE AND GROUT COLOR SPEC
- CT B — WALL TILE: CROSSVILLE – COLOR BY NUMBERS, COLOR: INTUITIVE GRAY, SIZE: 4"x12", PATTERN: RUNNING BOND, GROUT: MAPEI 02 PEWTER – JOINT TO BE 1/8" MAX. USE THIS TILE WHEN HIGH LRV IS REQUIRED COORDINATE WITH McDONALD'S AREA CONSTRUCTION MANAGER
- DE — DECOR ELEMENT– VERIFY SIZE AND PLACEMENT WITH DECOR PLANS
- DS — DROPPED SOFFIT ABOVE – SEE REFLECTED CEILING PLAN
- FB CO2 — CO2 FILL BOX (EQUIPMENT SCHEDULE ITEM 49.00)
- FB BO — OPTIONAL BULK OIL FILL BOX (EQPM SCHEDULE ITEM 700.18) CONFIRM USE WITH MCDONALD'S AREA CONSTRUCTION MANAGER
- FL — FLOOR LINE – CHANGE IN MATERIAL – SEE DECOR DRAWINGS
- FP — FIBERGLASS REINFORCED PLASTIC (FRP) – PANOLAM, GRAY SMOOTH, CLASS C, .075. REFER TO ROOM FINISH SCHEDULE SHEET A6.1 FOR INSTALLATION LOCATIONS. FOR ORDERING, CONTACT KIMBERLY LAWSON Kimberly_Lawson@panolam.com 1-866-925-4377
- LL 5'x5' — LEVEL LANDING @ EXT. DOOR W/ MAX. 2% RUNNING/CROSS SLOPE AWAY FROM BUILDING; SIZE OF LANDING
- MS — MOP SINK – SEE DETAIL 8/A6.1 AND PLUMBING DRAWINGS.
- RL — ROOF ACCESS LADDER W/HATCH ABOVE SEE STRUCTURAL FRAMING PLAN FOR LOCATING DIMENSIONS
- Wx — EXTERIOR WINDOW ASSEMBLY – SEE A2.0, A2.1 & 4/A5.0 FOR ADDITIONAL NOTES

SYMBOL LEGEND

- (A) — PARTITION TYPE TAG SEE 2/A1.0
- — — — EXTENT OF WALL TILE – SEE A3.0, A4.2 & A6.1
- (7) — DOOR TAG – SEE DOOR SCHEDULE ON A6.0
- (X) — KEY NOTE

GENERAL NOTES

1. EXTERIOR DIMENSIONS ARE TO COLUMN REFERENCE LINES AND EXTERIOR FACE OF MASONRY UNLESS OTHERWISE NOTED. INTERIOR DIMENSIONS ARE TO FACE OF INTERIOR WALL BOARD
2. SEE 4/A5.0 FOR EXTERIOR WALL ASSEMBLY TYPES. SEE 2/A1.0 FOR INTERIOR PARTITION TYPES. INTERIOR PARTITIONS ARE TYPE 'A' UNLESS NOTED OTHERWISE.
3. SEE EXTERIOR ELEVATIONS FOR WINDOW TYPES
4. SEE SHEET A6.0 FOR DOOR SCHEDULE AND SHEET A6.1 FOR ROOM FINISH SCHEDULES
5. SEE SITE PLAN FOR SIDEWALKS, RAMPS, ETC.
6. GC TO PROVIDE ADA SIGNAGE PACKAGE AND INSTALL SIGNS AT LOCATIONS AND POSITIONS INDICATED IN PACKAGE OR AS REQUIRED BY LOCAL CODES. SIGNAGE PACKAGE SUPPLIED BY: FORREST PERMA-SIGN 1-800-214-8765; 9292 1ST ST., BOX 588, NEW ROCHELLE, NY 10802; www.forrestpermasigns.com
7. MAXIMUM OCCUPANCY SIGN TO BE POSTED PER LOCAL CODE. SIGN FURNISHED AND INSTALLED BY GENERAL CONTRACTOR.
8. ALL HANDSINK LOCATIONS SHALL HAVE CEMENT BOARD BACKING 48" IN HEIGHT A.F.F.
9. GC TO COORDINATE ALL REQUIRED BLOCKING FOR WALL HUNG EQUIPMENT, SHELVES, ETC. FOR PROPER INSTALLATION HEIGHTS.
10. KNOX BOX TO BE INSTALLED BY GENERAL CONTRACTOR PER LOCAL CODE AS REQUIRED. MODEL AND LOCATION TO BE COORDINATED WITH FIRE MARSHALL.
11. DASHED LINES @ DOORS, RESTROOMS, & FIXTURES REPRESENT CLEAR FLOOR MANEUVERING CLEARANCES AS REQUIRED BY THE ACCESSIBILITY CODE. CLEARANCES MUST BE MAINTAINED WITHOUT EXCEPTION. IF CONDITIONS PREVENT ANY CLEAR FLOOR SPACE FROM BEING MAINTAINED, CONTACT THE ARCHITECT FOR RESOLUTION.

REV	DATE	DESCRIPTION	BY
B	12/03/20	SERVICE AREA OPTIMIZATION	DIA
-	11/13/20	USRD SAO SET REVIEW	DIA
A	05/05/20	CIVIL & PLAN REVIEW COMMENTS	DIA
-	01/23/20	PERMIT SET	DIA
-	01/13/20	USRD PROGRESS SET REVIEW	DIA

I hereby certify that this plan, specification or report was prepared by me or under my direct supervision and that I am a duly registered ARCHITECT under the laws of the State of Kansas.

Signature — Date 12/03/20 — Registration Number

PREPARED BY: reprise DESIGN Architecture, INC.
ARCHITECTURE & PLANNING
12400 PORTLAND AVENUE SOUTH, SUITE 100
BURNSVILLE, MN. 55337
EMAIL: DATA@REPRISEDESIGN.COM
PHONE: (952) 252-4042
FAX: (952) 252-4043

PREPARED FOR: McDonald's USA, LLC

©2020 McDonald's USA, LLC
These drawings and specifications are the confidential and proprietary property of McDonald's USA, LLC. and shall not be copied or reproduced without written authorization. The contract documents were prepared for use on this specific site in connection with McDonald's USA, LLC. Any modification or reuse on a different site or at a later time. Use of these drawings for reference or example on another project requires the services of a qualified architect to make appropriate modifications to the contract documents for reuse on another project is not authorized.

DRAWN BY DIA | STD ISSUE DATE 2019_11 | REVIEWED BY KD | DATE ISSUED 01/23/20 | RQ#19175

TITLE: 2019 STANDARD BUILDING – BB20 4597F10-WOOD/WOOD

DESCRIPTION: WOOD BEARING WALLS W/FIBER CEMENT SIDING & CI WOOD ROOF TRUSS FRAMING FIBER CEMENT PANEL/BATTEN/ALPOLIC PANEL/BRICK EXT. FINISH

SITE ID: 015-0071 | SITE ADDRESS: 605 SOUTH 7TH STREET, KANSAS CITY, KS

015-0071.00.B

SHEET NO. A1.0 FLOOR PLAN

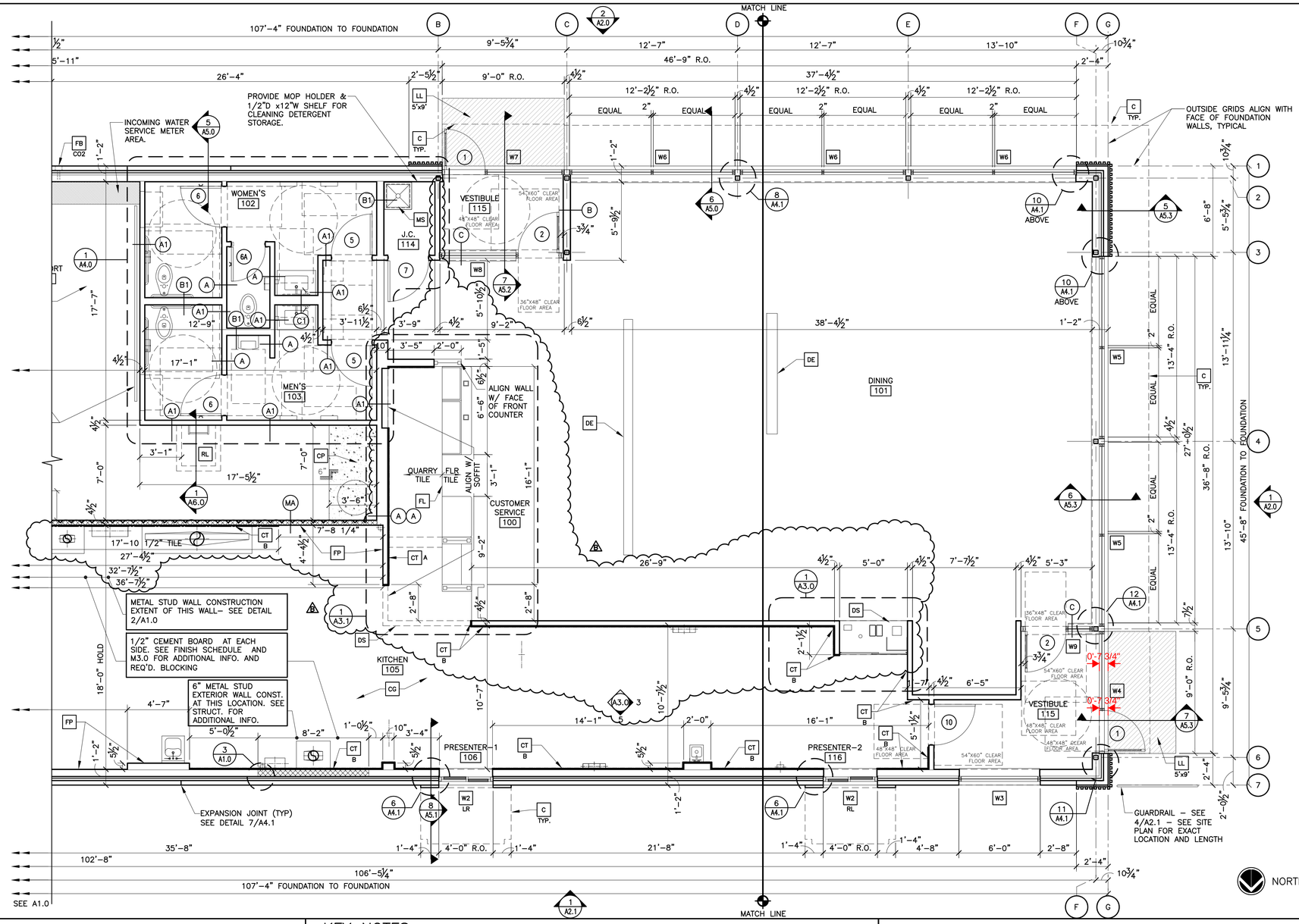

1 A1.1 **PARTIAL FLOOR PLAN**
1/4"=1'-0"
(SEE SHEET A1.0 FOR CONTINUATION OF PLAN)

KEY NOTES

- **C** — ALUMINUM CANOPY SYSTEM ABOVE – SEE 4/A5.0 FOR NOTES – SEE ROOF PLAN FOR DIMENSIONS, SEE ELEVATION FOR COLORS AND FASCIA LOCATIONS
- **CG** — G.C. TO PROVIDE 4"x4"x5'-0" HIGH STAINLESS STEEL CORNER GUARDS AT ALL EXPOSED LOCATIONS IN KITCHEN/SUPPORT AREA. CORNER GUARDS TO START AT FINISH FLOOR. ATTACH WITH WOOD SCREWS INTO WOOD BLOCKING BULLNOSE COVE BASE WHERE TILE MEETS STAINLESS STEEL CORNER – SEE DETAIL 4/A6.0
- **CP** — CONCRETE EQMT PAD – SEE STRUCTURAL & DETAIL 5/A6.0
- **CT A** — WALL TILE: CERAMIC WALL TILE, SIZE: 4"x12", PATTERN: STACK BOND, GROUT: MAPEI ULTRACOLOR PLUS – JOINT TO BE 1/8" MAX. SEE DECOR DRAWINGS FOR TILE AND GROUT COLOR SPEC
- **CT B** — WALL TILE: CROSSVILLE – COLOR BY NUMBERS, COLOR: INTUITIVE GRAY, SIZE: 4"x12", PATTERN: RUNNING BOND, GROUT: MAPEI 02 PEWTER – JOINT TO BE 1/8" MAX. USE THIS TILE WHEN HIGH LRV IS REQUIRED COORDINATE WITH McDONALD'S AREA CONSTRUCTION MANAGER
- **DE** — DECOR ELEMENT– VERIFY SIZE AND PLACEMENT WITH DECOR PLANS
- **DS** — DROPPED SOFFIT ABOVE – SEE REFLECTED CEILING PLAN
- **FB CO2** — CO2 FILL BOX (EQUIPMENT SCHEDULE ITEM 49.00)
- **FB BO** — OPTIONAL BULK OIL FILL BOX (EQPM SCHEDULE ITEM 700.18) CONFIRM USE WITH MCDONALD'S AREA CONSTRUCTION MANAGER
- **FL** — FLOOR LINE – CHANGE IN MATERIAL – SEE DECOR DRAWINGS
- **FP** — FIBERGLASS REINFORCED PLASTIC (FRP) – PANOLAM, GRAY SMOOTH, CLASS C, .075. REFER TO ROOM FINISH SCHEDULE SHEET A6.1 FOR INSTALLATION LOCATIONS. FOR ORDERING, CONTACT KIMBERLY LAWSON Kimberly_Lawson@panolam.com 1-866-925-4377
- **LL 5'x5'** — LEVEL LANDING @ EXT. DOOR W/ MAX. 2% RUNNING/CROSS SLOPE AWAY FROM BUILDING; SIZE OF LANDING
- **MS** — MOP SINK – SEE DETAIL 8/A6.1 AND PLUMBING DRAWINGS.
- **RL** — ROOF ACCESS LADDER W/HATCH ABOVE SEE STRUCTURAL FRAMING PLAN FOR LOCATING DIMENSIONS
- **Wx** — EXTERIOR WINDOW ASSEMBLY – SEE A2.0, A2.1 & 4/A5.0 FOR ADDITIONAL NOTES

SYMBOL LEGEND

- (A) — PARTITION TYPE TAG SEE 2/A1.0
- EXTENT OF WALL TILE – SEE A3.0, A4.2 & A6.1
- (7) — DOOR TAG – SEE DOOR SCHEDULE ON A6.0
- (X) — KEY NOTE

GENERAL NOTES

1. EXTERIOR DIMENSIONS ARE TO COLUMN REFERENCE LINES AND EXTERIOR FACE OF MASONRY UNLESS OTHERWISE NOTED. INTERIOR DIMENSIONS ARE TO FACE OF INTERIOR WALL BOARD
2. SEE 4/A5.0 FOR EXTERIOR WALL ASSEMBLY TYPES. SEE 2/A1.0 FOR INTERIOR PARTITION TYPES. INTERIOR PARTITIONS ARE TYPE 'A' UNLESS NOTED OTHERWISE.
3. SEE EXTERIOR ELEVATIONS FOR WINDOW TYPES
4. SEE SHEET A6.0 FOR DOOR SCHEDULE AND SHEET A6.1 FOR ROOM FINISH SCHEDULES
5. SEE SITE PLAN FOR SIDEWALKS, RAMPS, ETC.
6. GC TO PROVIDE ADA SIGNAGE PACKAGE AND INSTALL SIGNS AT LOCATIONS AND POSITIONS INDICATED IN PACKAGE OR AS REQUIRED BY LOCAL CODES. SIGNAGE PACKAGE SUPPLIED BY: FORREST PERMA-SIGN 1-800-214-8765; 9292 1ST ST., BOX 588, NEW ROCHELLE, NY 10802; www.forrestpermasigns.com
7. MAXIMUM OCCUPANCY SIGN TO BE POSTED PER LOCAL CODE. SIGN FURNISHED AND INSTALLED BY GENERAL CONTRACTOR.
8. ALL HANDSINK LOCATIONS SHALL HAVE CEMENT BOARD BACKING 48" IN HEIGHT A.F.F.
9. GC TO COORDINATE ALL REQUIRED BLOCKING FOR WALL HUNG EQUIPMENT, SHELVES, ETC. FOR PROPER INSTALLATION HEIGHTS.
10. KNOX BOX TO BE INSTALLED BY GENERAL CONTRACTOR PER LOCAL CODE AS REQUIRED. MODEL AND LOCATION TO BE COORDINATED WITH FIRE MARSHALL.
11. DASHED LINES @ DOORS, RESTROOMS, & FIXTURES REPRESENT CLEAR FLOOR MANEUVERING CLEARANCES AS REQUIRED BY THE ACCESSIBILITY CODE. CLEARANCES MUST BE MAINTAINED WITHOUT EXCEPTION. IF CONDITIONS PREVENT ANY CLEAR FLOOR SPACE FROM BEING MAINTAINED, CONTACT THE ARCHITECT FOR RESOLUTION.

REV	DATE	DESCRIPTION	BY
.	.	.	.
.	.	.	.
B	12/03/20	SERVICE AREA OPTIMIZATION	DIA
.	11/13/20	USRD SAO SET REVIEW	DIA
A	05/05/20	CIVIL & PLAN REVIEW COMMENTS	DIA
.	01/23/20	PERMIT SET	DIA
.	01/13/20	USRD PROGRESS SET REVIEW	DIA

I hereby certify that this plan, specification or report was prepared by me or under my direct supervision and that I am a duly registered ARCHITECT under the laws of the State of Kansas.

Signature: BRIAN A. ROBBINS, ARCHITECT, 19175
Date: 12/03/20
Registration Number

PREPARED BY:
reprise DESIGN
Architecture, INC.
ARCHITECTURE & PLANNING
12400 PORTLAND AVENUE SOUTH, SUITE 100
BURNSVILLE, MN. 55337
EMAIL: DATA@REPRISEDESIGN.COM
PHONE: (952) 252-4042
FAX: (952) 252-4043

PREPARED FOR:
McDonald's USA, LLC

©2020 McDonald's USA, LLC
These drawings and specifications are the confidential and proprietary property of McDonald's USA, LLC and shall not be copied or reproduced without written authorization. The contract documents were prepared for use on this specific site in connection with McDonald's USA, LLC and shall not be used on a different site or at a later time. Use of these drawings for reference or example on another project requires the services of a licensed design professional to review and modify the contract documents for reuse on another project is not authorized.

DRAWN BY	STD ISSUE DATE	REVIEWED BY	DATE ISSUED	PROJ#
DIA	2019_11	KD	01/23/20	19175

TITLE: 2019 STANDARD BUILDING – BB20
4597F10-WOOD/WOOD
DESCRIPTION: WOOD BEARING WALLS W/FIBER CEMENT SIDING & CI WOOD ROOF TRUSS FRAMING FIBER CEMENT PANEL/BATTEN/ALPOLIC PANEL/BRICK EXT. FINISH
SITE ID: 015-0071
SITE ADDRESS: 605 SOUTH 7TH STREET, KANSAS CITY, KS

SHEET NO. 015-0071.00.B
A1.1
FLOOR PLAN

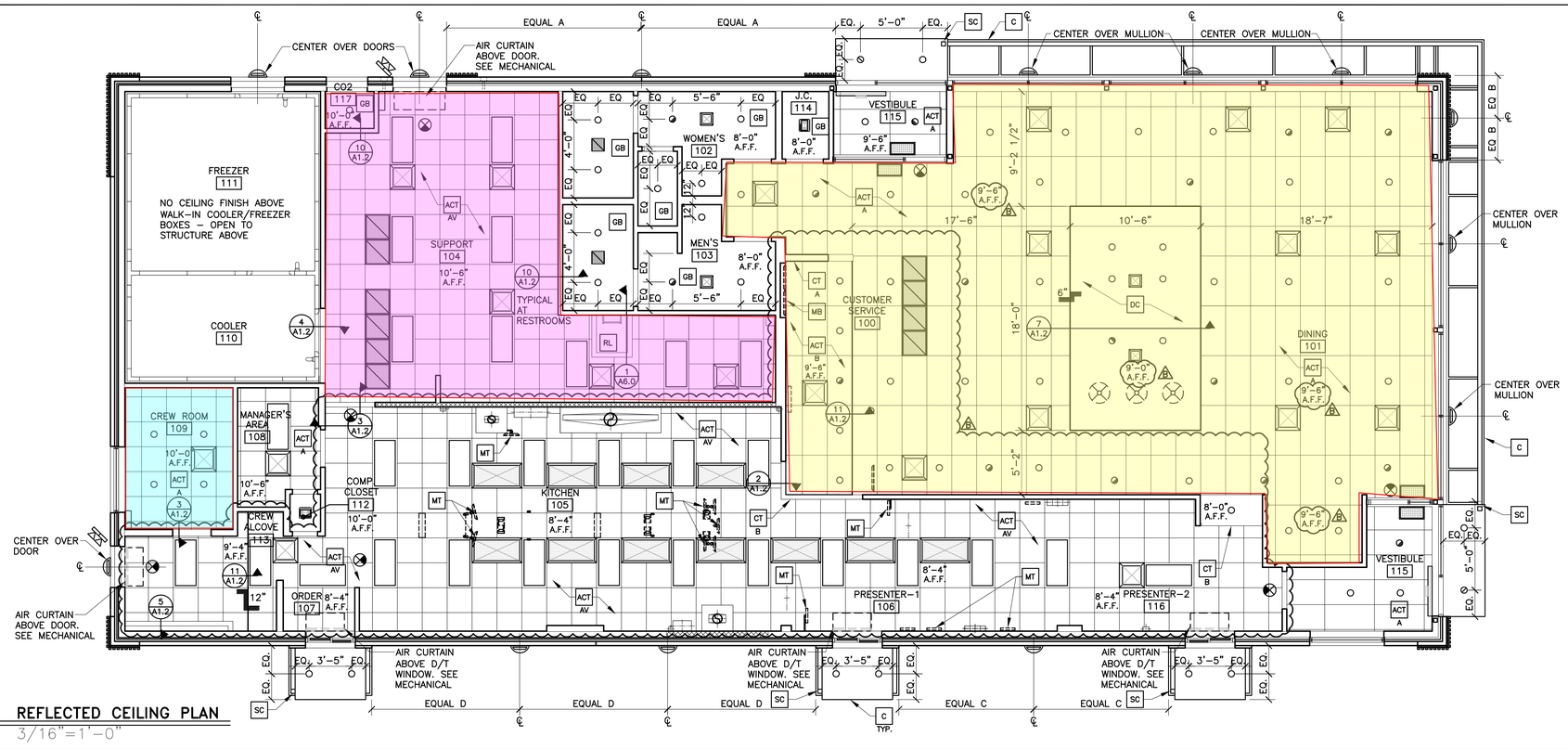

1 A1.2 **REFLECTED CEILING PLAN**
3/16"=1'-0"

KEY NOTES

- ACT A — ACOUSTICAL CEILING TILE – 24"X48". VERIFY FINISHES WITH DECOR COMPANY
- ACT AV — ACOUSTICAL CEILING TILE: VINYL FACED USG 24"X24" CLEAN ROOM CLIMA-PLUS. UNPERFORATED. SMOOTH TEXTURE
  COLOR: WHITE
  GRID: USG 15/16" DX/DXL COLOR: WHITE
- ACT B — ACOUSTICAL CEILING TILE: USG 24"X48" PREMIER HI-LITE CLIMAPLUS KAPOK PANELS.
  COLOR: FLAT BLACK 205
  GRID: USG 15/16" DX/DXL COLOR: BLACK
- C — ALUMINUM CANOPY WITH INTEGRAL GUTTER AND SCUPPER – SEE 4/A5.0 FOR NOTES – SEE ROOF PLAN FOR DIMENSIONS – SEE ELEVATION FOR COLOR AND FASCIA LOCATIONS
- CT A — WALL TILE: CERAMIC TILE
  SIZE: 4"x12", PATTERN: STACK BOND
  GROUT: MAPEI ULTRACOLOR PLUS – JOINT TO BE 1/16" MAX.
  SEE DECOR DRAWINGS FOR TILE AND GROUT COLOR SPEC.
- CT B — WALL TILE: CERAMIC TILE
  SIZE: 4"x12", PATTERN: STACK BOND
  GROUT: MAPEI ULTRACOLOR PLUS – JOINT TO BE 1/16" MAX.
  SEE DECOR DRAWINGS FOR TILE AND GROUT COLOR SPEC.
- DC — SUSPENDED DECORATIVE CEILING TREATMENT – SEE DECOR DRAWINGS FOR ADDITIONAL INFORMATION
- DS — DROPPED SOFFIT
- DC-WH — BOTTOM TO ALIGN WITH GYP BD AT EXTERIOR WINDOW HEAD
  MAY BE REPLACED BY ELEMENT BY DECOR SUPPLIER – CONFIRM WITH AREA CONSTRUCTION MANAGER
- GB — GYPSUM BOARD CEILING
- MB — MENU BOARD WITH BEZELS BY OTHERS UNDER SEPARATE PERMIT – SEE ELEC PLANS
- MT — CEILING MOUNTED MONITOR: A) VERIFY MONITOR LOCATIONS WITH McDONALD'S PROJECT MANAGER PRIOR TO INSTALLATION. B) SEE DETAIL 6/A1.2 FOR INSTALLATION METHOD
- RL — ROOF LADDER OPENING
- SC — INTERGRAL GUTTER SCUPPER

GENERAL NOTES

1. SEE SHT A6.1 FOR CEILING FINISHES.
2. SEE SHT A1.0 FOR MENU BOARD DROPPED SOFFIT LOCATION DIMENSIONS
3. GENERAL CONTRACTOR SHALL COORDINATE HVAC DIFFUSER LOCATION WITH DECOR & MECHANICAL PLANS AND REPORT ANY DISCREPANCIES TO ARCHITECT.
4. REFERENCE MECHANICAL AND ELECTRICAL DRAWINGS FOR DIFFUSER AND LIGHTING INFORMATION.
5. PROVIDE USG V15 CEILING TILE RETENTION CLIPS IN ALL VESTIBULE AREAS

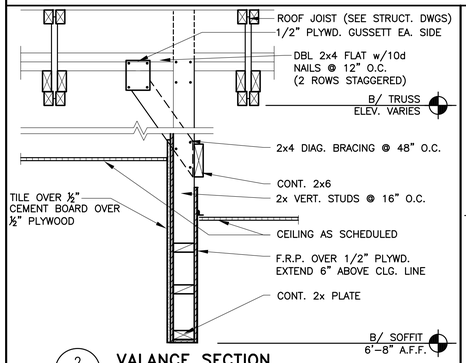

2 A1.2 **VALANCE SECTION**
1"=1'-0"

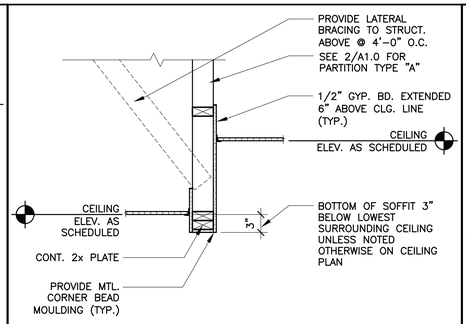

3 A1.2 **CEILING TRANSITION w/ SOFFIT**
1"=1'-0"

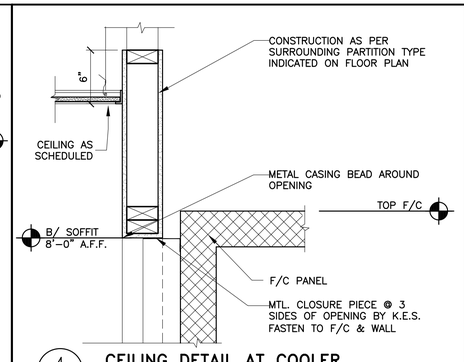

4 A1.2 **CEILING DETAIL AT COOLER**
1 1/2"=1'-0"

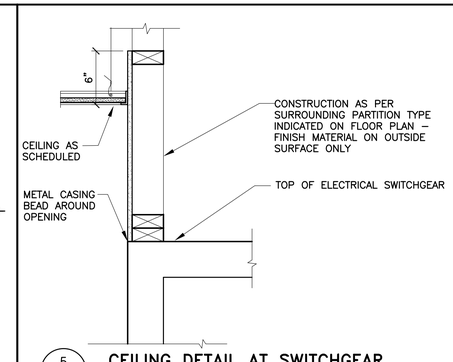

5 A1.2 **CEILING DETAIL AT SWITCHGEAR**
1 1/2"=1'-0"

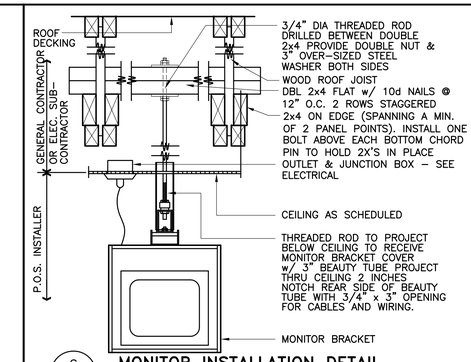

6 A1.2 **MONITOR INSTALLATION DETAIL**
N.T.S.

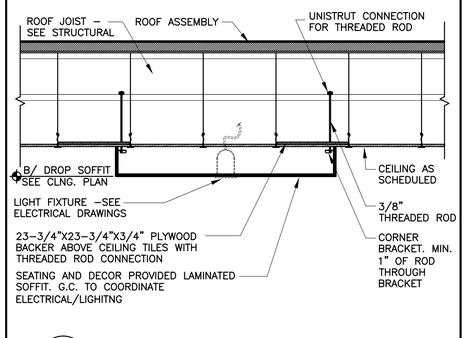

7 A1.2 **CEILING TRANSITION w/ SOFFIT**
1/2"=1'-0" COORDINATE w/ DECOR

8 A1.2 **DETAIL NOT USED**
–

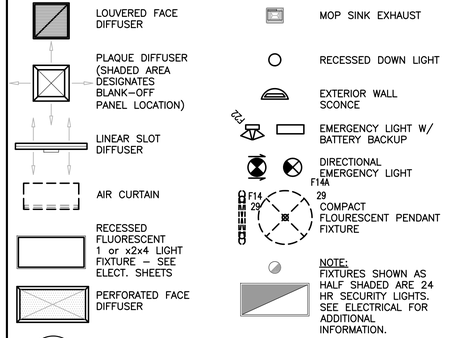

9 A1.2 **SYMBOL LEGEND**
NOT TO SCALE

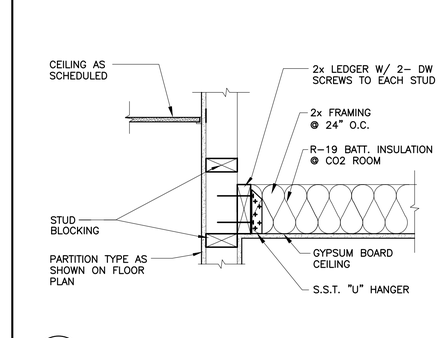

10 A1.2 **GYP BD CEILING DETAIL**
1 1/2"=1'-0" A0610WB1

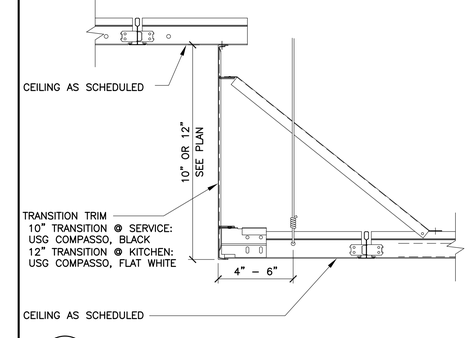

11 A1.2 **ACOUSTIC CEILING TRANSITION**
N.T.S. COORDINATE w/ DECOR

REV	DATE	DESCRIPTION	BY
.	.	.	.
.	.	.	.
B	12/03/20	SERVICE AREA OPTIMIZATION	DJA
.	11/13/20	USRD SAD SET REVIEW	DJA
A	05/05/20	CIVIL & PLAN REVIEW COMMENTS	DJA
.	01/23/20	PERMIT SET	DJA
.	01/13/20	USRD PROGRESS SET REVIEW	DJA

I hereby certify that this plan, specification or report was prepared by me or under my direct supervision and that I am a duly registered ARCHITECT under the laws of the State of Kansas.

Signature
12/03/20
Date
Registration Number

PREPARED BY:
reprise DESIGN
Architecture, Inc.
ARCHITECTURE & PLANNING
12400 PORTLAND AVENUE SOUTH, SUITE 100
BURNSVILLE, MN 55337
EMAIL: DATA@REPRISEDESIGN.COM
PHONE: (952) 252-4042
FAX: (952) 252-4043

PREPARED FOR:
McDonald's USA, LLC

©2020 McDonald's USA, LLC
These drawings and specifications are the confidential and proprietary property of McDonald's USA, LLC and shall not be copied or reproduced without written authorization. The contract documents were prepared for use on this specific site in connection with a McDonald's restaurant project. Any reuse on a different site or at a later time. Use of these drawings for reference, or example, on another project requires the services of a McDonald's licensed architect and shall be limited to the contract documents for reuse on another project is not authorized.

DRAWN BY DJA
STD ISSUE DATE 2019_11
REVIEWED BY KD
DATE ISSUED 01/23/20
RQ#19175

TITLE
2019 STANDARD BUILDING – BB20
4597F10-WOOD/WOOD

DESCRIPTION	FINISH
WOOD BEARING WALLS W/FIBER CEMENT SIDING & CI	
WOOD ROOF TRUSS FRAMING	
FIBER CEMENT PANEL/BATTEN/ALPOLIC PANEL/BRICK EXT.	

SITE ID 015-0071
SITE ADDRESS 605 SOUTH 7TH STREET, KANSAS CITY, KS

SHEET NO.
015-0071.00.B
A1.2
REFLECTED CLG. PLAN

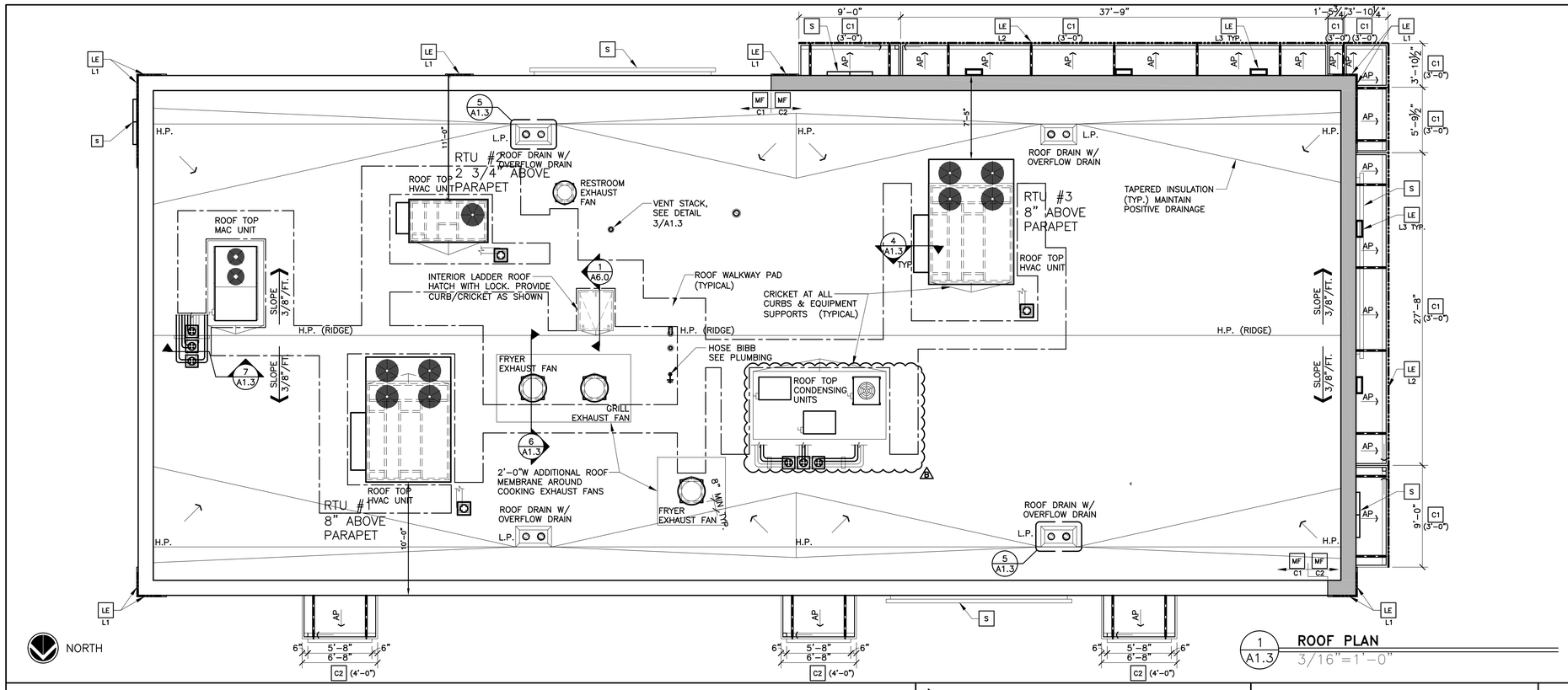

1 A1.3 ROOF PLAN
3/16"=1'-0"

LEGEND

L.P.	LOW POINT
H.P.	HIGH POINT
←	DIRECTION OF DRAINAGE
AP	TRELLIS SYSTEM WITH ALUMINUM INFILL PANELS. SLOPE TO EDGE @1/4"PER FT.

KEY NOTES

- C1 ALUMINUM CANOPY SYSTEM W/ FASCIA (COLOR: SEE ELEVATIONS)
- C2 ALUMINUM CANOPY SYSTEM (COLOR: SEE ELEVATIONS)
- LE ACCENT LIGHTING – SEE ELEVATIONS & ELECTRICAL
  - L1 LED LIGHT:
    - L1 = SLIM LED (DOWN ONLY)
    - L2 = INTEGRAL CANOPY FIXTURE
    - L3 = UP ONLY FLOOD FIXTURE
- MF METAL FASCIA
  - C1 COLOR:
    - C1 = SEE ELEVATIONS FOR COLOR
    - C2 = SEE ELEVATIONS FOR COLOR
- S McDONALD'S SIGNAGE BY OTHERS UNDER SEPARATE PERMIT (SEE ELEVATIONS)

ROOFING NOTES

1. SINGLE-PLY ROOFING SYSTEM WITH BASE FLASHING SHEET EXTENDING UP PARAPET AND TERMINATED UNDER COPING HOT WELDED TO SEALING STRIP SECURED TO WOOD BLOCKING
2. INSTALLATION OF ROOFING SHALL BE IN ACCORDANCE WITH MANUFACTURER'S SPECIFICATIONS AND PER DETAIL 2 OF THIS SHEET.
3. PROVIDE PREFABRICATED METAL CURBS. COORDINATE SIZE, LOCATION AND INSTALLATION REQUIREMENTS W/ M, E, P & S SHEETS. PROVIDE SHIMS TO LEVEL CURB AREAS WHERE ROOF DECK IS PITCHED.
4. FOR EXACT LOCATION OF EXHAUST FANS, HVAC UNITS, AND ROOF HATCH. REFER TO STRUCTURAL DRAWINGS.
5. CRICKETS MUST BE INSTALLED AT ALL ROOF CURBS & EQUIPMENT PLATFORMS BY GENERAL CONTRACTOR.

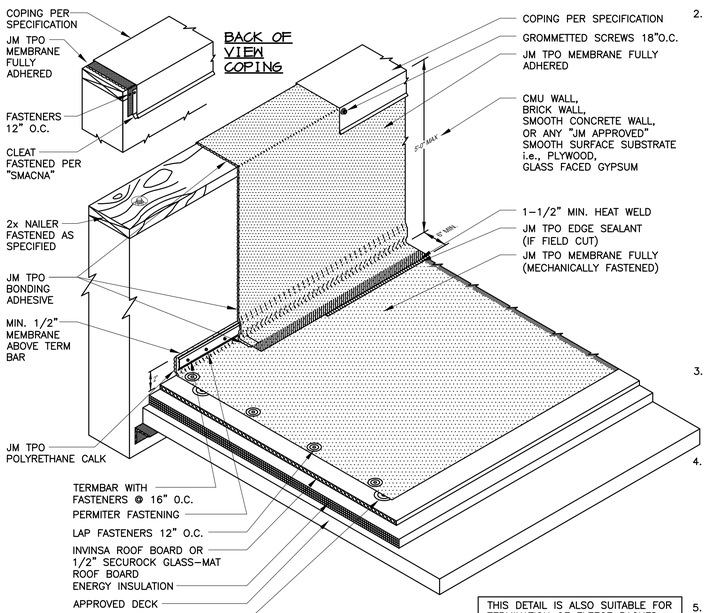

2 A1.3 ROOFING SYSTEM
N.T.S.

THIS DETAIL IS ALSO SUITABLE FOR TERMINATION OF FLEECE BACKED MEMBRANES. NON FLEECE BACK MEMBRANE IS REQUIRED FOR WALL FLASHINGS.

ROOFING SYSTEM

1. MANUFACTURERS AND PRODUCTS:
   - A REFER TO JOHNS MANVILLE WEBSITE (www.jm.com) FOR MOST UP-TO-DATE INFORMATION.
     JM-TPO
     NO SUBSTITUTIONS ALLOWED
2. SPECIFIED ROOFING SYSTEMS (AS SHOWN):
   HEAT-WELDABLE SINGLE-PLY 60 MIL TPO ROOFING SYSTEM, INSTALLED OVER RIGID INSULATION ON WOOD ROOF DECK HAVING A SLOPE OF 3/8"/FT. MATERIALS SHALL BE AS FOLLOWS:
   - A. TPO ROOFING SYSTEM AS MANUFACTURED BY MANUFACTOR LISTED ABOVE TO COMPLY WITH ASTM E 108 OR UL 790, ASTM D-6878, AND FMG I-90 FOR WIND UPLIFT.
   - B. FASTENERS: METAL FASTENERS AND PLATES AS PER MANUFACTURER.
   - C. ACCESSORIES: PRE-FABRICATED CURBS, FLASHING, CORNERS, TERMINATION BARS, PIPE FLASHING, VENT FLASHING ETC. AS PER MANUFACTURER.
   - D. PLEASE SEE SINGLE PLY FLASHING SPECIFICATIONS FOR A FULL DESCRIPTION OF INSTALLATION INSTRUCTIONS AND REQUIREMENTS WHICH ARE CONSIDERED A PART OF THIS DETAIL.
   - E. ANY CARPENTRY OR METAL WORK SHOULD BE DESIGNED AND CONSTRUCTED IN ACCORDANCE WITH LOCAL CODE REQUIREMENTS AND/OR PROJECT SPECIFICATIONS. THESE COMPONENTS SHOULD BE REVIEWED AND APPROVED BY A LICENSED DESIGN PROFESSIONAL. CONTACT JM TECHNICAL FOR METAL OPTIONS TO BE INCLUDED WITHIN THE JM NDL GUARANTEE.
   - F. JM TPO EDGE SEALANT IS REQUIRED ON ALL CUT OR NON-ENCAPSULATED EDGES OF REINFORCED MEMBRANE. THIS INCLUDES FACTORY CUT MEMBRANE (SEE DETAIL T-MS-01).
3. WALKWAYS:
   - A. 30" WIDE WALKWAY ROLL, HOT AIR WELDED TO MEMBRANE.
   - B. PROVIDE WALKWAY FROM ROOF LADDER EXIT TO ALL ROOF TOP EQUIPMENT AS PER ROOF PLAN ABOVE.
   - C. INSTALL WALKWAY ACCORDING TO WALKWAY PAD MANUFACTURER'S WRITTEN INSTRUCTION.
4. RIGID INSULATION:
   PROVIDE REQUIRED LAYERS OF POLYISOCYANURATE INSULATION W/ 1/2" "DENSDECK" COVER BOARD TO MEET A MINIMUM CONTINUOUS R-30 VALUE – THICKNESS AS REQUIRED. PROVIDE POSITIVE SLOPE TO ALL ROOF DRAINS. SEE ROOF PLAN. PROVIDE TOP LAYER PROTECTION MATERIAL AS PER MANUFACTURERS RECOMMENDATIONS. BOTTOM LAYER OF INSULATION TO HAVE INTEGRAL THERMAL BARRIER OR APPROVED ROOFING MANUFACTURER'S THERMAL UNDERLAYMENT SHEET. ASSEMBLY SHALL COMPLY WITH UL 1256 OR FMG 4450 AND ASTM C 1289, TYPE I OR II.
5. TAPERED INSULATION:
   PROVIDE TAPERED INSULATION AS REQUIRED FOR POSITIVE DRAINAGE TO ROOF DRAINS AS INDICATED PER ROOF PLAN ABOVE. ¼" PER FOOT MIN. REQUIRED.
6. EXHAUST FANS:
   PROVIDE ADDITIONAL LAYER OF ROOF MEMBRANE AROUND EXHAUST FANS AS INDICATED PER ROOF PLAN ABOVE.

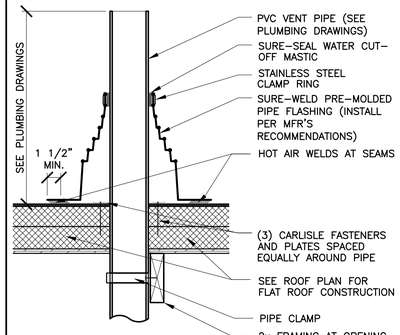

3 A1.3 TYPICAL VENT PENETRATION
1 1/2"=1'-0"

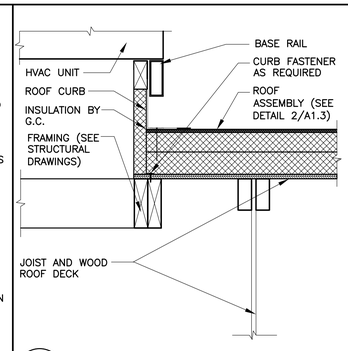

4 A1.3 HVAC UNIT ROOF CURB DETAIL
1 1/2"=1'-0"

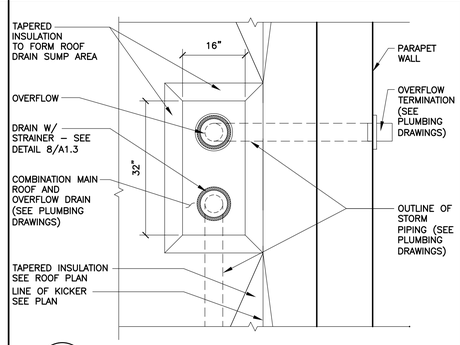

5 A1.3 ROOF DRAIN DETAIL
3/4"=1'-0"

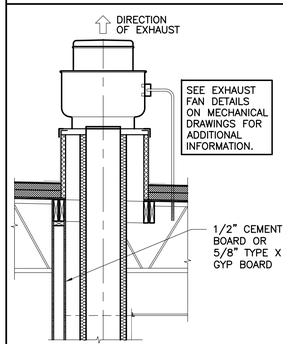

6 A1.3 DETAIL @ EXHAUST FAN
1/2"=1'-0"

NOTE:
THIS DETAIL ILLUSTRATES THE METHOD TO ELIMINATING PITCH POCKETS AND THE METHOD OF GROUPING PIPING THAT MUST PENETRATE THE ROOF.

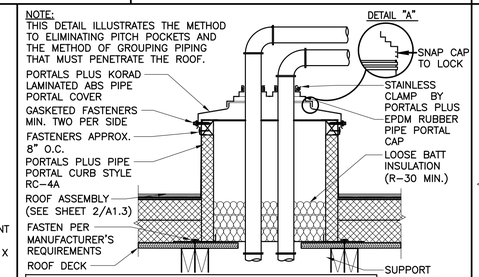

PORTALS PLUS IS A SUPPLIER OF PREFABRICATED ROOF ACCESSORIES AND DOES NOT ASSUME RESPONSIBILITY FOR ERRORS IN DESIGN, ENGINEERING OR INSTALLATION. THE ROOFING SYSTEM MANUFACTURER'S INSTALLATION REQUIREMENTS MAY SUPERSEDE THESE DETAILS FOR WARRANTED ROOF SYSTEMS. SEE MECHANICAL DRAWINGS FOR ADDITIONAL INFORMATION

7 A1.3 PIPE PORTAL DETAIL
1 1/2"=1'-0"

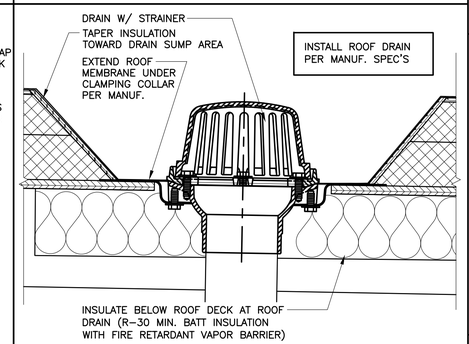

8 A1.3 SECTION @ ROOF DRAIN
3"=1'-0"

REV	DATE	DESCRIPTION	BY
-	-	-	-
-	-	-	-
B	12/03/20	SERVICE AREA OPTIMIZATION	DJA
-	11/13/20	USRD SAD SET REVIEW	DJA
A	05/05/20	CIVIL & PLAN REVIEW COMMENTS	DJA
-	01/23/20	PERMIT SET	DJA
-	01/13/20	USRD PROGRESS SET REVIEW	DJA

I hereby certify that this plan, specification or report was prepared by me or under my direct supervision and that I am a duly registered ARCHITECT under the laws of the State of Kansas.

Signature
12/03/20
Date
Registration Number

PREPARED BY:
reprise DESIGN
Architecture, INC.
ARCHITECTURE & PLANNING
12400 PORTLAND AVENUE SOUTH, SUITE 100
BURNSVILLE, MN. 55337
EMAIL: DATA@REPRISEDESIGN.COM
PHONE: (952) 252-4042
FAX: (952) 252-4043

PREPARED FOR:
McDonald's USA, LLC

©2020 McDonald's USA, LLC
These drawings and specifications are the confidential and proprietary property of McDonald's USA, LLC and shall not be copied or reproduced without written authorization. The contract documents were prepared for use on this specific site. Use on a different site or at a later time. Use of these drawings for reference or example on another project requires the services of a licensed design professional to review and modify the contract documents for reuse on another project is not authorized.

DRAWN BY: DJA
STD ISSUE DATE: 2019_11
REVIEWED BY: KD
DATE ISSUED: 01/23/20
RD#19175

TITLE: 2019 STANDARD BUILDING – BB20
4597F10-WOOD/WOOD
DESCRIPTION: WOOD BEARING WALLS W/FIBER CEMENT SIDING & CI WOOD ROOF TRUSS FRAMING FIBER CEMENT PANEL/BATTEN/ALPOLIC PANEL/BRICK EXT. FINISH
SITE ID: 015-0071
SITE ADDRESS: 605 SOUTH 7TH STREET, KANSAS CITY, KS

SHEET NO. 015-0071.00.B
A1.3
ROOF PLAN

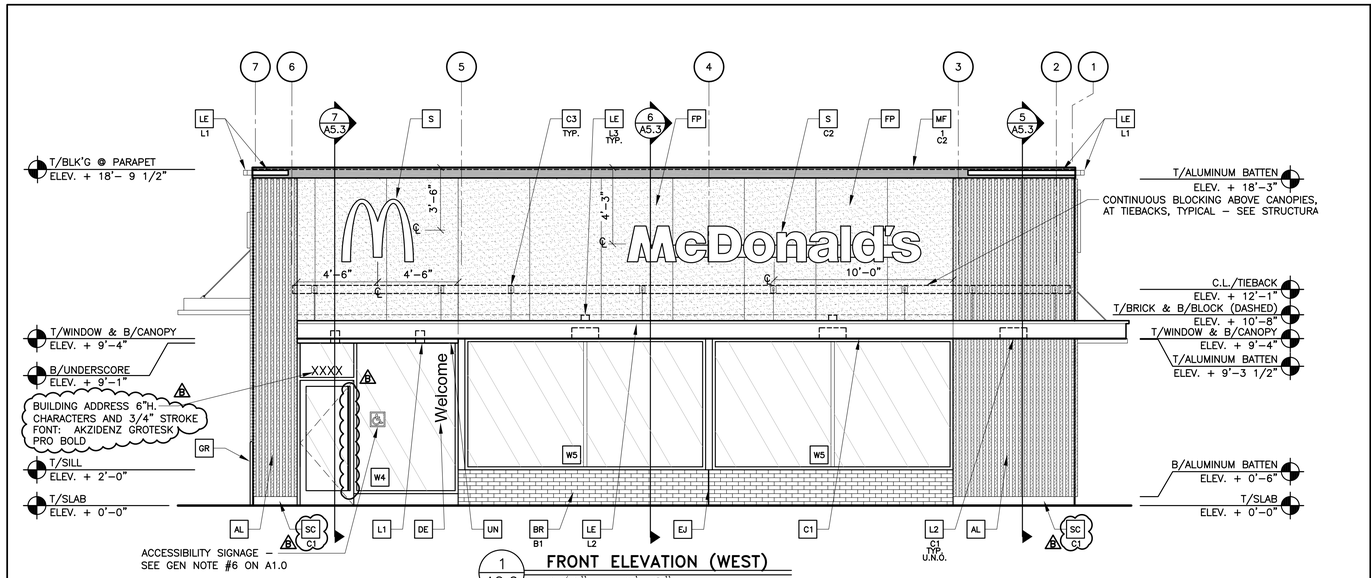

1 A2.0 FRONT ELEVATION (WEST)
1/4" = 1'–0"

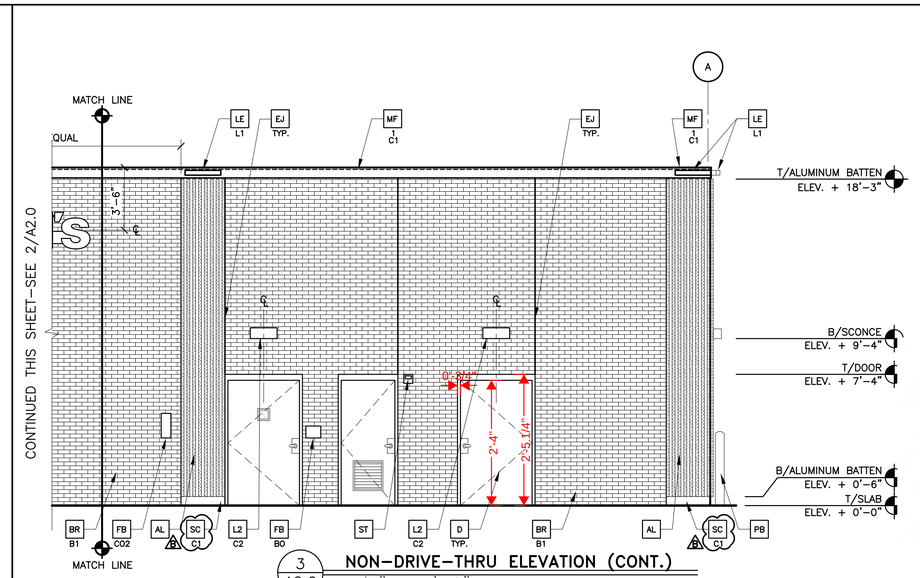

3 A2.0 NON–DRIVE–THRU ELEVATION (CONT.)
1/4" = 1'–0"

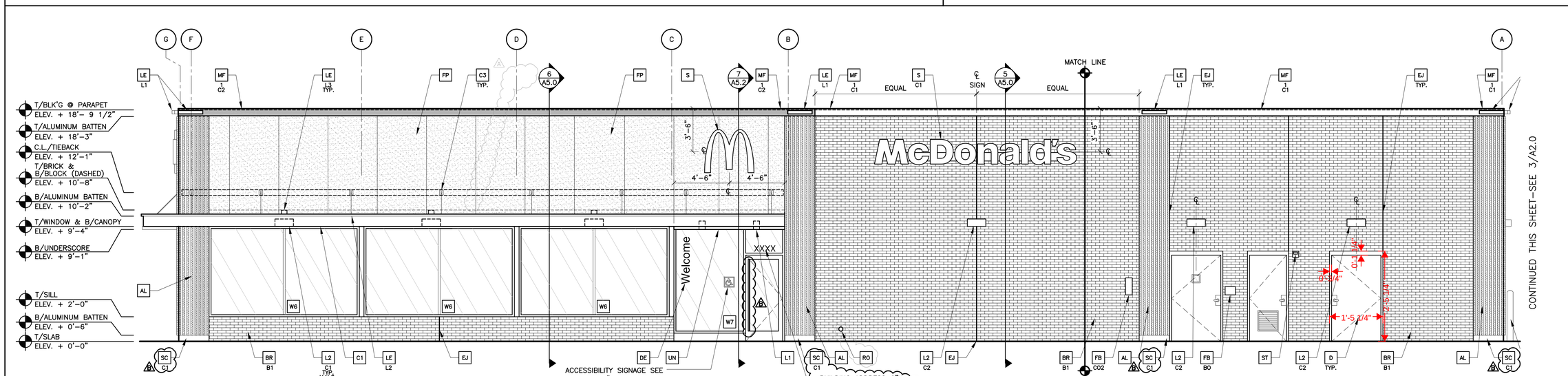

2 A2.0 NON–DRIVE–THRU ELEVATION (SOUTH)
1/4" = 1'–0"

KEY NOTES:

AL — ALUMINUM BATTEN SYSTEM
SIZE: 2"X2" PROFILE
COLOR: WOOD GRAIN, BACKRAIL UNFINISHED, ENDCAP PAINTED TO MATCH SUBSTRATE
SUBSTRATE: 1/2" EXTERIOR HIGH DENSITY OVERLAY (HDO) PLYWOOD, BB, GROUP 1, HDO BOTH FACES, APA TRADEMARKED. COURSE GRIT SAND SURFACES PRIOR TO PRIMING. PRIME AND PAINT BOTH SIDES AND ALL EDGES PRIOR TO INSTALLATION. SUBSTRATE COLOR: "IRON ORE" SW7069 BY SHERWIN WILLIAMS (SEE 16/A4.1 FOR ADDITIONAL INFORMATION)

AP — ALPOLIC METAL PANEL (COLOR: RAL 7022)

BR — MODULAR FACE BRICK
B1 — COLOR:
B1 = "SLATE GRAY" SMOOTH BY HEBRON BRICK COMPANY

C1 — ALUMINUM CANOPY SYSTEM W/FASCIA
COLOR: WHITE

C2 — ALUMINUM CANOPY SYSTEM
COLOR: RAL 7022

C3 — ALUMINUM CANOPY TIEBACK
COLOR: RAL 7022
GC TO PROVIDE CONTINUOUS BLOCKING ON WALL BEHIND TIEBACKS, WHEN TIEBACKS ARE INSTALLED ON METAL PANELING. SEE DETAIL 3/A5.0

D — HOLLOW METAL DOOR
PAINT: "GAUNTLET GREY" SW7019 BY SHERWIN WILLIAMS

EJ — EXPANSION JOINT, SEE DETAIL 7/A4.1

DE — DECAL BY GRAPHICS SUPPLIER
SURFACE APPLIED, FIELD INSTALLED, PRE CUT, PRE SPACED.
SUPPLIERS:
VOMELA (865) 330–7337, ann.bowen@vomela.com
GFX INTERNATIONAL (847) 543–4600,
mcdonaldsdecor@gfxi.com

FB — FILL BOX
CO2 — CO2 = BULK CO2 FILL BOX (EQPM SCHEDULE ITEM 49.00)
BO = BULK OIL FILL BOX (EQPM SCHEDULE ITEM 700.18)

FP — FIBER CEMENT PANELS: BY HARDIEPANEL VERTICAL SIDING, SMOOTH, 48" WIDTH, HZ5, PRE–PRIMED,
COLOR: "IRON ORE" SW 7069 BY SHERWIN WILLIAMS

GR — GUARD RAIL –SEE SITE PLAN FOR EXACT LOCATION AND LENGTHSEE 4/A2.1 FOR DETAILS
PAINT: "IRON ORE" SW 7069 BY SHERWIN WILLIAMS

L1 — RECESSED DOWN LIGHT FIXTURE – SEE ELECTRICAL
COLOR: GOLD

L2 — RADIAL SCONCE LIGHT FIXTURE – SEE ELECTRICAL
C1 — COLOR:
C1= WHITE
C2= PLATINUM SILVER

LE — ACCENT LIGHTING – SEE ELECTRICAL
L1 — LED LIGHT:
L1 = SLIM LED (DOWN ONLY)
L2 = INTEGRAL CANOPY FIXTURE
L3 = UP ONLY FLOOD FIXTURE

PB — PIPE BOLLARD – PAINTED YELLOW

PT — (RMHC) COIN COLLECTOR
UNIT: APERTURE WPT, #DTA2013
CALL 1–877–766–7642 TO ORDER

MF — METAL FASCIA
C1 — TYPE:
1 = PRE–FAB ANCHOR–TITE FASCIA
2 = NOT USED
3 = NOT USED
COLOR:
C1= WEATHERED ZINC
C2= RAL 7022

RO — ROOF DRAIN OVERFLOW PIPE PAINT TO MATCH SURROUNDING MATERIAL

S — McDONALD'S SIGNAGE BY OTHERS – UNDER SEPARATE PERMIT.
C1 — COLOR:
C1= WEATHERED ZINC RACEWAY
C2= RAL 7022 RACEWAY

SC — STUCCO (@ BASE OF BATTEN SYSTEM)
C1 — PAINT "IRON ORE" SW7069 BY SHERWIN WILLIAMS

ST — CO2 STROBE/ALARM. SEE MECHANICAL DRAWINGS FOR SPECIFICATION.

UN — METAL UNDERSCORE
COLOR: GOLD

W1 — EXTERIOR WINDOW ASSEMBLY – TEMPERED GLASS
COLOR: DARK BRONZE – SEE ASSEMBLY NOTES ON 4/A5.0 & FRAME TYPES ON SHEET A6.0

W2 — DRIVE–THRU WINDOW BY READY ACCESS
MODEL: 600 SERIES, 36" SERVICE HEIGHT WITH TRANSOM, MANUAL OPEN; ELECTRONIC RELEASE
XX — COLOR: DEEP BRONZE
SLIDE DIRECTION: RL = RIGHT TO LEFT
LR = LEFT TO RIGHT

REV	DATE	DESCRIPTION	BY
.	.	.	.
.	.	.	.
B	12/03/20	SERVICE AREA OPTIMIZATION	DIA
.	11/13/20	USRD SAO SET REVIEW	DIA
A	05/05/20	CIVIL & PLAN REVIEW COMMENTS	DIA
.	01/23/20	PERMIT SET	DIA
.	01/13/20	USRD PROGRESS SET REVIEW	DIA

I hereby certify that this plan, specification or report was prepared by me or under my direct supervision and that I am a duly registered ARCHITECT under the laws of the State of Kansas.

Signature
12/03/20
Date
Registration Number

PREPARED BY:
reprise DESIGN
Architecture, Inc.
ARCHITECTURE & PLANNING
12400 PORTLAND AVENUE SOUTH, SUITE 100
BURNSVILLE, MN 55337
EMAIL: DATA@REPRISEDESIGN.COM
PHONE: (952) 252–4042
FAX: (952) 252–4043

PREPARED FOR:
McDonald's USA, LLC

©2020 McDonald's USA, LLC
These drawings and specifications are the confidential and proprietary property of McDonald's USA, LLC and shall not be copied or reproduced without written authorization. The contract documents were prepared for use on this specific site in connection with the development of McDonald's USA, LLC and shall not be used on a different site or at a later time. Use of these drawings for reference or example on another project requires the services of an architect or engineer qualified in the jurisdiction of the project. The contract documents for reuse on another project is not authorized.

DRAWN BY	REVIEWED BY	DATE ISSUED
DIA	KD	01/23/20
STD ISSUE DATE 2019_11		

TITLE: 2019 STANDARD BUILDING – BB20
4597F10–WOOD/WOOD

DESCRIPTION
WOOD BEARING WALLS W/FIBER CEMENT SIDING & CI
WOOD ROOF TRUSS FRAMING
FIBER CEMENT PANEL/BATTEN/ALPOLIC PANEL/BRICK EXT. FINISH

SITE ID: 015–0071
SITE ADDRESS: 605 SOUTH 7TH STREET, KANSAS CITY, KS
RQ#19175

SHEET NO. 015–0071.00.B
A2.0
ELEVATIONS

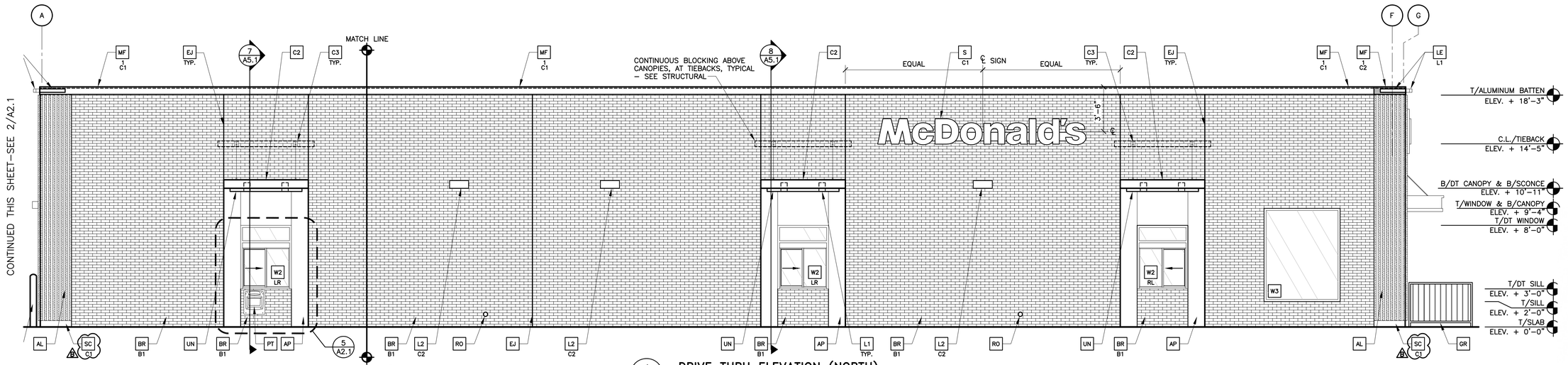

1 A2.1 DRIVE THRU ELEVATION (NORTH)
1/4" = 1'–0"

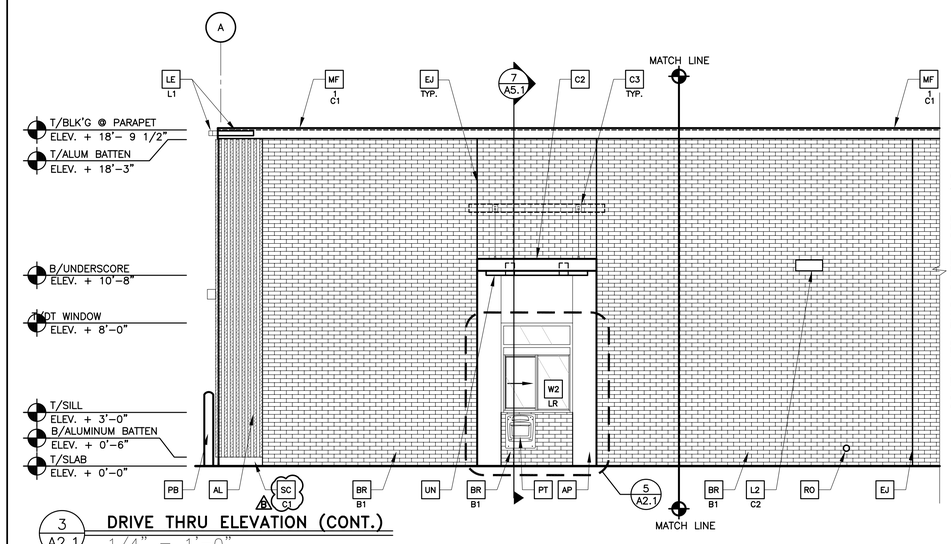

3 A2.1 DRIVE THRU ELEVATION (CONT.)
1/4" = 1'–0"

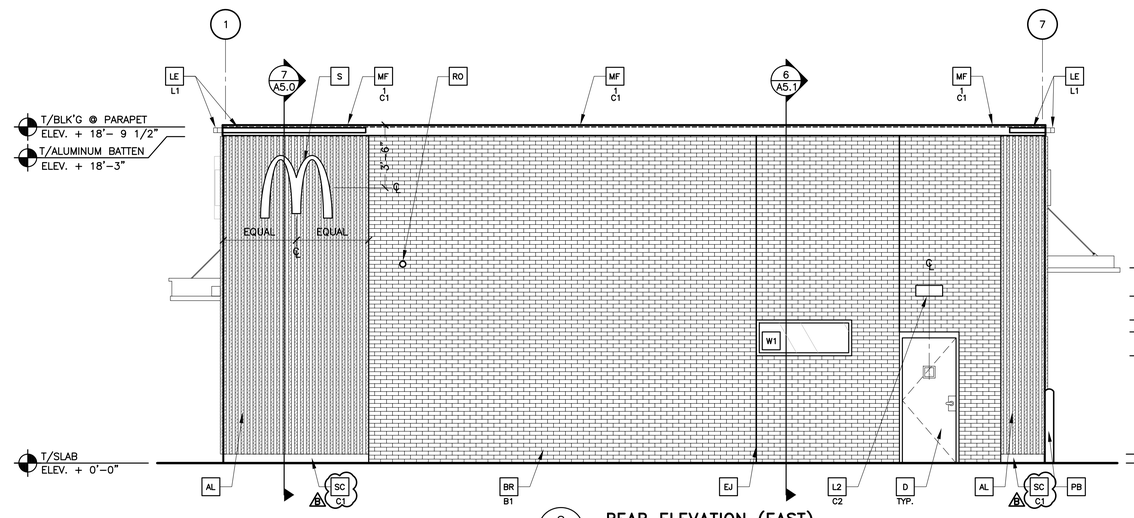

2 A2.1 REAR ELEVATION (EAST)
1/4" = 1'–0"

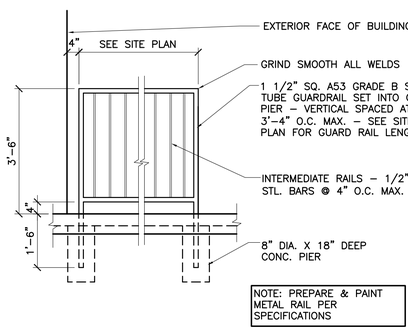

4 A2.1 GUARD RAIL DETAIL
1/2"=1'–0"

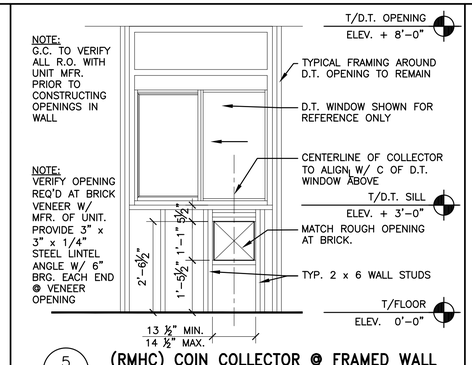

5 A2.1 (RMHC) COIN COLLECTOR @ FRAMED WALL
1/2" = 1'–0" INTERIOR ELEVATON

6 A2.1 DETAIL NOT USED
–

KEY NOTES:

AL — ALUMINUM BATTEN SYSTEM (B)
SIZE: 2"X2" PROFILE
COLOR: WOOD GRAIN, BACKRAIL UNFINISHED, ENDCAP PAINTED TO MATCH SUBSTRATE
SUBSTRATE: 1/2" EXTERIOR HIGH DENSITY OVERLAY (HDO) PLYWOOD, BB, GROUP 1, HDO BOTH FACES, APA TRADEMARKED. COURSE GRIT SAND SURFACES PRIOR TO PRIMING. PRIME AND PAINT BOTH SIDES AND ALL EDGES PRIOR TO INSTALLATION.
SUBSTRATE COLOR: "IRON ORE" SW7069 BY SHERWIN WILLIAMS
(SEE 16/A4.1 FOR ADDITIONAL INFORMATION)

AP — ALPOLIC METAL PANEL (COLOR: RAL 7022)

BR — MODULAR FACE BRICK
B1— COLOR:
B1 = "SLATE GRAY" SMOOTH BY HEBRON BRICK COMPANY

C1 — ALUMINUM CANOPY SYSTEM W/FASCIA
COLOR: WHITE

C2 — ALUMINUM CANOPY SYSTEM
COLOR: RAL 7022

C3 — ALUMINUM CANOPY TIEBACK
COLOR: RAL 7022
GC TO PROVIDE CONTINUOUS BLOCKING ON WALL BEHIND TIEBACKS, WHEN TIEBACKS ARE INSTALLED ON METAL PANELING. SEE DETAIL 3/A5.0

D — HOLLOW METAL DOOR
PAINT: "GAUNTLET GREY" SW7019 BY SHERWIN WILLIAMS

EJ — EXPANSION JOINT, SEE DETAIL 7/A4.1

DE — DECAL BY GRAPHICS SUPPLIER
SURFACE APPLIED, FIELD INSTALLED, PRE CUT, PRE SPACED.
SUPPLIERS:
VOMELA (865) 330–7337, ann.bowen@vomela.com
GFX INTERNATIONAL (847) 543–4600, mcdonaldsdecor@gfxi.com

FB — FILL BOX
CO2— CO2 = BULK CO2 FILL BOX (EQPM SCHEDULE ITEM 49.00)
BO = BULK OIL FILL BOX (EQPM SCHEDULE ITEM 700.18)

FP — FIBER CEMENT PANELS: BY HARDIEPANEL VERTICAL SIDING, SMOOTH, 48" WIDTH, HZ5, PRE–PRIMED,
COLOR: "IRON ORE" SW 7069 BY SHERWIN WILLIAMS

GR — GUARD RAIL –SEE SITE PLAN FOR EXACT LOCATION AND LENGTHSEE 4/A2.1 FOR DETAILS
PAINT: "IRON ORE" SW 7069 BY SHERWIN WILLIAMS

L1 — RECESSED DOWN LIGHT FIXTURE – SEE ELECTRICAL
COLOR: GOLD

L2 — RADIAL SCONCE LIGHT FIXTURE – SEE ELECTRICAL
C1— COLOR:
C1= WHITE
C2= PLATINUM SILVER

LE — ACCENT LIGHTING – SEE ELECTRICAL
L1—LED LIGHT:
L1 = SLIM LED (DOWN ONLY)
L2 = INTEGRAL CANOPY FIXTURE
L3 = UP ONLY FLOOD FIXTURE

PB — PIPE BOLLARD – PAINTED YELLOW

PT — (RMHC) COIN COLLECTOR
UNIT: APERTURE WPT, #DTA2013
CALL 1–877–766–7642 TO ORDER

MF — METAL FASCIA
C1— TYPE:
1 = PRE–FAB ANCHOR–TITE FASCIA
2 = NOT USED
3 = NOT USED
COLOR:
C1= WEATHERED ZINC
C2= RAL 7022

RO — ROOF DRAIN OVERFLOW PIPE PAINT TO MATCH SURROUNDING MATERIAL

S — McDONALD'S SIGNAGE BY OTHERS – UNDER SEPARATE PERMIT.
C1— COLOR:
C1= WEATHERED ZINC RACEWAY
C2= RAL 7022 RACEWAY

(B) SC — STUCCO (@ BASE OF BATTEN SYSTEM)
C1— PAINT "IRON ORE" SW7069 BY SHERWIN WILLIAMS

ST — CO2 STROBE/ALARM. SEE MECHANICAL DRAWINGS FOR SPECIFICATION.

UN — METAL UNDERSCORE
COLOR: GOLD

(B) W1 — EXTERIOR WINDOW ASSEMBLY – TEMPERED GLASS
COLOR: DARK BRONZE – SEE ASSEMBLY NOTES ON 6/A5.0 & FRAME TYPES ON SHEET A6.0

W2 — DRIVE–THRU WINDOW BY READY ACCESS
MODEL: 600 SERIES, 36" SERVICE HEIGHT WITH TRANSOM, MANUAL OPEN; ELECTRONIC RELEASE
XX— COLOR: DEEP BRONZE
SLIDE DIRECTION: RL = RIGHT TO LEFT
LR = LEFT TO RIGHT

REV	DATE	DESCRIPTION	BY
.	.	.	.
.	.	.	.
B	12/03/20	SERVICE AREA OPTIMIZATION	DIA
.	11/13/20	USRD SAO SET REVIEW	DIA
A	05/05/20	CIVIL & PLAN REVIEW COMMENTS	DIA
.	01/23/20	PERMIT SET	DIA
.	01/13/20	USRD PROGRESS SET REVIEW	DIA

I hereby certify that this plan, specification or report was prepared by me or under my direct supervision and that I am a duly registered ARCHITECT under the laws of the State of Kansas.

Signature
12/03/20
Date
Registration Number

PREPARED BY:
reprise DESIGN
Architecture, INC.
ARCHITECTURE & PLANNING
12400 PORTLAND AVENUE SOUTH, SUITE 100
BURNSVILLE, MN 55337
EMAIL: DATA@REPRISEDESIGN.COM
PHONE: (952) 252–4042
FAX: (952) 252–4043

PREPARED FOR:
McDonald's USA, LLC

©2020 McDonald's USA, LLC
These drawing and specifications are the confidential and proprietary property of McDonald's USA, LLC and shall not be copied or reproduced without written authorization. The contract documents were prepared for use on this specific site in accordance with McDonald's requirements. Reuse on a different site or at a later time, "Use of these drawings for reference or example on another project requires the services of a qualified architect to review the drawings for conformance to project requirements. Modification to the contract documents for reuse on another project is not authorized.

DRAWN BY DIA
STD ISSUE DATE 2019_11
REVIEWED BY KD
DATE ISSUED 01/23/20
RO#19175

TITLE 2019 STANDARD BUILDING – BB20
4597F10–WOOD/WOOD
DESCRIPTION WOOD BEARING WALLS W/FIBER CEMENT SIDING & CI WOOD ROOF TRUSS FRAMING FIBER CEMENT PANEL/BATTEN/ALPOLIC PANEL/BRICK EXT. FINISH
SITE ID 015–0071
SITE ADDRESS 605 SOUTH 7TH STREET, KANSAS CITY, KS

SHEET NO. 015–0071.00.B
A2.1
ELEVATIONS

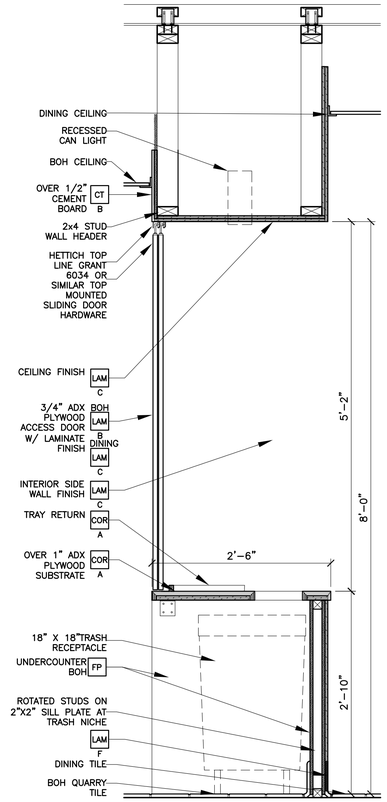

8 A3.0 SECTION DETAIL @ TRASH/AMENITY
1" = 1'-0"

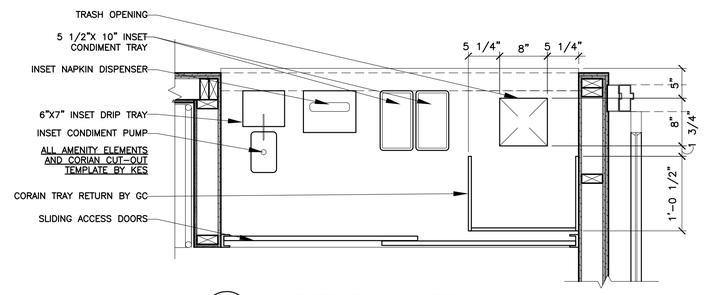

7 A3.0 AMENITY PLAN – TOP
1"= 1'-0"

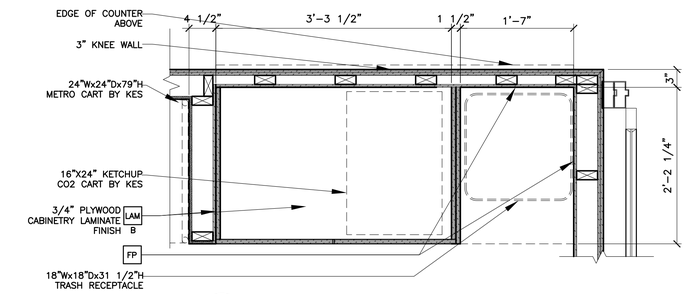

6 A3.0 AMENITY PLAN – BASE
1"= 1'-0"

9 A3.0 NOT USED

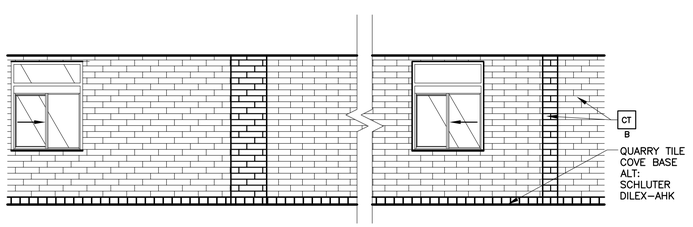

5 A3.0 DRIVE THROUGH ELEVATION
1/4" = 1'-0"

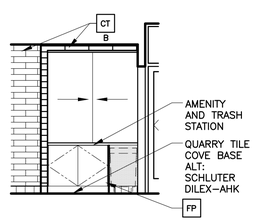

4 A3.0 AMENITY ELEVATION
1/4" = 1'-0"

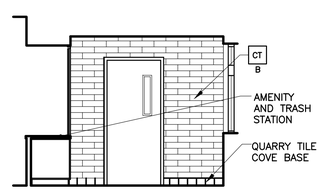

3 A3.0 CREW DOOR ELEVATION
1/4" = 1'-0"

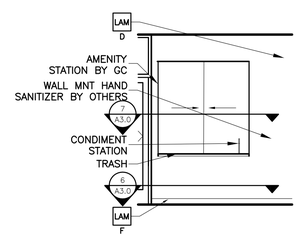

2 A3.0 DINING ROOM ELEVATION
1/4" = 1'-0"

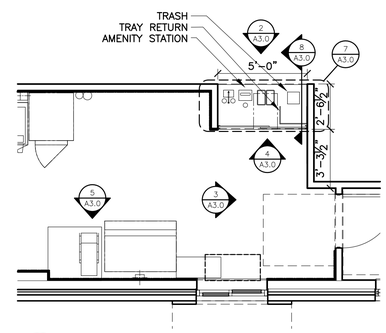

1 A3.0 AMENITY AREA PLAN
1/4"= 1'-0"

KEY NOTES

CG CORNER GUARD: 3/4" ANGLE BY DECOR
X—
COLOR:
A = BLACK

COR CORIAN:
X—
COLOR:
A = CORIAN CAMEO WHITE BY GC
B = CORIAN DEEP TITANIUM BY GC

CT B WALL TILE: CROSSVILLE – COLOR BY NUMBERS
COLOR: INTUITIVE GRAY. SIZE: 4"x12", PATTERN: RUNNING BOND
GROUT: MAPEI 02 PEWTER – JOINT TO BE 3/16" MAX.
USE THIS TILE WHEN HIGH LRV IS REQUIRED
COORDINATE WITH THE McDONALD'S AREA CONSTRUCTION MANAGER

FP FIBERGLASS REINFORCED PLASTIC (FRP) – PANOLAM, GRAY SMOOTH, CLASS C, .075. REFER TO ROOM FINISH SCHEDULE SHEET A6.1 FOR INSTALLATION LOCATIONS. FOR ORDERING, CONTACT KIMBERLY LAWSON Kimberly_Lawson@panolam.com 1-866-925-4377

LAM LAMINATE:
X—
COLOR:
A = IDMB / DIG. MERCH., SMOOTH BLACK PLASTIC LAMINATE BY GC
B = TRASH/ COND., WHITE PLASTIC LAMINATE BY GC
C = TRASH/ COND., LAMITECH GRAPHITE K MATTE FINISH BY GC
D = SEE DECOR DRAWINGS. MFR BY DECOR. PURCHASE AND INSTALL BY GC
E = McDELVIERY UNDERSCORE, LAMITECH GOLDEN
F = BASE BOARD, FORMICA COMPACT LAMINATE MATTE BLACK BY GC

GENERAL NOTES

- ALL WALL LAMINATE PANELING MANUFACTURED BY DECOR PURCHASE AND INSTALL BY GC UNO
- A&E TO VERIFY LOCATION AND QUANTITY OF LIGHTS AND DIFFUSERS AFTER SERVICE AREA WALL ADDITION

REV	DATE	DESCRIPTION	BY
-	-	-	-
-	-	-	-
B	12/03/20	SERVICE AREA OPTIMIZATION	DIA
-	11/13/20	USRD SAO SET REVIEW	DIA
A	05/05/20	CIVIL & PLAN REVIEW COMMENTS	DIA
-	01/23/20	PERMIT SET	DIA
-	01/13/20	USRD PROGRESS SET REVIEW	DIA

I hereby certify that this plan, specification or report was prepared by me or under my direct supervision and that I am a duly registered ARCHITECT under the laws of the State of Kansas.

Signature
12/03/20
Date
Registration Number

PREPARED BY:
reprise DESIGN
Architecture, INC.
ARCHITECTURE & PLANNING
12400 PORTLAND AVENUE SOUTH, SUITE 100
BURNSVILLE, MN. 55337
EMAIL: DATA@REPRISEDESIGN.COM
PHONE: (952) 252-4042
FAX: (952) 252-4043

PREPARED FOR:
McDonald's USA, LLC

©2020 McDonald's USA, LLC

These drawings and specifications are the confidential and proprietary property of McDonald's USA, LLC and shall not be copied or reproduced without written authorization. The contract documents were prepared for use on this specific site in connection with this project and may not be used on a different site or at a later time. Use of these drawings for reference, or example, on another project requires the services of a licensed architect in the project jurisdiction. Any unauthorized use of the contract documents for reuse on another project is not authorized.

DRAWN BY
STD ISSUE DATE 2019_11
REVIEWED BY KD
DATE ISSUED 01/23/20
RQ#19175

TITLE
2019 STANDARD BUILDING – BB20
4597F10-WOOD/WOOD

DESCRIPTION	
WOOD BEARING WALLS W/FIBER CEMENT SIDING & CI	
WOOD ROOF TRUSS FRAMING	
FIBER CEMENT PANEL/BATTEN/ALPOLIC PANEL/BRICK EXT. FINISH	
SITE ID	SITE ADDRESS
015-0071	605 SOUTH 7TH STREET, KANSAS CITY, KS

SHEET NO.
015-0071.00.B
A3.0
AMENITY PLANS & DETAILS

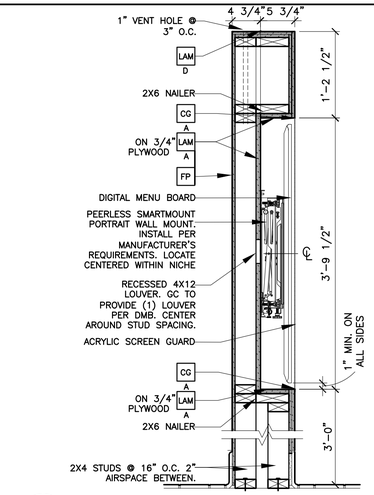

11 A3.1 SECTION @ DIGITAL MERCHANDISER
1" = 1'-0"

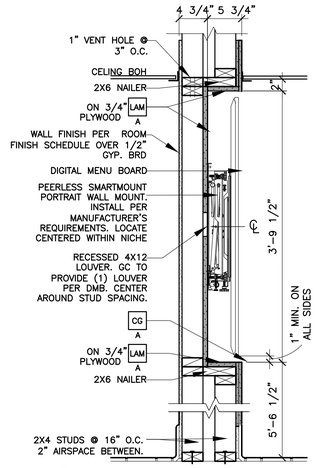

10 A3.1 SECTION @ MENU BOARDS
1" = 1'-0"

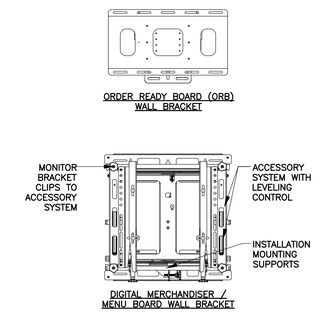

* SECURE TO STUDS OR 3/4" PLYWOOD BACKING
* FOLLOW MANUFACTURER'S INSTALLATION INSTRUCTIONS

9 A3.1 DIGITAL BOARD BRACKET DETAIL
1" = 1'-0"

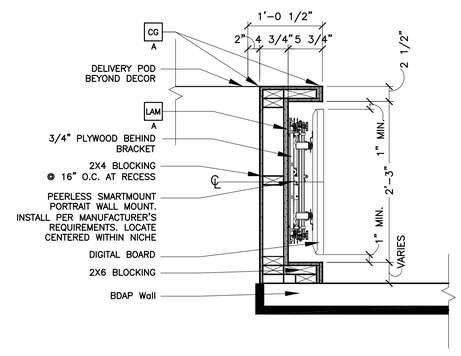

8 A3.1 PLAN DETAIL @ DIGITAL MERCHANDISER
1" = 1'-0"

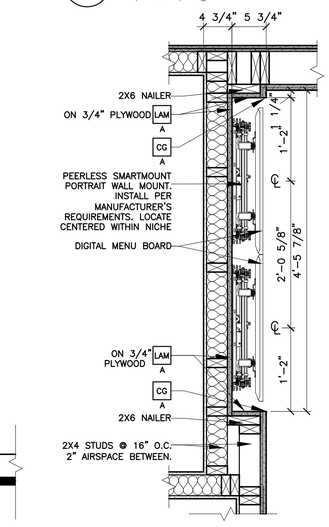

7 A3.1 PLAN DETAIL @ MENU BOARDS
1" = 1'-0"

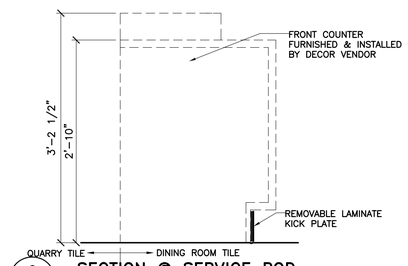

6 A3.1 SECTION @ SERVICE POD
1"=1'-0"

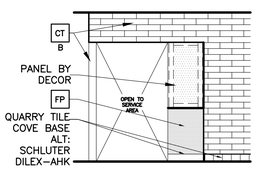

5 A3.1 KITCHEN ELEVATION
1/4" = 1'-0"

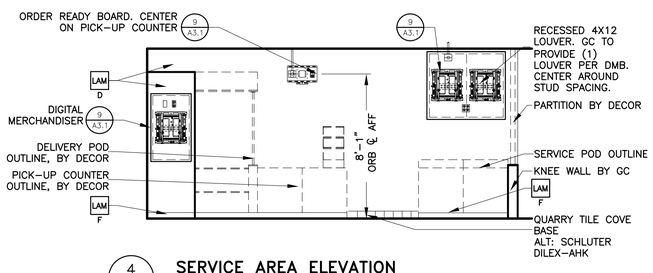

4 A3.1 SERVICE AREA ELEVATION
1/4" = 1'-0"

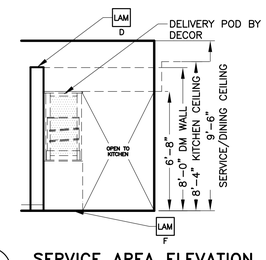

3 A3.1 SERVICE AREA ELEVATION
1/4" = 1'-0"

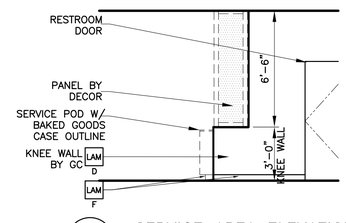

2 A3.1 SERVICE AREA ELEVATION
1/4" = 1'-0"

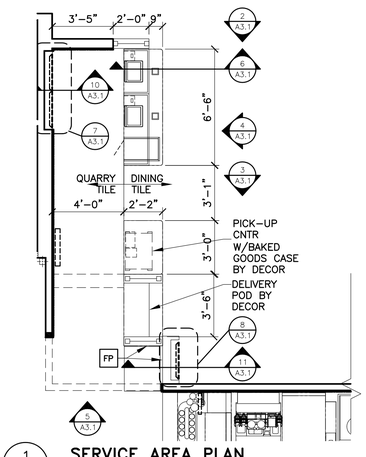

1 A3.1 SERVICE AREA PLAN
1/4" = 1'-0"

KEY NOTES

CG CORNER GUARD: 3/4" ANGLE BY DECOR
X—
COLOR:
A = BLACK

COR CORIAN:
X—
COLOR:
A = CORIAN CAMEO WHITE BY GC
B = CORIAN DEEP TITANIUM BY GC

CT B WALL TILE: CROSSVILLE – COLOR BY NUMBERS
COLOR: INTUITIVE GRAY. SIZE: 4"x12", PATTERN: RUNNING BOND
GROUT: MAPEI 02 PEWTER – JOINT TO BE 1/16" MAX.
USE THIS TILE WHEN HIGH LRV IS REQUIRED
COORDINATE WITH THE McDONALD'S AREA CONSTRUCTION MANAGER

FP FIBERGLASS REINFORCED PLASTIC (FRP) – PANOLAM, GRAY SMOOTH, CLASS C, .075. REFER TO ROOM FINISH SCHEDULE SHEET A6.1 FOR INSTALLATION LOCATIONS. FOR ORDERING, CONTACT KIMBERLY LAWSON Kimberly_Lawson@panolam.com 1-866-925-4377

LAM LAMINATE:
X—
COLOR:
A = IDMB / DIG. MERCH., SMOOTH BLACK PLASTIC LAMINATE BY GC
B = TRASH/ COND., WHITE PLASTIC LAMINATE BY GC
C = TRASH/ COND., LAMITECH GRAPHITE K MATTE FINISH BY GC
D = SEE DECOR DRAWINGS. MFR BY DECOR. PURCHASE AND INSTALL BY GC
E = McDELIVERY UNDERSCORE, LAMITECH GOLDEN
F = BASE BOARD, FORMICA COMPACT LAMINATE MATTE BLACK BY GC

GENERAL NOTES

- ALL WALL LAMINATE PANELING MANUFACTURED BY DECOR PURCHASE AND INSTALL BY GC UNO
- A&E TO VERIFY LOCATION AND QUANTITY OF LIGHTS AND DIFFUSERS AFTER SERVICE AREA WALL ADDITION

REV	DATE	DESCRIPTION	BY
-	-	-	-
-	-	-	-
B	12/03/20	SERVICE AREA OPTIMIZATION	DJA
-	11/13/20	USRD SAO SET REVIEW	DJA
A	05/05/20	CIVIL & PLAN REVIEW COMMENTS	DJA
-	01/23/20	PERMIT SET	DJA
-	01/13/20	USRD PROGRESS SET REVIEW	DJA

I hereby certify that this plan, specification or report was prepared by me or under my direct supervision and that I am a duly registered ARCHITECT under the laws of the State of Kansas.

Signature
12/03/20
Date
BRIAN CHRISTOPHER BOGGS
ARCHITECT
Registration Number

PREPARED BY:
reprise DESIGN
Architecture, INC.
ARCHITECTURE & PLANNING
12400 PORTLAND AVENUE SOUTH, SUITE 100
BURNSVILLE, MN 55337
EMAIL: DATA@REPRISEDESIGN.COM
PHONE: (952) 252-4042
FAX: (952) 252-4043

PREPARED FOR:
McDonald's USA, LLC

©2020 McDonald's USA, LLC
These drawings and specifications are the confidential and proprietary property of McDonald's USA, LLC and shall not be copied or reproduced without written authorization. The contract documents were prepared for use on this specific site in accordance with McDonald's standards. Use of these drawings on a different site or at a later time. Use of these drawings for reference or example on another project requires the services of a licensed design professional to review the drawings for the contract documents for reuse on another project is not authorized.

DRAWN BY
STD ISSUE DATE 2019_11
REVIEWED BY KD
DATE ISSUED 01/23/20
RO#19175

TITLE
2019 STANDARD BUILDING – BB20
4597F10-WOOD/WOOD
DESCRIPTION
WOOD BEARING WALLS W/FIBER CEMENT SIDING & CI
WOOD ROOF TRUSS FRAMING
FIBER CEMENT PANEL/BATTEN/ALPOLIC PANEL/BRICK EXT. FINISH
SITE ID 015-0071
SITE ADDRESS 605 SOUTH 7TH STREET, KANSAS CITY, KS

SHEET NO
015-0071.00 B
A3.1
SERVICE PLAN & DETAILS

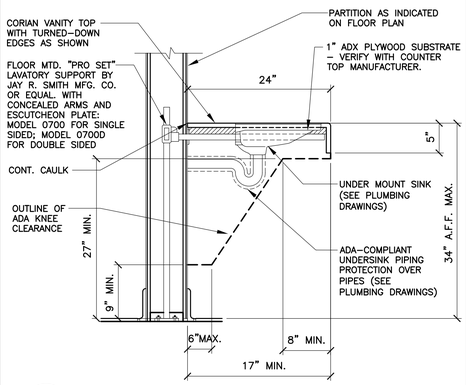

2 A4.0 **SECTION @ LAVATORY**
1"=1'-0"
A1540_A4

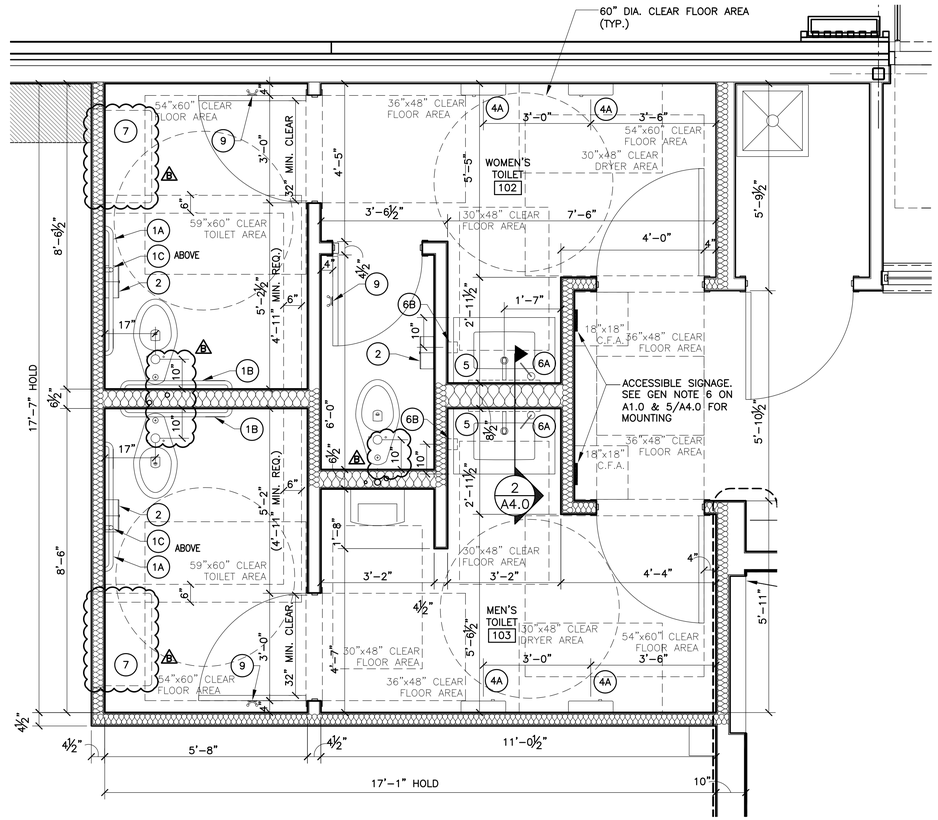

1 A4.0 **ENLARGED RESTROOM PLAN**
1/2" = 1'-0"

NOTES:

1. ALL DIMENSIONS SHOWN ARE TAKEN TO CEMENT BD.
2. SEE 2/A1.0 FOR PARTITION TYPES
3. SEE SHEETS A6.0 & A6.1 FOR DOOR AND FINISH SCHEDULES.
4. SEE 4/A4.0 FOR FIXTURE MOUNTING HEIGHTS
5. DASHED LINES REPRESENTING CLEAR FLOOR SPACE REQUIREMENTS MUST BE MAINTAINED WITHOUT EXCEPTION. IF CONDITIONS PREVENT ANY CLEAR FLOOR SPACE FROM BEING MAINTAINED, CONTACT THE ARCHITECT FOR RESOLUTION.

(X) = RESTROOM ACCESSORY – SEE 3/A4.0

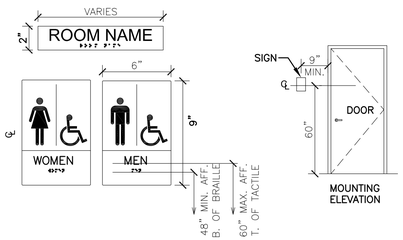

GRAPHICS SHOWN ARE FOR REFERENCE ONLY.

GC TO PROVIDE ADA SIGNAGE PACKAGE AND INSTALL SIGNS AT LOCATIONS AND POSITIONS INDICATED IN PACKAGE OR AS REQUIRED BY LOCAL CODES. SIGNAGE PACKAGE SUPPLIED BY:

FORREST PERMA-SIGN
9292 1ST ST., BOX 588
NEW ROCHELLE, NY 10802
www.forrestpermasigns.com
1-800-214-8765

SIGNAGE NOTES:

1. EACH EXIT DOOR SHALL HAVE A TACTILE SIGN, INCLUDING RAISED LETTERS AND BRAILLE, STATING 'EXIT' AND SHALL COMPLY WITH CHAPTER 7. ALL SIGNAGE SHALL CONFORM WITH ACCESSIBILITY GUIDELINES AND LOCAL GUIDELINES INCLUDING BUT NOT LIMITED TO PROPORTION, COLOR CONTRAST AND RELIEF AND GRADE 2 BRAILLE REQUIREMENTS.
2. WHEN PERMANENT IDENTIFICATION IS PROVIDED FOR ROOMS AND SPACES, RAISED LETTERS SHALL BE PROVIDED AND SHALL BE ACCOMPANIED BY BRAILLE IN CONFORMANCE WITH CHAPTER 7. SIGNS SHALL BE INSTALLED ON THE WALL ADJACENT TO THE LATCH SIDE OF THE DOOR. WHERE THERE IS NO WALL SPACE ON THE LATCH SIDE, INCLUDING AT DOUBLE LEAF DOORS, SIGNS SHALL BE PLACED ON THE NEAREST ADJACENT WALL, PREFERABLY ON THE RIGHT. MOUNTING HEIGHT SHALL BE 60" ABOVE THE FINISHED FLOOR TO THE CENTERLINE OF THE SIGN. MOUNTING LOCATION SHALL BE DETERMINED SO THAT A PERSON MAY APPROACH WITHIN 3" OF SIGNAGE WITHOUT ENCOUNTERING PROTRUDING OBJECTS OR STANDING WITHIN THE SWING OF A DOOR.

5 A4.0 **ACCESSIBLE SIGNAGE**
N.T.S.

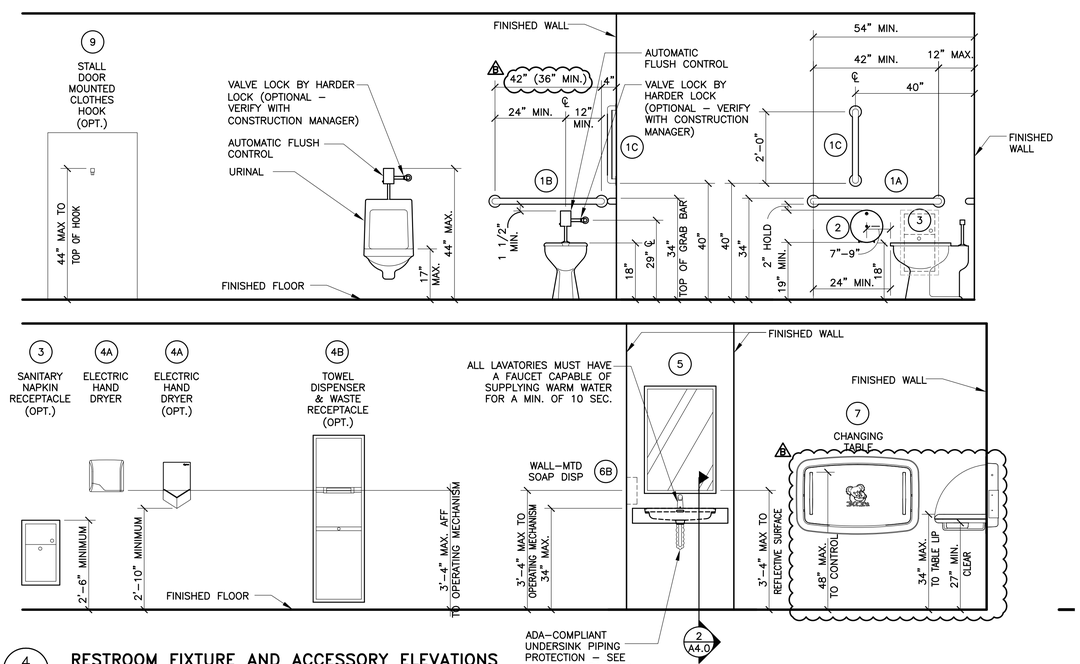

4 A4.0 **RESTROOM FIXTURE AND ACCESSORY ELEVATIONS**
1/2" = 1'-0"

	ITEM (SEE NOTE 2)	MFR MODEL #	SUPPLIER	BACKUP SUPPORT (SEE NOTE 3)
1A	GRAB BAR 42"	BOBRICK B-6806X42	HUGHES SUPPLY (866) 310-3576 MCDCOORD@HAJOCA.COM	(1)2x6 4'-0" LONG CENTER MOUNTED
1B	GRAB BAR 42"	B-6806X42		
1C	GRAB BAR 24"	B-6806X24		
2	TOILET TISSUE DISPENSER, JUMBO, SURFACE MOUNTED	BRADLEY 5424	HUGHES SUPPLY (866) 310-3576 MCDCOORD@HAJOCA.COM	FRAME WALL OPENING PER MANUFACTURER'S RECOMMENDATIONS
3	SANITARY NAPKIN RECEPTACLE, RECESSED (OPTIONAL)	BOBRICK B-354	HUGHES SUPPLY (866) 310-3576 MCDCOORD@HAJOCA.COM	
4A	HAND DRYER, ENERGY EFFICIENT MODEL, ADA, ALUMINUM BRUSHED	WORLD DRYER L-971 SlimDri	HUGHES SUPPLY (866) 310-3576 MCDCOORD@HAJOCA.COM	FRAME WALL OPENING PER MANUFACTURER'S RECOMMENDATIONS
4A OPTION	HAND DRYER, ENERGY EFFICIENT MODEL ADA, SPRAYED NICKEL	DYSON AIRBLADE V	HUGHES SUPPLY (866) 310-3576 MCDCOORD@HAJOCA.COM	
4B OPTION	TOWEL DISPENSER & WASTE RECEPTACLE, COMBINATION, RECESSED (OPTIONAL)	BOBRICK B-3974	HUGHES SUPPLY (866) 310-3576 MCDCOORD@HAJOCA.COM	
5	MIRROR, CHANNEL FRAME	BOBRICK B-165 2436	HUGHES SUPPLY (866) 310-3576 MCDCOORD@HAJOCA.COM	
6A	SOAP DISPENSER, COUNTER MOUNTED, 6" SPOUT (OPTIONAL)	BOBRICK B-82216	HUGHES SUPPLY (866) 310-3576 MCDCOORD@HAJOCA.COM	
6B	SOAP DISPENSER, WALL-MOUNTED	BOBRICK B-2112	HUGHES SUPPLY (866) 310-3576 MCDCOORD@HAJOCA.COM	
7	BABY CHANGING TABLE, HORIZONTAL, RECESSED, ADA COMPLIANT, STAINLESS STEEL	KOALA KARE KB310-SSRE	HUGHES SUPPLY (866) 310-3576 MCDCOORD@HAJOCA.COM	INSTALL PER MANUFACTURER'S RECOMMENDATIONS
7 OPTION "A"	BABY CHANGING TABLE, HORIZONTAL, SURFACE MOUNT, ADA COMPLIANT, STAINLESS STEEL	KOALA KARE KB310-SSWM	HUGHES SUPPLY (866) 310-3576 MCDCOORD@HAJOCA.COM	INSTALL PER MANUFACTURER'S RECOMMENDATIONS
8	DIAPER CONTAINER (OPTIONAL)	–	BY OWNER	
9	CLOTHES HOOK	BRADLEY 917	HUGHES SUPPLY (866) 310-3576 MCDCOORD@HAJOCA.COM	

NOTES:
1) SEE 4/A4.0 FOR ACCESSORY MOUNTING HEIGHTS
2) SELECT ONE ITEM FROM ITEM GROUPS 4 & 6, VERIFY WITH AREA CONSTRUCTION MANAGER.
3) CUT BACK-UP SUPPORTS BETWEEN STUDS SO FACE OF SUPPORT IS FLUSH W/WALL STUD

3 A4.0 **RESTROOM ACCESSORY SCHEDULE**

REV	DATE	DESCRIPTION	BY
-	-	-	-
-	-	-	-
B	12/03/20	SERVICE AREA OPTIMIZATION	DJA
-	11/13/20	USRD SAO SET REVIEW	DJA
A	05/05/20	CIVIL & PLAN REVIEW COMMENTS	DJA
-	01/23/20	PERMIT SET	DJA
-	01/13/20	USRD PROGRESS SET REVIEW	DJA

I hereby certify that this plan, specification or report was prepared by me or under my direct supervision and that I am a duly registered ARCHITECT under the laws of the State of Kansas.

Signature
12/03/20
Date
Registration Number

PREPARED BY:
reprise DESIGN
Architecture, INC.
ARCHITECTURE & PLANNING
12400 PORTLAND AVENUE SOUTH, SUITE 100
BURNSVILLE, MN. 55337
EMAIL: DATA@REPRISEDESIGN.COM
PHONE: (952) 252-4042
FAX: (952) 252-4043

PREPARED FOR:
McDonald's USA, LLC

©2020 McDonald's USA, LLC
These drawings and specifications are the confidential and proprietary property of McDonald's USA, LLC and shall not be copied or reproduced without written authorization. The contract documents were prepared for use on this specific site in connection with a single project. They are not intended for use on a different site or at a later time. Use of these drawings for reference or example on another project requires the services of an architect or engineer in the employ of McDonald's USA, LLC. The contract documents for reuse on another project is not authorized.

DRAWN BY DJA
STD ISSUE DATE 2019_11
REVIEWED BY KD
DATE ISSUED 01/23/20
RQ#19175

TITLE
2019 STANDARD BUILDING – BB20
4597F10-WOOD/WOOD

DESCRIPTION
WOOD BEARING WALLS W/FIBER CEMENT SIDING & Ci
WOOD ROOF TRUSS FRAMING
FIBER CEMENT PANEL/BATTEN/ALPOLIC PANEL/BRICK EXT. FINISH

SITE ID 015-0071
SITE ADDRESS 605 SOUTH 7TH STREET, KANSAS CITY, KS

SHEET NO.
015-0071.00.B
A4.0
RESTROOM PLAN

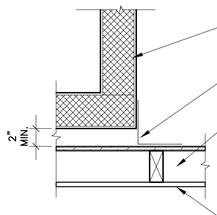

1 A4.1 **CLOSURE DETAIL @ COOLER**
1 1/2"=1'-0"

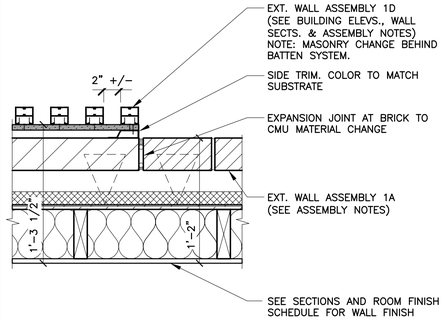

2 A4.1 **BATTEN TO BRICK TRANSITION**
1 1/2"=1'-0"

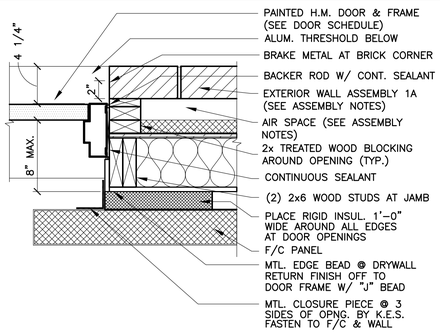

3 A4.1 **DOOR JAMB @ F/C DOOR**
1 1/2"=1'-0"

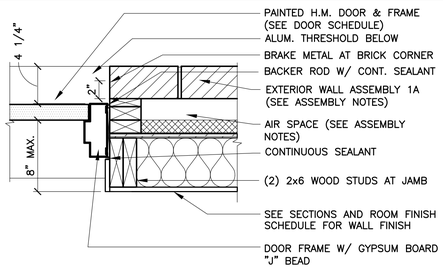

4 A4.1 **EXT.DOOR JAMB DETAIL**
1 1/2"=1'-0"

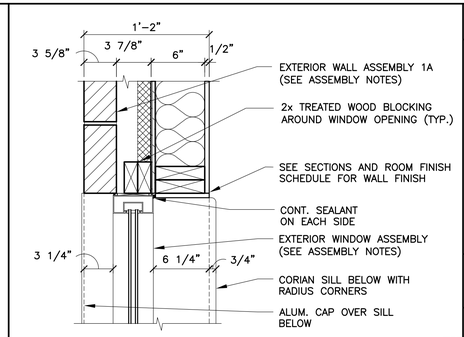

5 A4.1 **CREW WINDOW JAMB DETAIL**
1 1/2"=1'-0"

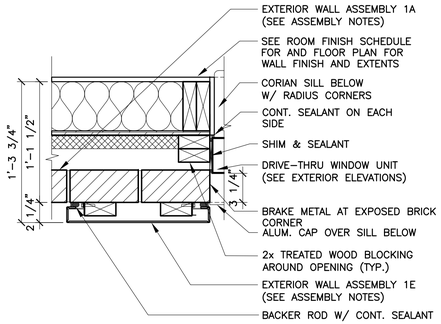

6 A4.1 **ORDER WINDOW JAMB DETAIL**
1 1/2"=1'-0"

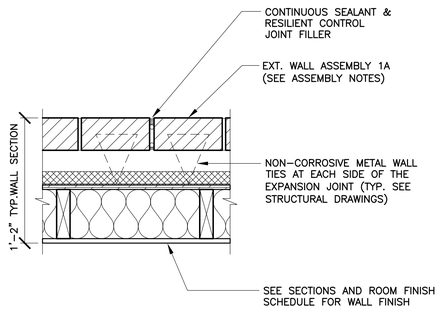

7 A4.1 **EXPANSION JOINT DETAILS**
1 1/2"=1'-0"

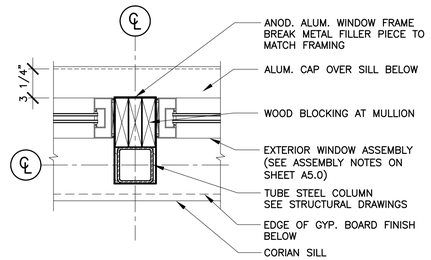

8 A4.1 **DETAIL @ COLUMN**
1 1/2"=1'-0"

9 A4.1 **NOT USED**
–

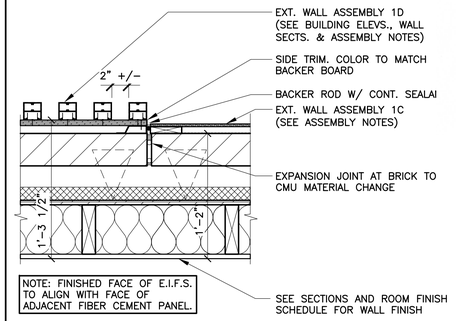

10 A4.1 **BATTEN TO FIBER CEMENT PANEL TRANSITION**
1 1/2"=1'-0" 4597 ONLY

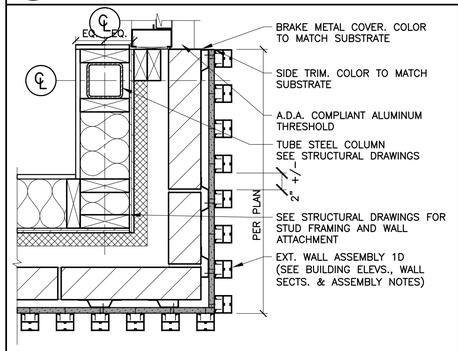

11 A4.1 **CORNER DETAIL @ ENTRY**
1 1/2"=1'-0" 4597 ONLY

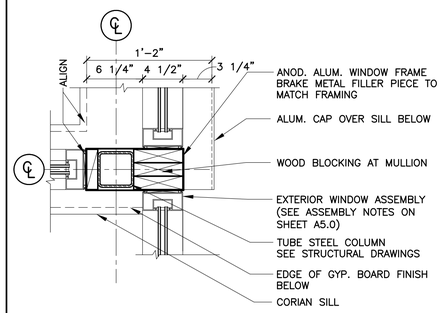

12 A4.1 **DETAIL @ COLUMN**
1 1/2"=1'-0" 4597 ONLY

13 A4.1 **NOT USED**
–

14 A4.1 **NOT USED**
–

15 A4.1 **NOT USED**
–

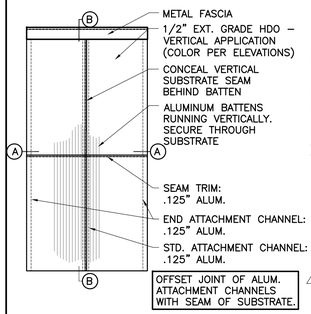

ELEVATION DETAIL AT BATTENS

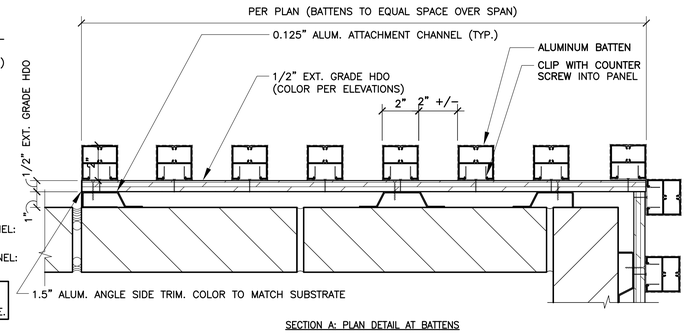

SECTION A: PLAN DETAIL AT BATTENS
SCALE: 3"=1'-0"
ALL SUBSTRATE, HAT CHANNELS AND TRIM BY GC.

PRIME AND PAINT ALL SIDES AND EDGES PRIOR TO INSTALLING

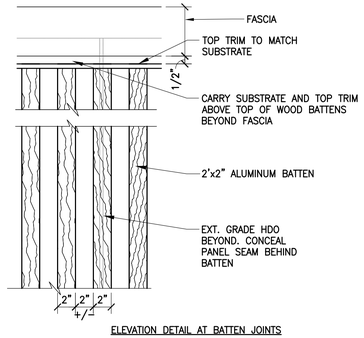

ELEVATION DETAIL AT BATTEN JOINTS
SCALE: 1 ½"=1'-0"

16 A4.1 **ALUMINUM BATTEN DETAIL**
1/4"=1'-0"

17 A4.1 **NOT USED**
–

18 A4.1 **NOT USED**
–

REV	DATE	DESCRIPTION	BY
-	-	-	-
-	-	-	-
-	-	-	-
-	-	-	-
-	-	-	-
-	01/23/20	PERMIT SET	DIA
-	01/13/20	USRO PROGRESS SET REVIEW	DIA

I hereby certify that this plan, specification or report was prepared by me or under my direct supervision and that I am a duly registered ARCHITECT under the laws of the State of Kansas.

Signature
01/23/20
Date
Registration Number

PREPARED BY:
reprise DESIGN
Architecture, Inc.
ARCHITECTURE & PLANNING
12400 PORTLAND AVENUE SOUTH, SUITE 100
BURNSVILLE, MN 55337
EMAIL: DATA@REPRISEDESIGN.COM
PHONE: (952) 252-4042
FAX: (952) 252-4043

PREPARED FOR:
McDonald's USA, LLC

©2020 McDonald's USA, LLC

These drawings and specifications are the confidential and proprietary property of McDonald's USA, LLC and shall not be copied or reproduced without written authorization. The contract documents were prepared for use on this specific site in conjunction with this project and are not suitable for reuse on a different site or at a later time. Use of these drawings for reference or example on another project, requires the services of qualified licensed design professionals to insure that the contract documents for reuse on another project is not authorized.

DRAWN BY: D/A
STD ISSUE DATE: 2019_11
REVIEWED BY: KD
DATE ISSUED: 01/23/20
RO#19175

TITLE: 2019 STANDARD BUILDING – BB20 4597F10–WOOD/WOOD

DESCRIPTION: WOOD BEARING WALLS W/FIBER CEMENT SIDING & CI WOOD ROOF TRUSS FRAMING FIBER CEMENT PANEL/BATTEN/ALPOLIC PANEL/BRICK EXT. FINISH

SITE ID: 015–0071
SITE ADDRESS: 605 SOUTH 7TH STREET, KANSAS CITY, KS

SHEET NO.: 015–0071.00.0
A4.1
PLAN DETAILS

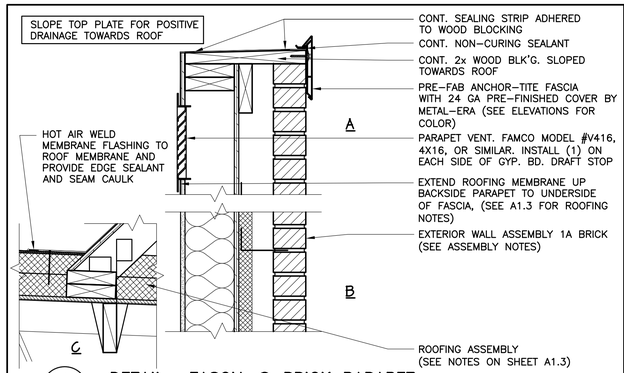

1 A5.0 **DETAIL– FASCIA @ BRICK PARAPET**
1 1/2" = 1'-0"

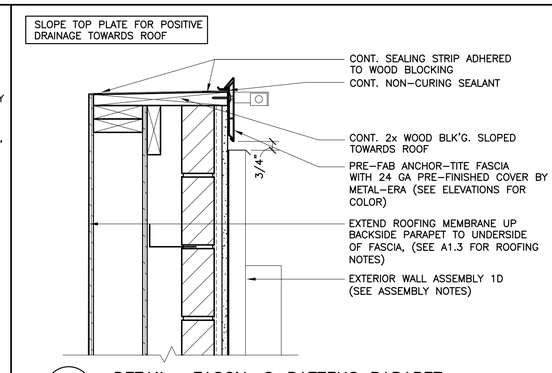

2 A5.0 **DETAIL– FASCIA @ BATTENS PARAPET**
1 1/2" = 1'-0"

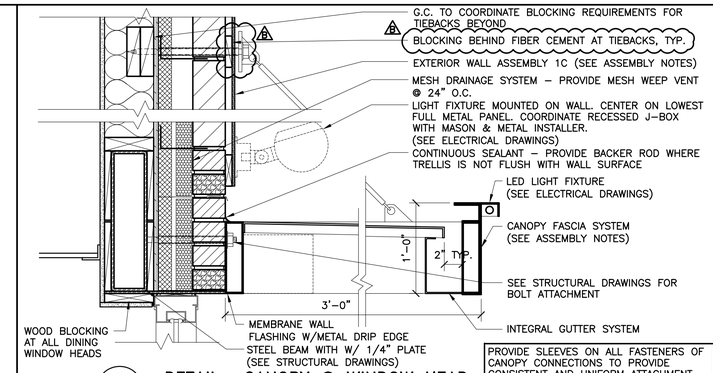

3 A5.0 **DETAIL– CANOPY @ WINDOW HEAD**
1 1/2" = 1'-0"

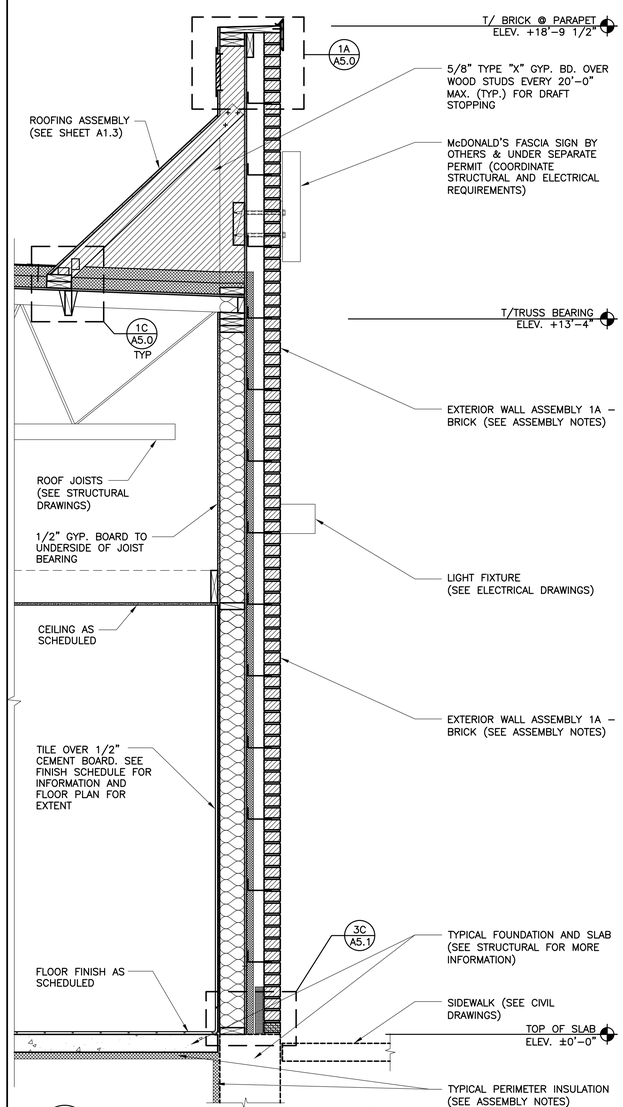

5 A5.0 **WALL SECTION – RESTROOM (NDT SIDE)**
3/4" = 1'-0"

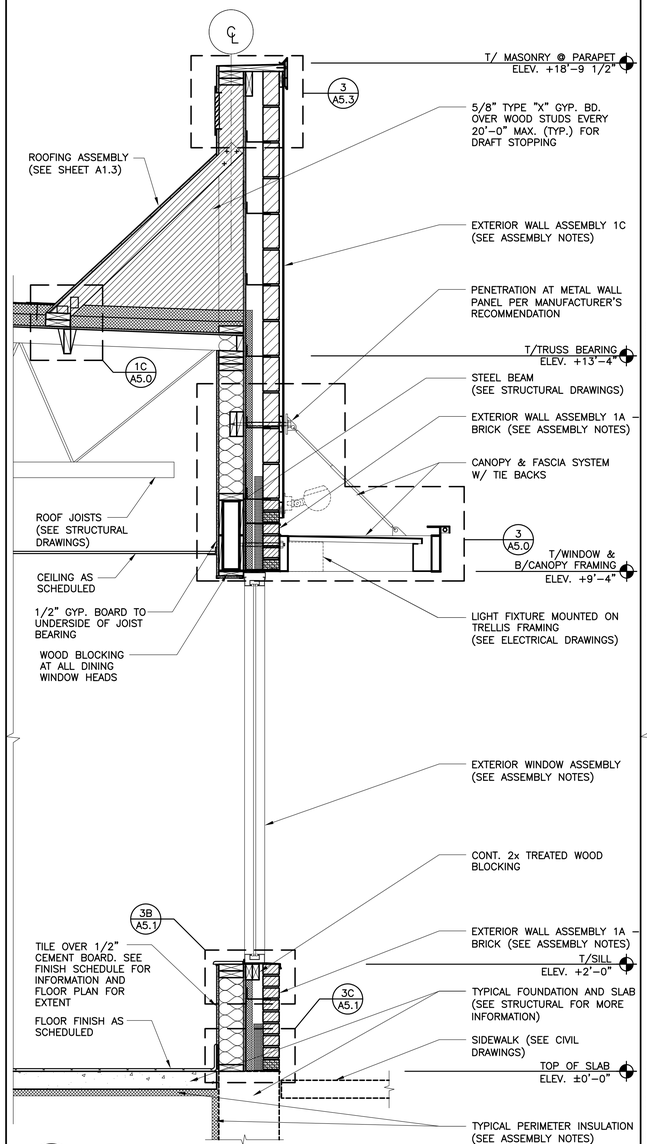

6 A5.0 **WALL SECTION – DINING ROOM (NDT SIDE)**
3/4" = 1'-0"

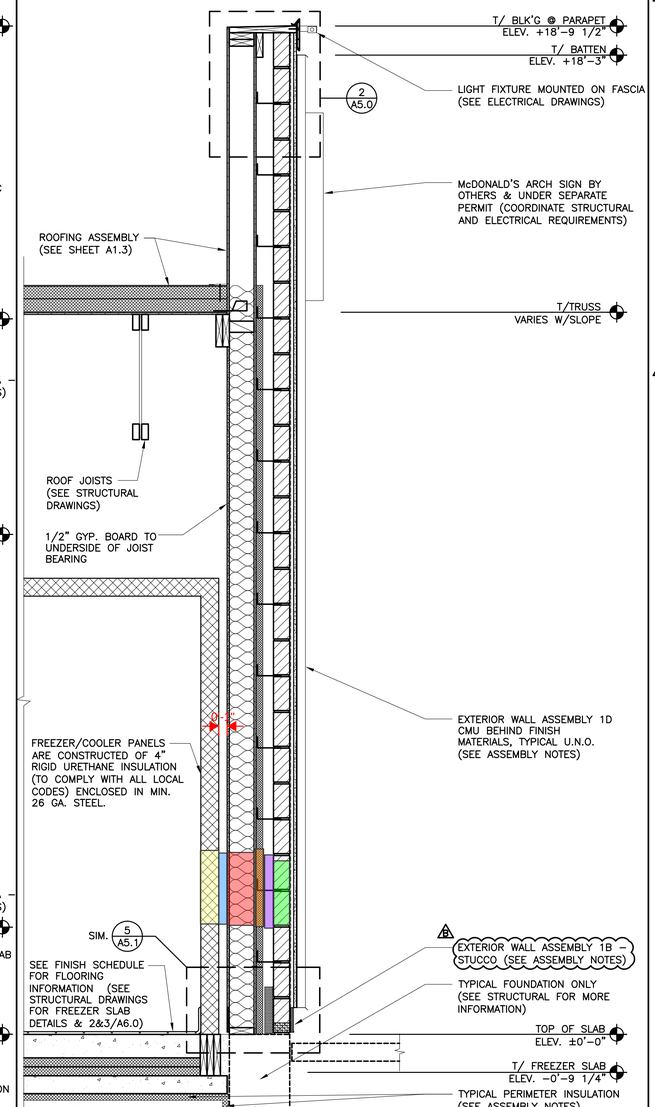

7 A5.0 **WALL SECTION – FREEZER/COOLER (REAR)**
3/4" = 1'-0"

EXTERIOR WALL ASSEMBLIES

FROM EXTERIOR TO INTERIOR

1A. BRICK VENEER

1. FULL HEIGHT MODULAR SIZE MASONRY, 4" BRICK VENEER (VISIBLE MASONRY) OR 4" CONCRETE BLOCK VENEER WITH INTEGRAL WATER REPELLENT (NON-VISIBLE), W/NON-CORROSIVE METAL TIES VERTICALLY & HORIZONTALLY PER STRUCTURAL. PROVIDE 10" HIGH MESH DOVETAIL CAVITY DRAINAGE SYSTEM. PROVIDE MESH WEEP VENTS 24" O.C. AT ALL FLASHING LOCATIONS. MORTAR: SM750 SILVERSTONE BY SPEC MIX OR EQ.
2. AIR SPACE – SIZE VARIES ACCORDING TO OVERALL WALL WIDTH. AT TYP. WALL (14"), AIR SPACE IS 2 3/8" WIDE.

1B. STUCCO SYSTEM

1. 1/8" STUCCO FINISH COAT BY PAREX INC. ON 3/8" BROWN COAT, ON 3/8" SCRATCH COAT, ON WIRE LATH, ON BUILDING WRAP, ON STUCCO WRAP. FINISH: HYDROPHOBIC. TEXTURE: 3.25 SAND COURSE. INSTALL PER LOCAL CODES AND MANUFACTURERS SPECIFICATIONS ON TERMINATION AND INSTALLATION DETAILS.

1C. FIBER CEMENT PANELS

1. HARDIEPANEL VERTICAL SIDING, SMOOTH, 48" WIDTH, HZ5, PRE-PRIMED, COLOR: RAL 7022. INSTALL PER LOCAL CODES AND MANUFACTURERS SPECIFICATIONS ON TERMINATION AND INSTALLATION DETAILS.
2. OVER WALL ASSEMBLY 1A

1D. VERTICAL BATTEN SYSTEM

1. ALUMINUM BATTEN W/MOUNTING BACK RAIL. SIZE: 2" WIDE x 2" DEEP. REFER TO EXTERIOR ELEVATIONS FOR COLOR. INSTALL PER LOCAL CODES AND MANUFACTURERS SPECIFICATIONS ON TERMINATI AND INSTALLATION DETAILS. BY SUPPLIER. GC INSTALL
2. 1/2" EXTERIOR HIGH DENSITY OVERLAY (HDO) PLYWOOD, BB, GRO 1. HDO BOTH FACES. APA TRADEMARKED. SAND WITH COURSE GRI ALL SURFACES PRIOR TO PRIMING. PRIME AND PAINT BOTH SIDES AND ALL EDGES. BY GC, INSTALL BY GC. ALUM EDGE TRIM BY GC COLOR TO MATCH SUBSTRATE.
3. 1" 0.125 ALUMINUM CHANNEL BY GC, INSTALL BY GC
4. OVER WALL ASSEMBLY 1A
5. VERTICAL BATTEN SYSTEM BY:
   B+N INDUSTRIES (650) 393-2315 — TUBELITE (214) 288-5801
   PIRKKO LUCCHESI — CHASITY DICKINSON
   plucchesi@bnind.com — mcdonalds@tubelite.com

1E. ALPOLIC ACM PANEL

1. 4MM PE CORE ALPOLIC METAL PANEL (4CASM-BJ CLIP SYSTEM). ELEVATIONS FOR COLOR.
   PROVIDE MFG. SHOP DRAWINGS TO ARCHITECT FOR REVIEW.
   ALPOLIC DAVID KEARNEY 757-286-1005 dave_kearney@m-chem.com
2. OVER WALL ASSEMBLY 1A
2. 1 1/2" RIGID INSULATION, R-7.5 VALUE
3. PERMEABLE BUILDING WRAP OVER 1/2" EXTERIOR GRADE PLYWOOD. INSTALL PER LOCAL CODES AND MFR'S SPEC'S.
4. 2x6 WOOD STUD FRAMING @ 16" O.C. (WITH CONTINUOUS DRAFTSTOP/FIRESTOP BLOCKING AT FINISH CEILING LEVEL).
5. UNFACED BATT INSULATION (R VALUE = 19).
6. "CERTAINTEED MEMBRAIN" SMART VAPOR RETARDER (SEMI-VAPOR PERMEABLE) BY CERTAINTEED OR EQUAL.
7. 1/2" CEMENT BOARD SUBSTRATE FOR ALL TILE LOCATIONS. (TYP.) NON TILE LOCATIONS: 1/2" GYPSUM BOARD TO EXTEND TO DECK ABOVE. UNLESS NOTED OTHERWISE.
   ALL GYP. BOARD MUST SCORE 10 PER ASTM D3273, REFERENCE CURRENT PROJECT MANUAL.
8. SEE A1.0 & ROOM FINISH SCHEDULE FOR ADDITIONAL SUBSTRATE INFORMATION.

EXTERIOR WINDOW ASSEMBLY

(STOREFRONT & ENTRANCE SYSTEM)

GLAZING REQ'S: U VALUE = 0.29 U VALUE "DOOR"= 0.77 SHGC = 0.40 PPG SOLARBAN 60 ON 2ND SURFACE OF CLEAR 6MM GLASS |AIR (10%)/KRYTON (90%)| 6MM CLEAR GLASS, OR EQUAL

1. DARK BRONZE ANODIZED ALUMINUM FRAME, THERMALLY BROKEN WITH HEAD RECEIVER CHANNEL.
2. 1" TEMPERED INSULATED GLAZING
3. PROVIDE FLASHING AT HEAD & SILL – CONTINUOUS SEALANT.
4. PROVIDE METAL CAP @ EXTERIOR BRICK SILL
5. 1/2" CORIAN SILL AT INTERIOR

CANOPY SYSTEM W/ FASCIA

CANOPY INFORMATION SHOWN IN CONSTRUCTION DOCUMENTS IS FOR DESIGN INTENT ONLY. APPROVED MANUFACTURERS SHALL PROVIDE A COMPLETE AND CODE COMPLIANT FINAL DESIGN. REFER TO ELEVATIONS FOR COLOR OF ELEMENTS

1. CANOPY STRUCTURE/OUTRIGGERS: CONT. 2" x 8" PAINTED ALUM. TUBE. PROVIDE CLOSURE PIECE WHERE TUBE ENDS ARE EXPOSED.
2. FASCIA: CONT. 10"H PAINTED ALUM. w/ LED DOWN-LIGHT FIXTURE OVER CANOPY STRUCTURE.
3. TIEBACKS: PAINTED ALUM. THREADED RODS BY MFR. LOCATIONS AS INDICATED ON ROOF PLAN. FINAL LOCATIONS AND QUANTITY SHALL BE AS INDICATED ON TRELLIS INSTALLATION DRAWINGS.
4. WHERE INDICATED ON ROOF PLAN, PROVIDE PAINTED ALUM. PANEL INFILL WITH INTEGRAL GUTTER AND SCUPPER TO MATCH OUTRIGGERS. PANEL TO PROVIDE POSITIVE SLOPE FOR DRAINAGE.
5. SYSTEM SHALL ALLOW FOR MOVEMENT AT EXPANSION JOINTS AND FOR MOVEMENT OF EXTERIOR WALL SYSTEM ON WHICH THE CANOPY IS MOUNTED.
6. STRUCTURAL ATTACHMENTS & LOAD CALCULATIONS SHALL BE FURNISHED BY CANOPY SYSTEM DESIGNER OF RECORD. SUPPLIER'S DESIGNER OF RECORD SHALL DESIGN PER PREVAILING CODES.
7. CANOPY SYSTEM SHALL BE SELECTED FROM ONE OF THE SUPPLIERS LISTED BELOW.
8. MANUFACTURER SHALL PROVIDE INSTALLER WITH INSTALLATION INSTRUCTIONS. MANUFACTURER SHALL DESIGN CANOPY IN ACCORDANCE WITH THE WALL SYSTEM AND BLOCKING AS INDICATED IN THE CONSTRUCTION DOCUMENTS.
9. INSTALLER SHALL NOTIFY CANOPY DESIGNER OF RECORD, McDONALD'S ACM, G.C. AND ARCHITECT OF ANY DEFICIENCIES THAT WOULD NOT ALLOW FOR THE PROPER INSTALLATION OF THE CANOPY. CANOPY SHALL NOT BE INSTALLED UNTIL DEFICIENCIES HAVE BEEN CORRECTED IN ACCORDANCE WITH THE CONSTRUCTION DOCUMENTS AND THE CANOPY MANUFACTURER'S INSTALLATION INSTRUCTIONS.

CANOPY SYSTEM BY:
GREENHECK (715) 355-3942
www.greenheck.com

ALL-LITE (817) 509-2300
www.alllite.com

AWNEX (770) 704-7140
www.awnexinc.com

WHITE FASCIA & LED LIGHTING BY:
EVERBRITE (888) 857-4078
www.everbrite.com

PERSONA (800) 843-9888
www.personasigns.com

FOUNDATION AND PERIMETER INSULATION

1. SEE STRUCTURAL DRAWINGS FOR FOUNDATION AND SLAB DETAILS
2. PROVIDE RIGID UNDERSLAB INSULATION AS FOLLOWS:
   - VERTICALLY FROM TOP OF FOOTING TO BOTTOM OF SLAB.
   - HORIZONTALLY: 4'-0" MIN.
   - R-VALUE: R-10

4 A5.0 **ASSEMBLY NOTES**

REV	DATE	DESCRIPTION	BY
-	-	-	-
-	-	-	-
B	12/03/20	SERVICE AREA OPTIMIZATION	DIA
-	11/13/20	USRD SAO SET REVIEW	DIA
A	05/05/20	CNL & PLAN REVIEW COMMENTS	DIA
-	01/23/20	PERMIT SET	DIA
-	01/13/20	USRD PROGRESS SET REVIEW	DIA

I hereby certify that this plan, specification or report was prepared by me or under my direct supervision and that I am a duly registered ARCHITECT under the laws of the State of Kansas.

Signature — Registration Number
12/03/20
Date

PREPARED BY:
reprise DESIGN Architecture, INC.
ARCHITECTURE & PLANNING
12400 PORTLAND AVENUE SOUTH, SUITE 100
BURNSVILLE, MN 55337
EMAIL: DATA@REPRISEDESIGN.COM
PHONE: (952) 252-4042
FAX: (952) 252-4043

PREPARED FOR:
McDonald's USA, LLC

©2020 McDonald's USA, LLC
These drawings and specifications are the confidential and proprietary property of McDonald's USA, LLC and shall not be copied or reproduced without written authorization. The contract documents were prepared for use on this specific site at McDonald's USA, LLC's direction. Any other use on a different site or at a later time. Use of these drawings for reference or example on another project requires the services of a licensed architect to review the drawings to be used as contract documents for reuse on another project is not authorized.

DRAWN BY: DIA
STD ISSUE DATE: 2019_11
REVIEWED BY: KD
DATE ISSUED: 01/23/20
RD#19175

TITLE: 2019 STANDARD BUILDING – BB20
4597F10-WOOD/WOOD
DESCRIPTION: WOOD BEARING WALLS W/FIBER CEMENT SIDING & CI WOOD ROOF TRUSS FRAMING FIBER CEMENT PANEL/BATTEN/ALPOLIC PANEL/BRICK EXT. FINISH
SITE ID: 015-0071
SITE ADDRESS: 605 SOUTH 7TH STREET, KANSAS CITY, KS

SHEET NO. 015-0071.00.B
A5.0
WALL SECTIONS

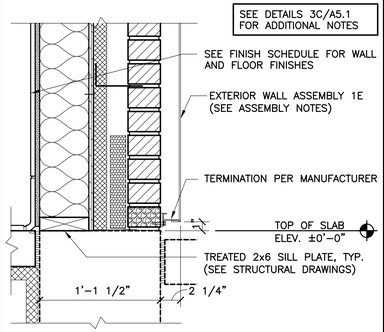

1 A5.1 **DETAIL– APOLIC TERMINATION**
1 1/2" = 1'-0"

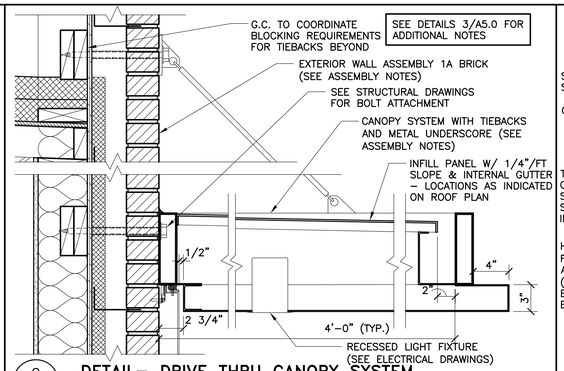

2 A5.1 **DETAIL– DRIVE THRU CANOPY SYSTEM**
1 1/2" = 1'-0"

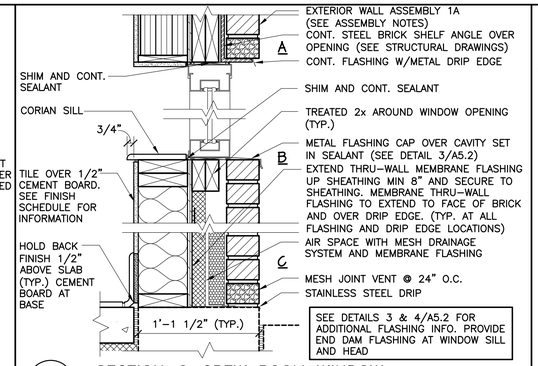

3 A5.1 **SECTION @ CREW ROOM WINDOW**
1 1/2" = 1'-0"

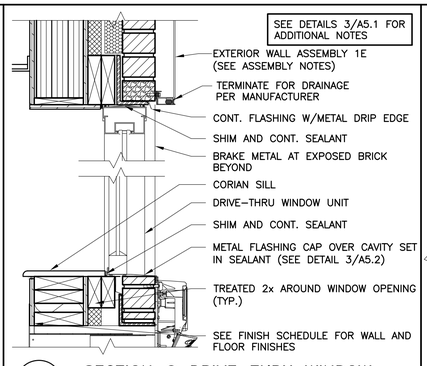

4 A5.1 **SECTION @ DRIVE–THRU WINDOW**
1 1/2" = 1'-0"

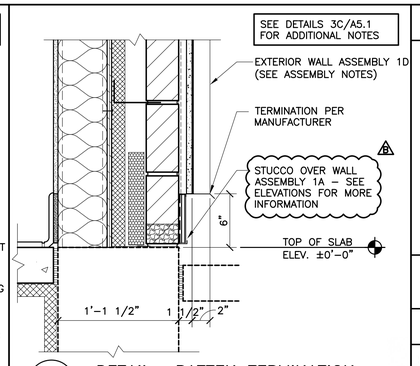

5 A5.1 **DETAIL– BATTEN TERMINATION**
1 1/2" = 1'-0"

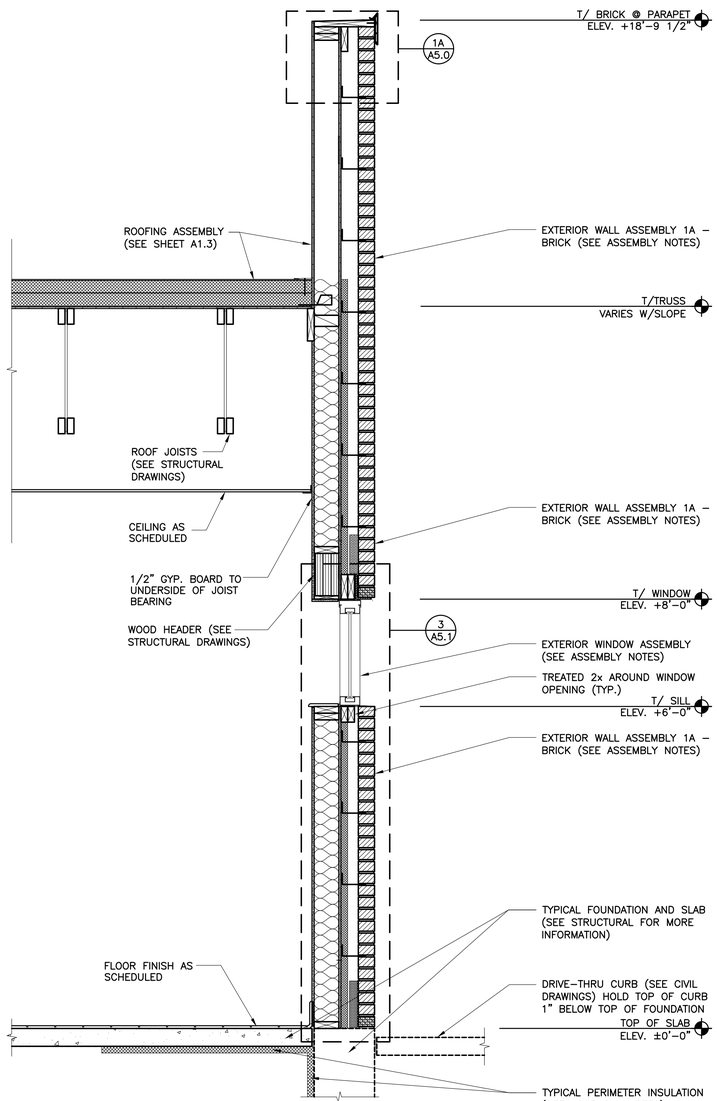

6 A5.1 **WALL SECTION – CREW ROOM (REAR)**
3/4" = 1'-0"

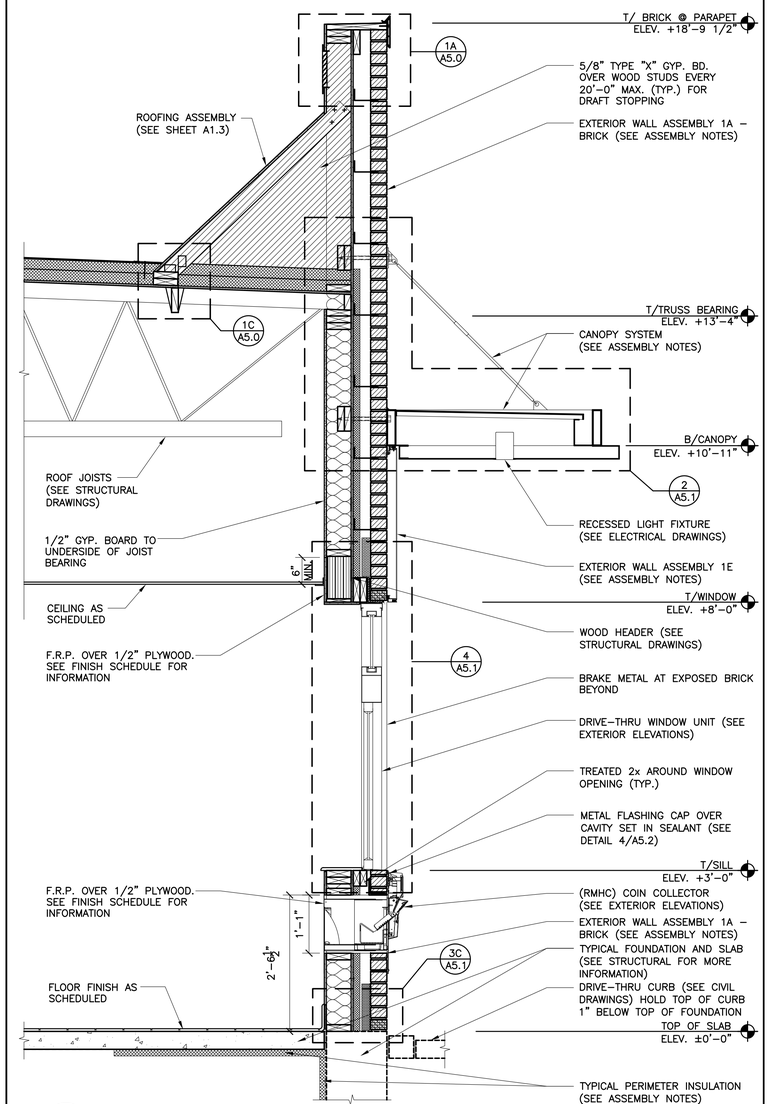

7 A5.1 **WALL SECTION – ORDER WINDOW**
3/4" = 1'-0"

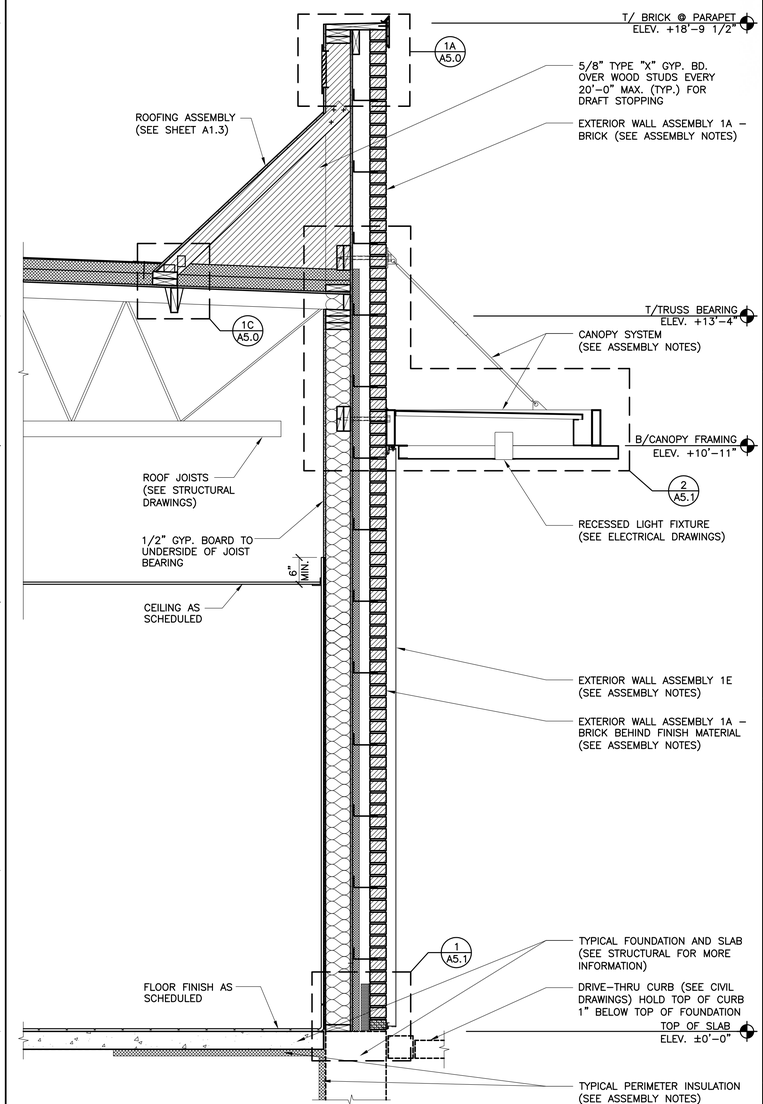

8 A5.1 **WALL SECTION – PRESENTER WINDOW SURROUND**
3/4" = 1'-0"

REV	DATE	DESCRIPTION	BY
-	-	-	-
-	-	-	-
B	12/03/20	SERVICE AREA OPTIMIZATION	DIA
-	11/13/20	USRD SAD SET REVIEW	DIA
A	05/05/20	CIVIL & PLAN REVIEW COMMENTS	DIA
-	01/23/20	PERMIT SET	DIA
-	01/13/20	USRD PROGRESS SET REVIEW	DIA

I hereby certify that this plan, specification or report was prepared by me or under my direct supervision and that I am a duly registered ARCHITECT under the laws of the State of Kansas.

Signature: BRIAN A. ROBBEN, ARCHITECT, 12/03/20
Date: 12/03/20
Registration Number

PREPARED BY:
reprise DESIGN
Architecture, INC.
ARCHITECTURE & PLANNING
12400 PORTLAND AVENUE SOUTH, SUITE 100
BURNSVILLE, MN 55337
EMAIL: DATA@REPRISEDESIGN.COM
PHONE: (952) 252-4042
FAX: (952) 252-4043

PREPARED FOR: McDonald's USA, LLC

©2020 McDonald's USA, LLC

These drawings and specifications are the confidential and proprietary property of McDonald's USA, LLC and shall not be copied or reproduced without written authorization. The contract documents were prepared for use on this specific site in conjunction with the laws and regulations that govern the use on a different site or at a later time. Use of these drawings for reference or example on another project requires the services of a licensed architect and professional engineers in the jurisdiction. The contract documents for reuse on another project is not authorized.

DRAWN BY: DIA
STD ISSUE DATE: 2019_11
REVIEWED BY: KD
DATE ISSUED: 01/23/20
RO#19175

TITLE: 2019 STANDARD BUILDING – BB20 4597F10–WOOD/WOOD
DESCRIPTION: WOOD BEARING WALLS W/FIBER CEMENT SIDING & CI WOOD ROOF TRUSS FRAMING FIBER CEMENT PANEL/BATTEN/APOLIC PANEL/BRICK EXT. FINISH
SITE ID: 015–0071
SITE ADDRESS: 605 SOUTH 7TH STREET, KANSAS CITY, KS

SHEET NO. 015–0071.00.B
A5.1
WALL SECTIONS

1 / A5.2 NOT USED

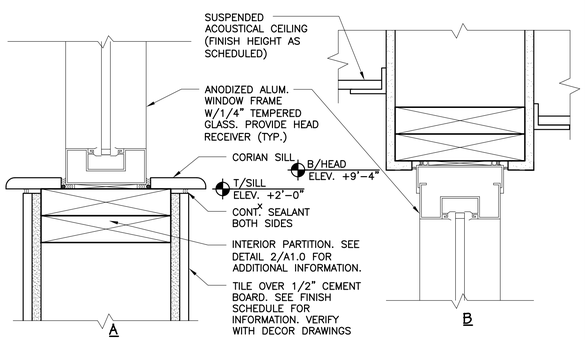

2 / A5.2 HEAD & SILL @ INTERIOR VESTIBULE WALL
3" = 1'-0"

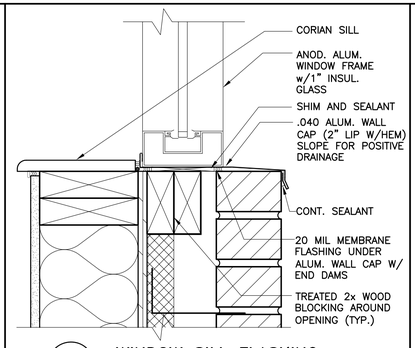

3 / A5.2 WINDOW SILL FLASHING
3" = 1'-0"

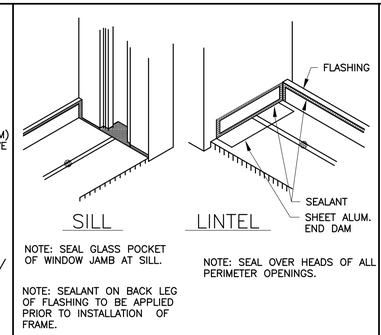

4 / A5.2 FLASHING DETAIL @ JAMB
N.T.S.

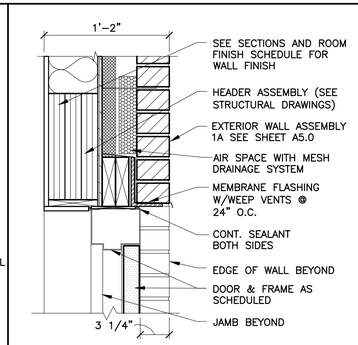

5 / A5.2 SECTION @ DOOR HEAD
1 1/2" = 1'-0"

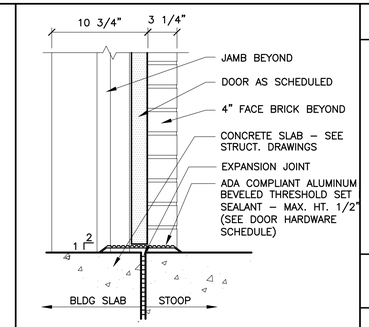

6 / A5.2 SECTION @ DOOR SILL
1 1/2" = 1'-0"

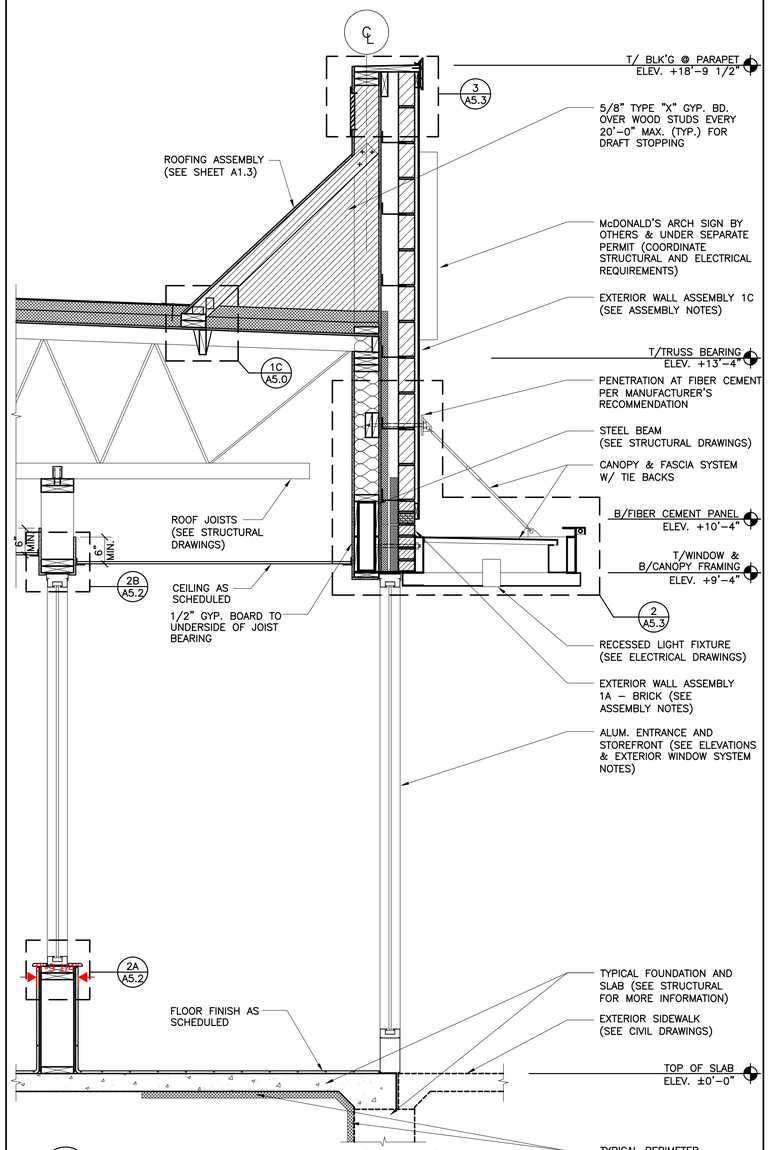

7 / A5.2 WALL SECTION – VESTIBULE/ENTRY (NDT SIDE)
3/4" = 1'-0"

REV	DATE	DESCRIPTION	BY
-	-	-	-
-	-	-	-
-	-	-	-

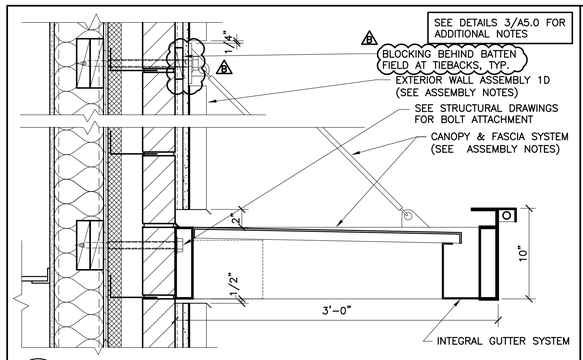

1 A5.3 **DETAIL– CANOPY @ BATTENS**
1 1/2" = 1'-0"

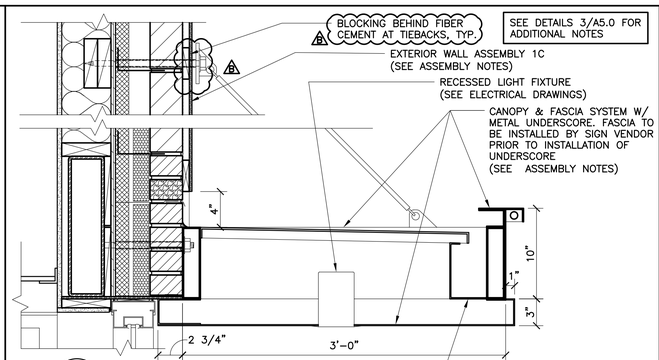

2 A5.3 **DETAIL– CANOPY @ WINDOW HEAD**
1 1/2" = 1'-0"

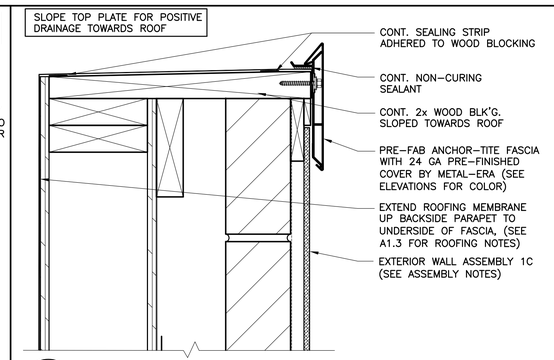

3 A5.3 **DETAIL– FASCIA @ FIBER CEMENT PANEL PARAPET**
3" = 1'-0"

4 A5.3 **NOT USED**
–

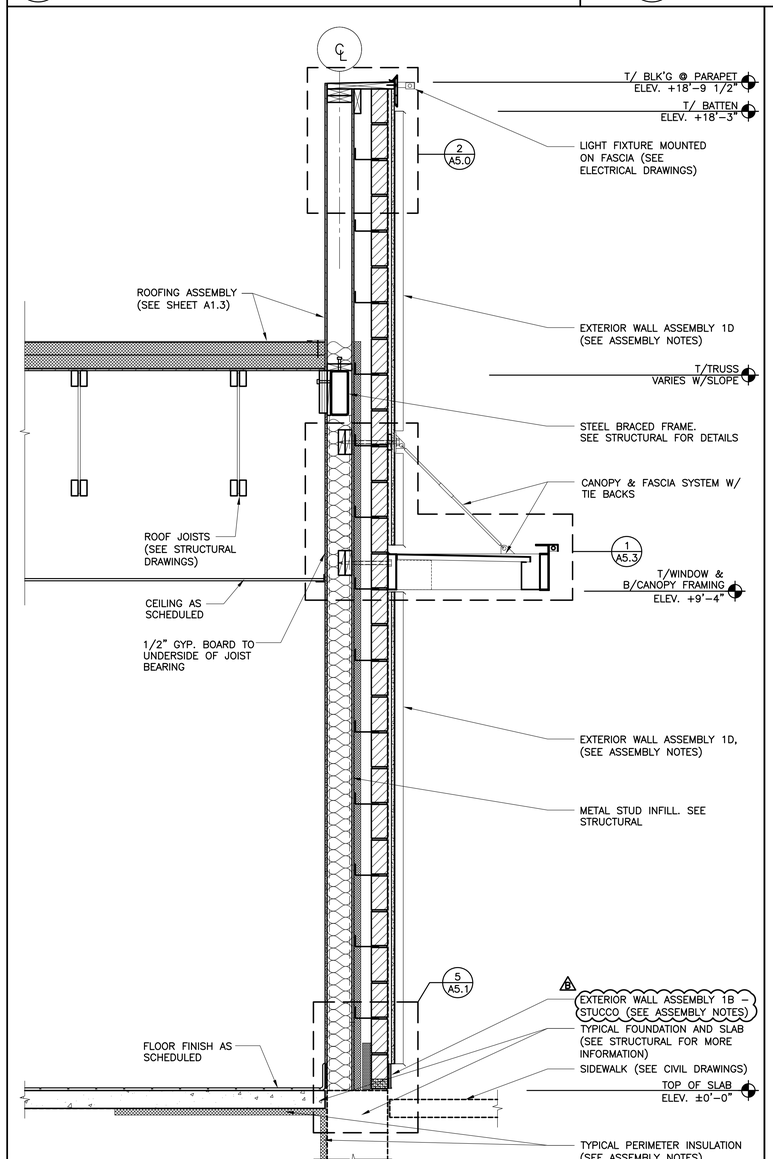

5 A5.3 **WALL SECTION – FRONT CORNER BATTEN**
3/4" = 1'-0"

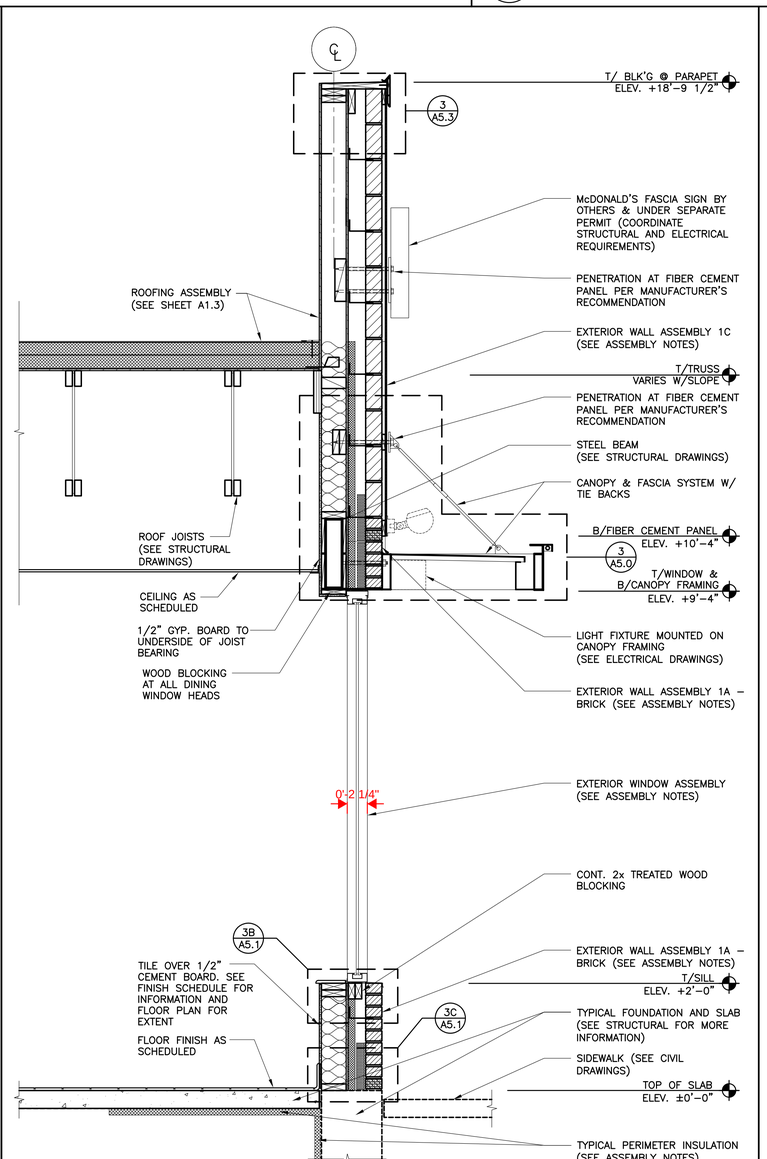

6 A5.3 **WALL SECTION – STORE FRONT (FRONT)**
3/4" = 1'-0"

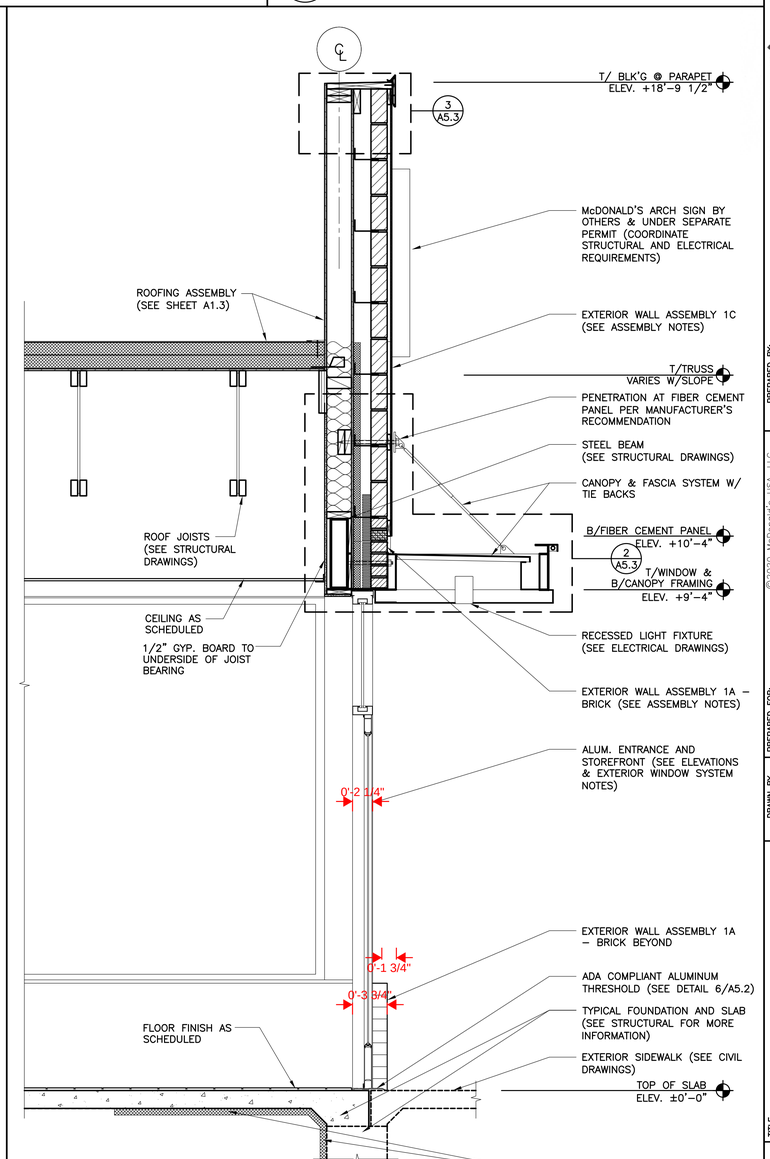

7 A5.3 **WALL SECTION – FRONT ENTRANCE**
3/4" = 1'-0"

REV	DATE	DESCRIPTION	BY
-	-	-	-
-	-	-	-
B	12/03/20	SERVICE AREA OPTIMIZATION	DIA
-	11/13/20	USRD SAO SET REVIEW	DIA
A	05/05/20	CIVIL & PLAN REVIEW COMMENTS	DIA
-	01/23/20	PERMIT SET	DIA
-	01/13/20	USRD PROGRESS SET REVIEW	DIA

I hereby certify that this plan, specification or report was prepared by me or under my direct supervision and that I am a duly registered ARCHITECT under the laws of the State of Kansas.

Signature
12/03/20
Date
Registration Number

PREPARED BY:
reprise DESIGN
Architecture, INC.
ARCHITECTURE & PLANNING
12400 PORTLAND AVENUE SOUTH, SUITE 100
BURNSVILLE, MN 55337
EMAIL: DATA@REPRISEDESIGN.COM
PHONE: (952) 252–4042
FAX: (952) 252–4043

PREPARED FOR:
McDonald's USA, LLC

©2020 McDonald's USA, LLC
These drawings and specifications are the confidential and proprietary property of McDonald's USA, LLC and shall not be copied or reproduced without written authorization. The contract documents were prepared for use on this specific site in connection with a McDonald's restaurant. Any reuse on a different site or at a later time. Use of these drawings for reference, or example, on another project requires the services of a licensed architect and professional staff to prepare contract documents for reuse on another project is not authorized.

DRAWN BY: DIA
STD ISSUE DATE: 2019_11
REVIEWED BY: KD
DATE ISSUED: 01/23/20
RQ#19175

TITLE: 2019 STANDARD BUILDING – BB20 4597F10–WOOD/WOOD
DESCRIPTION: WOOD BEARING WALLS W/FIBER CEMENT SIDING & CI WOOD ROOF TRUSS FRAMING FIBER CEMENT PANEL/BATTEN/ALPOLIC PANEL/BRICK EXT. FINISH
SITE ID: 015–0071
SITE ADDRESS: 605 SOUTH 7TH STREET, KANSAS CITY, KS

SHEET NO. 015–0071.00.B
A5.3
WALL SECTIONS

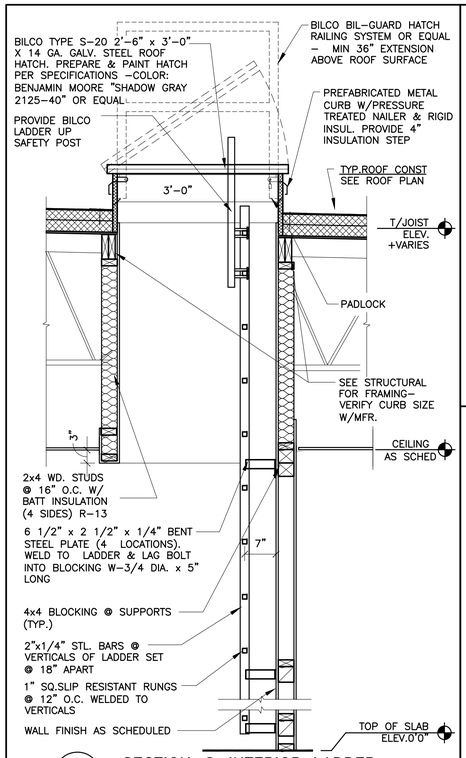

1 A6.0 **SECTION @ INTERIOR LADDER**
3/4"=1'–0"

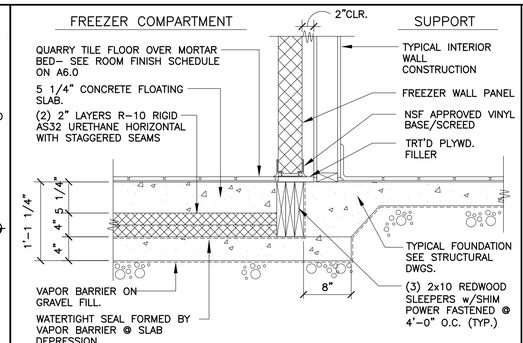

2 A6.0 **FREEZER FLOOR DETAIL @ INT. WALL**
1"=1'–0"

NOTE:
1. BUTT FINISH & TRIM PIECES TO S.S. ENDCAP & CORNER GUARD.
2. CORNER GUARDS & END CAPS TYPICAL AT KITCHEN, SUPPORT ROOM, & SELF SERVE BEVERAGE AREAS
3. SEE 'CG' KEY NOTE ON A1.0

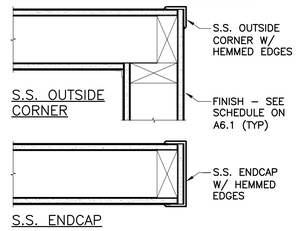

4 A6.0 **STAINLESS STEEL DETAILS**
1/2"=1'–0"

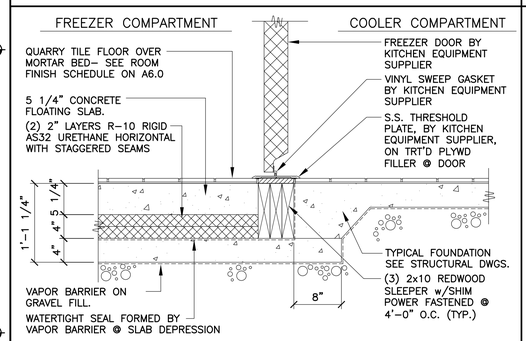

3 A6.0 **FREEZER FLOOR DETAIL @ DOOR**
1"=1'–0"

NOTE:
SEE FINISH SCHEDULES & DETAILS ON SHEET A6.1 FOR BASE INFORMATION. STEP BASE MATERIAL W/RAISED SLAB

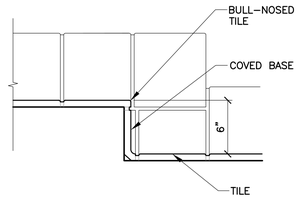

5 A6.0 **DETAIL RAISED SLAB**
1 1/2"=1'–0"

FRAME TYPES

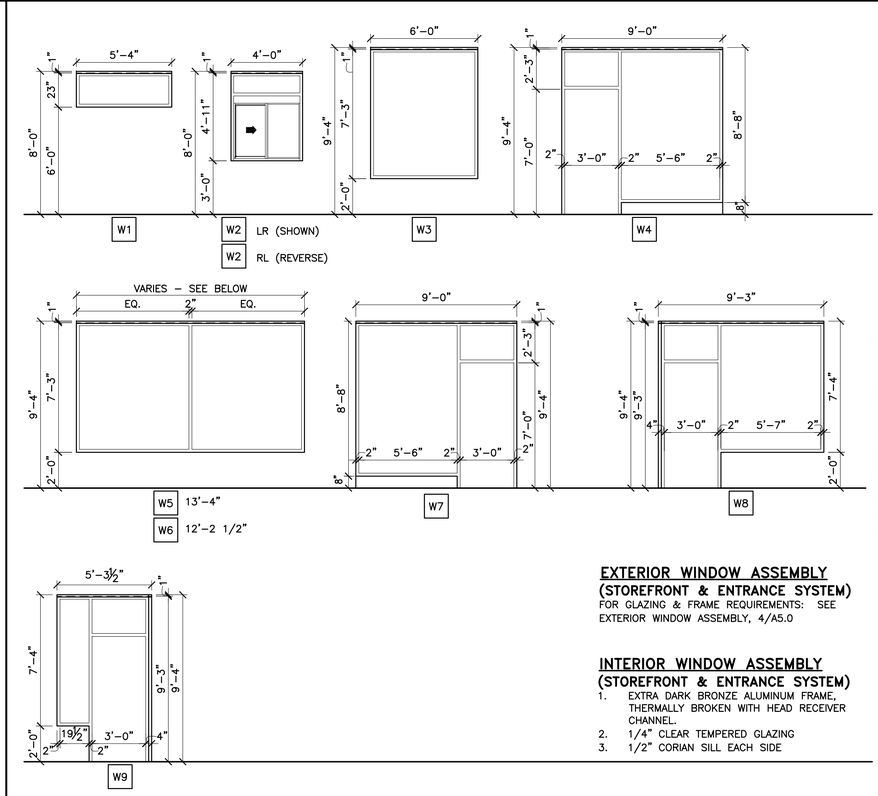

EXTERIOR WINDOW ASSEMBLY
(STOREFRONT & ENTRANCE SYSTEM)
FOR GLAZING & FRAME REQUIREMENTS: SEE EXTERIOR WINDOW ASSEMBLY, 4/A5.0

INTERIOR WINDOW ASSEMBLY
(STOREFRONT & ENTRANCE SYSTEM)
1. EXTRA DARK BRONZE ALUMINUM FRAME, THERMALLY BROKEN WITH HEAD RECEIVER CHANNEL.
2. 1/4" CLEAR TEMPERED GLAZING
3. 1/2" CORIAN SILL EACH SIDE

DOOR HARDWARE

GENERAL NOTES:
1. ALL EXIT DOORS SHALL BE KEYLESS IN THE DIRECTION OF EGRESS.
2. THE OPENING FORCE OF ALL EXT. PUSH/PULL DOORS SHALL NOT EXCEED 8 1/2 LBS.
3. THE OPENING FORCE OF ALL INTERIOR PUSH/PULL DOORS SHALL NOT EXCEED 5 LBS.
4. PROVIDE PANIC HARDWARE FOR ALL EXTERIOR DOORS AS NOTED ON THE DOOR SCHEDULE.
5. ALL DOOR HARDWARE SHALL NOT REQUIRE TIGHT GRASPING, TIGHT PINCHING OR TWISTING OF THE WRIST TO OPERATE.

DOOR #1 &#1A – ENTRY DOOR/EMERGENCY EXIT (1A NOT USED)
1. 1 EA CLOSER LCN 4021 x 18
2. 3 EA HINGES OFFSET PIVOT ANSI –A–156.4 GRADE 1; PROVIDE EXPOSED PARTS OF CAST ALUMINUM ALLOY, AS SUPPLIED BY DOOR MANUFACTURER.
3. 1 EA (DOOR #1 ONLY) PULL HANDLE ROCKWOOD MFG. MODEL: RM3301. SIZE: 1–1/4" DIA. CTC: 5'–10". FINISH: TO MATCH STOREFRONT DOOR. OFFSET MOUNTING: TYPE 1XHD – THRU BOLT HEAVY DUTY
4. 1 EA PANIC HARDWARE ADAMS RITE MFG. CO. 8800 SERIES WITH OUTSIDE CYLINDER (FINISH TO MATCH STOREFRONT DOOR)
5. 1 EA THRESHOLD NATIONAL GUARD PRODUCTS, INC. SADDLE TYPE THRESHOLD 325, 36" WIDE x 1/2" RISE (ADA ACCESSIBLE).
6. 1 EA WEATHER STRIPPING: PROVIDE COMPRESSION WEATHER STRIPPING AGAINST FIXED STOPS. AT OTHER EDGES PROVIDE SLIDING WEATHER STRIPPING RETAINED IN ADJUSTABLE STRIP MORTISED INTO DOOR EDGE. PROVIDE EPDM OR VINYL GASKET WEATHER STRIPPING IN BOTTOM DOOR RAIL ADJUSTABLE FOR CONTACT W/ THRESHOLD.
7. 1 EA SIGN MOUNT ONTO DOOR, TO READ "THIS DOOR MUST REMAIN UNLOCKED WHENEVER THE BUILDING IS OCCUPIED/DURING BUSINESS HOURS."

DOOR #2 – VESTIBULE
1. 1 EA CLOSER LCN 4041 x 18
2. 3 EA HINGES OFFSET PIVOT ANSI –A–156.4 GRADE 1; BY DOOR MANUFACTURER.
3. 1 EA PUSH/PULL HANDLE HAGER PUSH/PULL SET 164D/V/B.

DOOR #3 – STORAGE DELIVERY
1. 1 EA HINGE 780–112HD 83" ALUM HAGER
2. 1 EA CLOSER 4111 H–CUSH ALUM LCN
3. 1 EA PANIC 9975EO–LD 48" SP28 V.DUPRIN
4. 1 EA TRIM 990DT US26D V.DUPRIN
5. 1 EA EXIT ALARM EAX2500 FLUSH DETEX
6. 1 EA LOCKGUARD CLP110 US32D DON–JO
7. 1 EA TREADPLATE 24 X 46 UMCO
8. 1 EA WTH/STP160V 48 X 84 N.GUARD
9. 1 EA THRESHOLD 325HD 48" N.GUARD
10. 1 EA SWEEP 101VA 48" N.GUARD
11. 1 EA VIEW FRAME LVGLFMD 9 X 9 DKB W/FLAP ON INSIDE N.GUARD

DOOR #3A – FREEZER DELIVERY
1. 1 EA HINGE780–112HD 83" ALUM HAGER
2. 1 EA DEADBOLT B661P 626 SCHLAGE
3. 1 EA PULL H3E US28 HAGER
4. 1 EA LOCKGUARD CLP110 US32D DON–JO
5. 1 EA TREADPLATE 24 X 46 UMCO
6. 1 EA WTH/STP 160V 48 X 84 N.GUARD
7. 1 EA THRESHOLD 325HD 48" N.GUARD
8. 1 EA SWEEP 101VA 48" N.GUARD

DOOR #4 – REAR EXIT
1. 1 EA HINGE 780–112HD 83" ALUM HAGER
2. 1 EA CLOSER 4111 H–CUSH ALUM LCN
3. 1 EA PANIC 9975EO–LD 36" SP28 V.DUPRIN
4. 1 EA TRIM 990DT US26D V.DUPRIN
5. 1 EA EXIT ALARM EAX2500 FLUSH DETEX
6. 1 EA LOCKGUARD CLP110 US32D DON–JO
7. 1 EA TREADPLATE 24 X 34 UMCO
8. 1 EA WTH/STP160V 36 X 84 N.GUARD
9. 1 EA THRESHOLD 325HD 36" N.GUARD
10. 1 EA SWEEP 101VA 36" N.GUARD
11. 1 EA VIEW FRAME LVGLFMD 9 X 9 DKB W/FLAP ON INSIDE N.GUARD

DOOR #5 – RESTROOM ENTRY
1. 3 EA HINGE BB1279 4 ½ X 4 ½ US26D HAGER
2. 1 EA CLOSER LDPA4031 SNB ALUM LCN
3. 1 EA PUSH PLATE 30S 4 X 32 US32D 40"AFF MOUNTED TO CENTER OF PLATE
4. 1 EA PULL PLATE LADDER PULL HANDLE WITH DECORATIVE FIXING, 32"L 1"DIA #S–32–1000 – UMCO 32D. 40" AFF MOUNTED CENTER OF PULL
   ALT. OPTION: 1 EA PULLPLATE SANITGRASP
5. 2 EA KICKPLATE 190S 8 X 34 US32D HAGER
6. 1 EA DOOR STOP 236W US32D HAGER
7. 1 EA FINGER GRD MKIA PUSH SIDE BRN F.SAFE
8. 1 EA FINGER GRD MKIB PULL SIDE BRN F.SAFE
9. 1 EA STEPNPULL PULL SIDE (OPTIONAL)

DOOR #6 – ADA STALL
1. 2 EA HINGE 1250 4 ½ X 4 ½ US26D HAGER
2. 1 EA HINGE BB1279 4 ½ X 4 ½ US26D HAGER
3. 1 EA DEADBOLT B571 X 10–087 214EE X 12 X 291 X 626
4. 2 EA BACK TO BACK LADDER PULL HANDLE, 16"L, 1"DIA #S–16–1000 BTB–UMCO 32D MOUNTED 6" FROM EDGE OF DOOR TO CENTER OF SCREWS – 28½" MOUNTED 28½" FROM TOP OF DOOR TO C/L OF PULL
5. 1 EA ROBE HOOK 917 BRADLEY
6. 1 EA DOOR STOP 236W US32D HAGER

DOOR #6A – STANDARD STALL
1. 2 EA HINGE 1250 4 ½ X 4 ½ US26D HAGER
2. 1 EA HINGE BB1279 4 ½ X 4 ½ US26D HAGER
3. 1 EA DEADBOLT B571 X 10–087 214EE X 12 X 291 X 626
4. 2 EA BACK TO BACK LADDER PULL HANDLE, 16"L, 1"DIA #S–16–1000 BTB–UMCO 32D MOUNTED 6" FROM EDGE OF DOOR TO CENTER OF SCREWS – 28½" MOUNTED 28½" FROM TOP OF DOOR TO C/L OF PULL
5. 1 EA ROBE HOOK 917 BRADLEY
6. 1 EA DOOR STOP 236W US32D HAGER

DOOR #7 – DINING ROOM JANITORS CLOSET
1. 3 EA HINGE BB1279 4 ½ X 4 ½ US26D HAGER
2. 1 EA LOCK ND80PD RHO 626 SCHLAGE

DOOR #8 – COMPUTER CLOSET
1. 4 EA HINGE BB1279 4 ½ X 4 ½ US26D HAGER
2. 1 EA LOCK ND80PD RHO 626 SCHLAGE
3. 1 EA LOUVER L700RX DKB 12 X 18 N.GUARD

DOOR #8A – COMPUTER CLOSET
1. 8 EA HINGE BB1279 4 ½ X 4 ½ US26D HAGER
2. 1 EA LOCK ND80PD RHO 626 SCHLAGE
3. 2 EA FLUSH BOLT 283D US26D HAGER

DOOR #9 – COOLER
1. ALL DOOR HARDWARE FOR THE REFRIGERATED COOLER / FREEZER SHALL BE PROVIDED BY THE MANUFACTURER.
   MANUFACTURER: KOLPAK @ HY 641 N. McCORKLE PARK ROAD PARSONS, TN 38363 PHONE: 800–344–4675
   HARDWARE PROVIDED:
   1. MAGNETIC PERIMETER DOOR GASKET
   2. THRESHOLD REINFORCED PLASTIC (FRP)
   3. POSI–SEAL DOOR CLOSURE
   4. STATIONARY CHROME DOOR PULL HANDLE
   5. INTERIOR SAFETY RELEASE HANDLE
   6. HINGES – BRUSHED CHROME CAST ALLOY

DOOR #10 CREW
1. 1 EA HINGE 780–112HD 83" ALUM HAGER
2. 1 EA CLOSER 1461–RW/PA ALUM LCN
3. 1 EA PANIC 9975EO–LD 36" SP28 V.DUPRIN A
4. 1 EA ELEC STRIKE 6211 24V DC FSE US32D SCHLAGE
5. 1 EA PWR SUPPLY PS902 SCHLAGE
6. 1 EA DOOR BELL BSV–24P SURFACE MOUNTED
7. 3 EA PUSH BUTTON 621–RD–DA HDP 626 SCHLAGE
8. 1 EA TREADPLATE 24 X 34 UMCO
9. 1 EA VIEW FRAME LFRA100 6 X 27 DKB N.GUARD
10. 1 EA GLASS 5 X 26 X ¼ UMCO

DOOR #14 (NOT USED) MANAGERS OFFICE
1. 3 EA HINGE BB1279 4 ½ X 4 ½ US26D HAGER
2. 1 EA LOCK ND53PD RHO 626 SCHLAGE
3. 1 EA VIEW FRAME LFRA100 24 X 30 DKB N.GUARD
4. 1 EA GLASS 23 X 29 X ¼ CLEAR UMCO

DOOR #15 CO2
1. 3 EA HINGE 780–112HD 83" ALUM HAGER
2. 1 EA LOCK ND80PD RHO 626 SCHLAGE
3. 1 EA LOCK GUARD CLP110 US32D DON JO
4. 1 EA WTH/STP 160V 36 X 84 N.GUARD
5. 1 EA THRESHOLD 425E 36" N.GUARD
6. 1 EA SWEEP 101VA 36" N.GUARD
7. 1 EA SEC. LOUVER LVRSG–3 DKB 18 X 18 N.GUARD

DOOR #16 (NOT USED) CREW ROOM
1. 3 EA HINGE BB1279 4 ½ X 4 ½ US26D HAGER
2. 1 EA LOCK ND10S RHO 626 SCHLAGE
3. 1 EA VIEW FRAME LFRA100 24 X 30 DKB N.GUARD
4. 1 EA GLASS 23 X 29 X ¼ CLEAR UMCO

DOOR SCHEDULE

DOOR SCHEDULE

MARK	DOOR MATERIAL	DOOR SIZE	TYPE	FRAME MATL	FRAME SIZE
1	ALUM.	3'–0"x7'–0"x1 3/4"	A	ALUM.	(NOTE 5)
1A		NOT USED			
2	ALUM.	3'–0"x7'–0"x1 3/4"	A	ALUM.	(NOTE 5)
3	H.M.	4'–0"x7'–0"x1 3/4"	B	H.M.	2"JAMB 4"HEAD
3A	H.M.	4'–0"x7'–0"x1 3/4"	C	H.M.	2"JAMB 4"HEAD
4	H.M.	3'–0"x7'–0"x1 3/4"	B	H.M.	2"JAMB 4"HEAD
5	S.C. WOOD W/ LAM.	3'–0"x6'–8"x1 3/4"	C	H.M.	2"JAMB 4"HEAD
6	S.C. WOOD W/ LAM.	3'–0"x4'–8"x1 3/4"	D	H.M.	2"JAMB 4"HEAD
6A	S.C. WOOD W/ LAM.	2'–6"x4'–8"x1 3/4"	D	H.M.	2"JAMB 4"HEAD
7	S.C. WOOD W/ LAM.	3'–0"x6'–8"x1 3/4"	C	H.M.	2"JAMB 4"HEAD A
8	S.C. WOOD W/ LAM.	2'–0"x8'–0"x1 3/4"	C	H.M.	2"JAMB 4"HEAD
8A	S.C. WOOD W/ LAM.	(2) 1'–0"x8'–0"x1 3/4"	E	H.M.	2"JAMB 4"HEAD
9	INSULATED METAL	3'–0"x6'–6"x4"	C	N/A	N/A
10	H.M.	3'–0"x7'–0"x1 3/4"	F	H.M.	2"JAMB 4"HEAD
11		NOT USED			
12		NOT USED			
13		NOT USED			A
14	S.C. WOOD W/ LAM.	3'–0"x6'–8"x1 3/4"	H	H.M.	2"JAMB 4"HEAD (NOT USED)
15	H.M.	3'–0"x7'–0"x1 3/4"	G	H.M.	2"JAMB 4"HEAD
16	S.C. WOOD W/ LAM.	3'–0"x6'–8"x1 3/4"	H	H.M.	2"JAMB 4"HEAD (NOT USED)

GENERAL DOOR NOTES:
1. GC TO INSTALL ACCESSIBILITY DOOR SIGNS WHERE REQ'D BY LOCAL CODES – SEE GENERAL NOTE 6, SHEET A1.0
2. DETEX ALARM CONTACT SWITCHES SHALL BE RECESSED INTO THE TOP OF THE DOOR & HOLLOW METAL FRAME ABOVE.
3. DOORS, DOOR FRAMES, & HARDWARE FOR DOORS 3, 3A, 4, 5, 6, 6A, 7, 8, 8A, 10, 14, 15, 16 SUPPLIED BY: UNIVERSAL MANUFACTURING 1–800–821–1414.
4. DOOR 9 SUPPLIED BY FREEZER/COOLER MANUFACTURER
5. SEE ELEVATIONS AND WALL SECTIONS
6. ALL INTERIOR SOLID CORE WOOD DOORS TO HAVE A LAMINATED FINISH, AS INDICATED PER DECOR DWGS
7. DOOR 8 & 8A – LAMINATED FINISH – "WILSONART DOVE GREY" D92–60
8. DOOR 3, 3A, 4 & 15 TO HAVE MAXIMUM U VALUE = 0.37

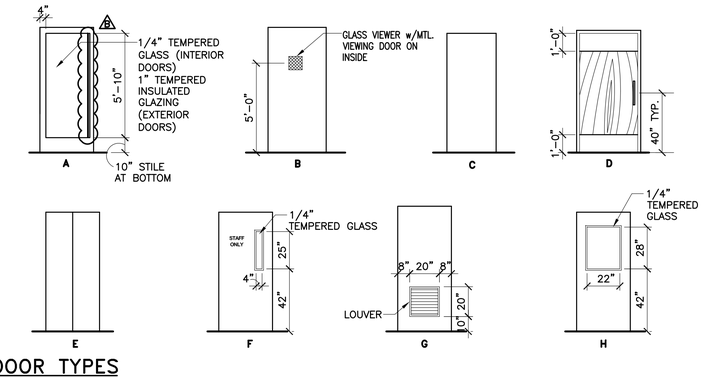

DOOR TYPES

REV	DATE	DESCRIPTION	BY
B	12/03/20	SERVICE AREA OPTIMIZATION	DIA
-	11/13/20	USRD SAD SET REVIEW	DIA
A	05/05/20	CIVIL & PLAN REVIEW COMMENTS	DIA
-	01/23/20	PERMIT SET	DIA
-	01/13/20	USRD PROGRESS SET REVIEW	DIA

I hereby certify that this plan, specification or report was prepared by me or under my direct supervision and that I am a duly registered ARCHITECT under the laws of the State of Kansas.
Signature: BRIAN K. ARBOGAST, ARCHITECT, 11-15-20
Date: 12/03/20
Registration Number

PREPARED BY:
reprise DESIGN Architecture, INC.
ARCHITECTURE & PLANNING
12400 PORTLAND AVENUE SOUTH, SUITE 100
BURNSVILLE, MN. 55337
EMAIL: DATA@REPRISEDESIGN.COM
PHONE: (952) 252–4042
FAX: (952) 252–4043

PREPARED FOR:
McDonald's USA, LLC

©2020 McDonald's USA, LLC
These drawings and specifications are the confidential and proprietary property of McDonald's USA, LLC and shall not be copied or reproduced without written authorization. The contract documents were prepared for use on this specific site in connection with a McDonald's restaurant. Any reuse on a different site or at a later time, or use of these drawings for reference, or example on another project, requires the services of a licensed architect and shall be at the reuser's risk. Only the contract documents for reuse on another project is not authorized.

TITLE: 2019 STANDARD BUILDING – BB20 4597F10–WOOD/WOOD
DESCRIPTION: WOOD BEARING WALLS W/FIBER CEMENT SIDING & CI WOOD ROOF TRUSS FRAMING FIBER CEMENT PANEL/BATTEN/ALPOLIC PANEL/BRICK EXT. FINISH
SITE ID: 015–0071
SITE ADDRESS: 605 SOUTH 7TH STREET, KANSAS CITY, KS

DRAWN BY: DIA
STD ISSUE DATE: 2019_11
REVIEWED BY: KD
DATE ISSUED: 01/23/20
RQ# 19175

SHEET NO. 015–0071.00.B
A6.0
DOOR & HARDWARE

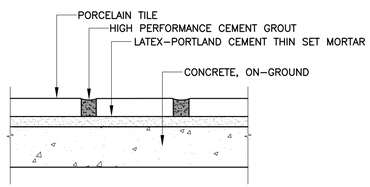

1 / A6.1 **RESTROOM FLOORS OVER CONCRETE**
N.T.S.

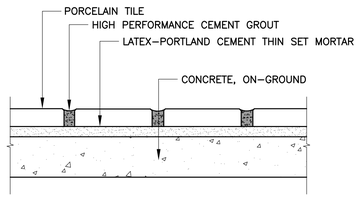

2 / A6.1 **DINING ROOM FLOORS OVER CONCRETE**
N.T.S.

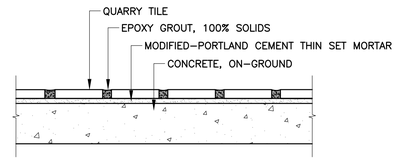

3 / A6.1 **KITCHEN/SUPPORT FLOORS OVER CONCRETE**
N.T.S.

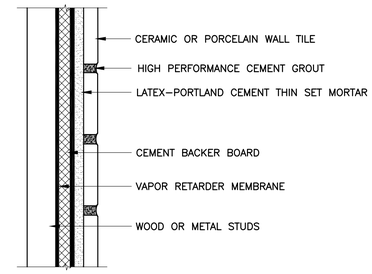

4 / A6.1 **DINING ROOM INTERIOR WALLS OVER WOOD OR METAL STUDS**
N.T.S.

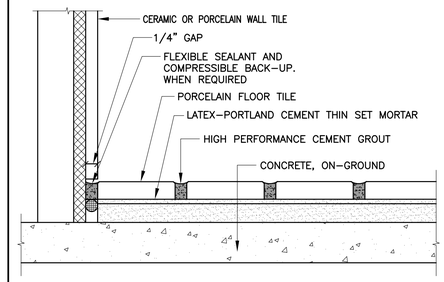

5 / A6.1 **DINING ROOM PERIMETER JOINT**
N.T.S.

WALL TILE SCHEDULE

MARK	ROOM NAME	WALL		MORTAR SETTING BED	GROUT
100	CUSTOMER SERVICE	CERAMIC OR PORCELAIN WALL TILE	(NOTE 4C)	LATEX–PORTLAND CEMENT THIN SET (MEDIUM BED)	HIGH PERFORMANCE CEMENT GROUT
101	DINING	CERAMIC OR PORCELAIN WALL TILE	(NOTE 4B & 4C)	LATEX–PORTLAND CEMENT THIN SET (MEDIUM BED)	HIGH PERFORMANCE CEMENT GROUT
102	WOMEN'S TOILET	CERAMIC OR PORCELAIN WALL TILE	(NOTE 4B)	LATEX–PORTLAND CEMENT THIN SET (MEDIUM BED)	HIGH PERFORMANCE CEMENT GROUT
103	MEN'S TOILET	CERAMIC OR PORCELAIN WALL TILE	(NOTE 4B)	LATEX–PORTLAND CEMENT THIN SET (MEDIUM BED)	HIGH PERFORMANCE CEMENT GROUT
104	SUPPORT	N/A – SEE ROOM FINISH SCHEDULE		----	----
105	KITCHEN	N/A – SEE ROOM FINISH SCHEDULE		----	----
106	PRESENTER–1	CERAMIC WALL TILE		LATEX–PORTLAND CEMENT THIN SET (MEDIUM BED)	HIGH PERFORMANCE CEMENT GROUT
107	ORDER	N/A – SEE ROOM FINISH SCHEDULE		----	----
108	MANAGER'S AREA	N/A – SEE ROOM FINISH SCHEDULE		----	----
109	CREW ROOM	CERAMIC WALL TILE	(NOTE 4B)	LATEX–PORTLAND CEMENT THIN SET (MEDIUM BED)	HIGH PERFORMANCE CEMENT GROUT
110	COOLER	N/A – SEE ROOM FINISH SCHEDULE		----	----
111	FREEZER	N/A – SEE ROOM FINISH SCHEDULE		----	----
112	COMPUTER CLOSET	N/A – SEE ROOM FINISH SCHEDULE		----	----
113	CREW ALCOVE	N/A – SEE ROOM FINISH SCHEDULE		----	----
114	JANITOR'S CLOSET	N/A – SEE ROOM FINISH SCHEDULE		----	----
115	VESTIBULE	CERAMIC WALL TILE		LATEX–PORTLAND CEMENT THIN SET (MEDIUM BED)	HIGH PERFORMANCE CEMENT GROUT
116	PRESENTER–2	CERAMIC WALL TILE		LATEX–PORTLAND CEMENT THIN SET (MEDIUM BED)	HIGH PERFORMANCE CEMENT GROUT
117	CO2	N/A – SEE ROOM FINISH SCHEDULE		----	----

GENERAL TILE NOTES:

1. REFERENCE: 2017 McDONALD'S PROJECT MANUAL – SECTION 093000
2. KITCHEN FLOOR TILE:
   TILE: CROSSVILLE 6"x6" 'METROPOLITAN QUARRY BASICS ABRASIVE'
   GROUT: CHARCOAL #47 BY MAPEI
   KERAPOXY IEG BLACK #10 BY MAPEI (FOR OPTIONAL GREY TILE)
   COLOR: PURITAN GRAY EXTRA ABRASIVE 57XA (STANDARD)
   MAYFLOWER RED 31XA (OPTIONAL) – VERIFY W/ MCDONALD'S ACM
3. DINING ROOM FLOOR TILE:
   MAIN & ACCENT: USE ONLY APPROVED TILE SERIES AND COLORS BY CROSSVILLE AND EUROWEST. VERIFY COLOR AND PATTERN PER INTERIOR DECOR DRAWINGS.
   A) MUST BE PER McDONALD'S USA, LLC: STANDARDS FOR INTERIOR FLOOR TILE AND APPROVED TILE LIST.
   B) MUST MEET THE FOLLOWING:
   STATIC COEFFICIENT OF FRICTION (PER ASTM F1667–96)
   LEVEL SURFACES: MINIMUM 0.50 DRY AND WET (McDONALD'S STANDARD)
   DYNAMIC COEFFICIENT OF FRICTION (PER ANSI A137.1 2012)
   LEVEL SURFACES: MINIMUM 0.5 DRY AND WET (McDONALD'S STANDARD)
4. TILE TRANSITION AND EDGE PROTECTION:
   A) TILE BASE (RESTROOM ONLY): SCHLUTER DILEX–AHK SERIES, BRUSHED STAINLESS STEEL.
   B) TILE EDGE PROTECTION (WALL TRANSITION): SCHLUTER–RONDEC–DB, SATIN ANODIZED ALUMINUM.
   C) TILE CORNER PROTECTION (OUTSIDE CORNER): SCHLUTER–RONDEC–AE, SATIN ANODIZED ALUMINUM.
   D) SEE INTERIOR DECOR DRAWINGS FOR ALL LOCATIONS.

   BEFORE FINAL INSPECTION. REMOVE PROTECTIVE COVERINGS AND PERFORM FINAL CLEANING.
5. TILE CLEANER: DETERDEK, BY FILA SURFACE CARE PRODUCTS – NO SUBSTITUTIONS ALLOWED
   CAN BE ORDERED BY EUROWEST, CROSSVILLE, OR DIRECT FROM MANUFACTURER: FILA/DETEREK
   POST INSTALLATION CLEANING REQUIRED ON ALL FOOR TILE INSTALLTIONS PRIOR TO RESTAURANT TURN OVER.

   APPLY CLEANER PER MANUFACTURER'S WRITTEN INSTRUCTIONS.
   REFERENCE: McDONDALDS PROJECT MANUAL – SECTION 09300 TILING INTERIOR.
6. GROUT COLOR AND MANUFACTURER AS INDICATED ON SHEET A1.0 AND INTERIOR DECOR DRAWINGS.

FLOOR TILE SCHEDULE

MARK	ROOM NAME	FLOOR	BASE	MORTAR SETTING BED	GROUT
100	CUSTOMER SERVICE	PORCELAIN FLOOR TILE (NOTE 3)	NONE – WALL TILE	LATEX–PORTLAND CEMENT THIN SET (MEDIUM BED)	HIGH PERFORMANCE CEMENT GROUT
101	DINING	PORCELAIN FLOOR TILE (NOTE 3)	NONE – WALL TILE	LATEX–PORTLAND CEMENT THIN SET (MEDIUM BED)	HIGH PERFORMANCE CEMENT GROUT
102	WOMEN'S TOILET	PORCELAIN FLOOR TILE (NOTE 3)	NONE – WALL TILE (NOTE 4A)	LATEX–PORTLAND CEMENT THIN SET (MEDIUM BED)	HIGH PERFORMANCE CEMENT GROUT
103	MEN'S TOILET	PORCELAIN FLOOR TILE (NOTE 3)	NONE – WALL TILE (NOTE 4A)	LATEX–PORTLAND CEMENT THIN SET (MEDIUM BED)	HIGH PERFORMANCE CEMENT GROUT
104	SUPPORT	QUARRY TILE (NOTE 2)	COVED QUARRY TILE	MODIFIED–PORTLAND CEMENT THIN SET MORTAR (MEDIUM BED)	CHEMICAL RESISTANT, WATER–CLEANABLE, TILE–SETTING EPOXY – 100% SOLIDS, INDUSTRIAL–GRADE
105	KITCHEN	QUARRY TILE (NOTE 2)	COVED QUARRY TILE	MODIFIED–PORTLAND CEMENT THIN SET MORTAR (MEDIUM BED)	CHEMICAL RESISTANT, WATER–CLEANABLE, TILE–SETTING EPOXY – 100% SOLIDS, INDUSTRIAL–GRADE
106	PRESENTER–1	QUARRY TILE (NOTE 2)	COVED QUARRY TILE	MODIFIED–PORTLAND CEMENT THIN SET MORTAR (MEDIUM BED)	CHEMICAL RESISTANT, WATER–CLEANABLE, TILE–SETTING EPOXY – 100% SOLIDS, INDUSTRIAL–GRADE
107	ORDER	QUARRY TILE (NOTE 2)	COVED QUARRY TILE	MODIFIED–PORTLAND CEMENT THIN SET MORTAR (MEDIUM BED)	CHEMICAL RESISTANT, WATER–CLEANABLE, TILE–SETTING EPOXY – 100% SOLIDS, INDUSTRIAL–GRADE
108	MANAGER'S AREA	QUARRY TILE (NOTE 2)	COVED QUARRY TILE	MODIFIED–PORTLAND CEMENT THIN SET MORTAR (MEDIUM BED)	CHEMICAL RESISTANT, WATER–CLEANABLE, TILE–SETTING EPOXY – 100% SOLIDS, INDUSTRIAL–GRADE
109	CREW ROOM	QUARRY TILE (NOTE 2)	COVED QUARRY TILE	MODIFIED–PORTLAND CEMENT THIN SET MORTAR (MEDIUM BED)	CHEMICAL RESISTANT, WATER–CLEANABLE, TILE–SETTING EPOXY – 100% SOLIDS, INDUSTRIAL–GRADE
110	COOLER	QUARRY TILE (NOTE 2)	4" ALUM. COVED BASE	MODIFIED–PORTLAND CEMENT THIN SET MORTAR (MEDIUM BED)	CHEMICAL RESISTANT, WATER–CLEANABLE, TILE–SETTING EPOXY – 100% SOLIDS, INDUSTRIAL–GRADE
111	FREEZER	QUARRY TILE (NOTE 2)	4" ALUM. COVED BASE	MODIFIED–PORTLAND CEMENT THIN SET MORTAR (MEDIUM BED)	CHEMICAL RESISTANT, WATER–CLEANABLE, TILE–SETTING EPOXY – 100% SOLIDS, INDUSTRIAL–GRADE
112	COMPUTER CLOSET	QUARRY TILE (NOTE 2)	COVED QUARRY TILE	MODIFIED–PORTLAND CEMENT THIN SET MORTAR (MEDIUM BED)	CHEMICAL RESISTANT, WATER–CLEANABLE, TILE–SETTING EPOXY – 100% SOLIDS, INDUSTRIAL–GRADE
113	CREW ALCOVE	QUARRY TILE (NOTE 2)	COVED QUARRY TILE	MODIFIED–PORTLAND CEMENT THIN SET MORTAR (MEDIUM BED)	CHEMICAL RESISTANT, WATER–CLEANABLE, TILE–SETTING EPOXY – 100% SOLIDS, INDUSTRIAL–GRADE
114	JANITOR'S CLOSET	PORCELAIN FLOOR TILE (NOTE 3)	COVED QUARRY TILE	LATEX–PORTLAND CEMENT THIN SET (MEDIUM BED)	HIGH PERFORMANCE CEMENT GROUT
115	VESTIBULE	PORCELAIN FLOOR TILE (NOTE 3)	NONE – WALL TILE	LATEX–PORTLAND CEMENT THIN SET (MEDIUM BED)	HIGH PERFORMANCE CEMENT GROUT
116	PRESENTER–2	QUARRY TILE (NOTE 2)	COVED QUARRY TILE	MODIFIED–PORTLAND CEMENT THIN SET MORTAR (MEDIUM BED)	CHEMICAL RESISTANT, WATER–CLEANABLE, TILE–SETTING EPOXY – 100% SOLIDS, INDUSTRIAL–GRADE
117	CO2	N/A – SEE ROOM FINISH SCHEDULE	----	----	----

6 / A6.1 **NOT USED**
–

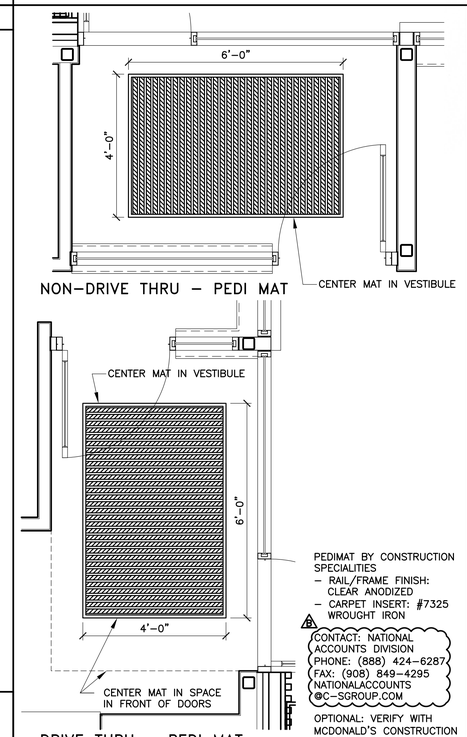

7 / A6.1 **PEDIMAT (OPTIONAL)**
1/2" =1'–0"

ROOM FINISH SCHEDULE

MARK	ROOM NAME	WALLS			CEILING *	REMARKS
		SUBSTRATE	FINISH			
100	CUSTOMER SERVICE	CEMENT BOARD	TILE **	SEE DECOR DRAWINGS, TILE AS NOTED ON A1.0	2'x2' ACOUST., PAINTED GYP. BD	VERIFY FINISHES WITH DECOR COMPANY
101	DINING	CEM BD/GYP BD	TILE/V.W.C. **	SEE DECOR DRAWINGS FOR EXTENT	2'x2' ACOUST., PAINTED GYP. BD	VERIFY FINISHES WITH DECOR COMPANY
102	WOMEN'S TOILET	CEMENT BOARD	TILE	SEE DECOR DRAWINGS FOR EXTENT	PAINTED GYP. BD.	VERIFY FINISHES WITH DECOR COMPANY
103	MEN'S TOILET	CEMENT BOARD	TILE	SEE DECOR DRAWINGS FOR EXTENT	PAINTED GYP. BD.	VERIFY FINISHES WITH DECOR COMPANY
104	SUPPORT	1/2" PLYWD (NOTE 4)	FRP	STAINLESS STEEL CORNERS	2'x2' VINYL–FACED LAY–IN	SEE NOTE 5 FOR WALL FINISH EXCEPTIONS
105	KITCHEN	1/2" PLYWD (NOTE 4)	FRP	STAINLESS STEEL CORNERS, TILE OVER CEM BD AS NOTED ON A1.0	2'x2' VINYL–FACED LAY–IN	SEE SHEET A1.0 FOR EXTENT OF CEMENT BOARD, SS OR CT
106	PRESENTER–1	CEM BD, 1/2" PLYWD (NOTE 4)	TILE	TILE AS NOTED ON A1.0	2'x2' VINYL–FACED LAY–IN	
107	ORDER	1/2" PLYWD (NOTE 4)	FRP		2'x2' VINYL–FACED LAY–IN	
108	MANAGER'S AREA	1/2" PLYWD (NOTE 4)	FRP		2'x2' VINYL–FACED LAY–IN	
109	CREW ROOM	CEM BD/GYP BD	TILE/V.W.C. **	SEE DECOR DRAWINGS FOR EXTENT	2'x2' ACOUST. LAY–IN	VERIFY FINISHES WITH DECOR COMPANY
110	COOLER	N/A	PRE–FAB METAL SKIN PANEL		PRE–FAB METAL SKIN PANEL	BASE SUPPLIED BY KES
111	FREEZER	N/A	PRE–FAB METAL SKIN PANEL		PRE–FAB METAL SKIN PANEL	BASE SUPPLIED BY KES
112	COMPUTER CLOSET	1/2" PLYWD (NOTE 4)	FRP		PAINTED GYP. BD.	
113	CREW ALCOVE	1/2" PLYWD (NOTE 4)	FRP	STAINLESS STEEL CORNERS, TILE OVER CEM BD AS NOTED ON A1.0	2'x2' VINYL–FACED LAY–IN	SEE SHEET A1.0 FOR EXTENT OF CEMENT BOARD, SS OR CT
114	JANITOR'S CLOSET	1/2" PLYWD (NOTE 4)	FRP		PAINTED GYP. BD.	EXT GRADE PLYWOOD (NOTE 4) SEE NOTE 5B
115	VESTIBULE	CEM BD/GYP BD	TILE/V.W.C. **	SEE DECOR DRAWINGS FOR EXTENT	2'x2' ACOUST. LAY–IN WITH HOLD DOWN CLIPS	OPTIONAL PEDIMAT. SEE DETAIL 7/A6.1. VERIFY WITH MCD CONSTRUCTION MANGER
116	PRESENTER–2	CEM BD, 1/2" PLYWD (NOTE 4)	TILE	TILE AS NOTED ON A1.0	2'x2' VINYL–FACED LAY–IN	
117	CO2	1/2" PLYWD (NOTE 4)	FRP		PAINTED GYP. BD.	EXT GRADE PLYWOOD (NOTE 4) SEE NOTE 7

GENERAL FINISH NOTES:

1. ALL FINISH SURFACES OF WALL AND CEILING MATERIALS SHALL BE CLASS B AND SHALL HAVE A FLAME SPREAD RATING OF 26 TO 75 AND A SMOKE DENSITY OF 450 MAX. (PER IBC TABLE 803.9).
2. DECORATIVE MATERIALS SHALL BE FLAME RETARDANT AND MEET THE CRITERIA OF NFPA 701.
3. DECORATIVE MATERIAL SHALL NOT CONCEAL EXITS, EXIT LIGHTS, ALARM STATIONS, HOSE CABINETS, AND EXTINGUISHER LOCATIONS
4. WHEN BUILDING TYPE IS A NON–COMBUSTIBLE CATEGORY, ALL PLYWOOD SHALL BE FIRE RETARDANT TREATED.
5. A. FRP OVER CEMENT BD BEHIND 3–COMP SINK TO HGT OF BACK SPLASH
   B. TILE WAINSCOT TO 6' A.F.F. OVER CEMENT BD. OVER EXT GRADE PLYWOOD (NOTE 4) AT MOP SINKS
6. PROVIDE CEMENT BOARD BACKER OR EQUIVALENT AT ALL TILE LOCATIONS.
7. PROVIDE VAPOR BARRIER BEHIND PLYWOOD AT WALLS AND BEHIND GYP. AT CEILING

* SEE CEILING PLAN FOR HEIGHTS & LAYOUTS

** VWC ON EXTERIOR WALL ASSEMBLIES TO BE PERFORATED

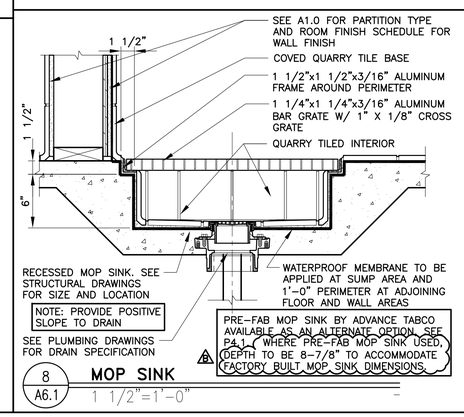

8 / A6.1 **MOP SINK**
1 1/2"=1'–0"

REV	DATE	DESCRIPTION	BY
.	.	.	.
.	.	.	.
B	12/03/20	SERVICE AREA OPTIMIZATION	DIA
.	11/13/20	USRD SAO SET REVIEW	DIA
A	05/05/20	CIVIL & PLAN REVIEW COMMENTS	DIA
.	01/23/20	PERMIT SET	DIA
.	01/13/20	USRD PROGRESS SET REVIEW	DIA

I hereby certify that this plan, specification or report was prepared by me or under my direct supervision and that I am a duly registered ARCHITECT under the laws of the State of Kansas.

Signature
12/03/20
Date
Registration Number

PREPARED BY:
reprise DESIGN
Architecture, Inc.
ARCHITECTURE & PLANNING
12400 PORTLAND AVENUE SOUTH, SUITE 100
BURNSVILLE, MN 55337
EMAIL: DATA@REPRISEDESIGN.COM
PHONE: (952) 252–4042
FAX: (952) 252–4043

PREPARED FOR:
McDonald's USA, LLC

©2020 McDonald's USA, LLC
These drawings and specifications are the confidential and proprietary property of McDonald's USA, LLC and shall not be copied or reproduced without written authorization. The contract documents were prepared for use on this specific site in Burnsville, MN. Any modifications required for use on a different site or at a later time. Use of these drawings for reference or example on another project requires the services of a licensed design professional to ensure that the contract documents for reuse on another project is not authorized.

DRAWN BY: DIA
STD ISSUE DATE: 2019_11
REVIEWED BY: KD
DATE ISSUED: 01/23/20
RO#19175

TITLE: 2019 STANDARD BUILDING – BB20
4597F10–WOOD/WOOD

DESCRIPTION:
WOOD BEARING WALLS W/FIBER CEMENT SIDING & CI
WOOD ROOF TRUSS FRAMING
FIBER CEMENT PANEL/BATTEN/ALPOLIC PANEL/BRICK EXT. FINISH

SITE ID: 015–0071
SITE ADDRESS: 605 SOUTH 7TH STREET, KANSAS CITY, KS

SHEET NO.
015–0071.00.B
A6.1
FINISH SCHEDULES

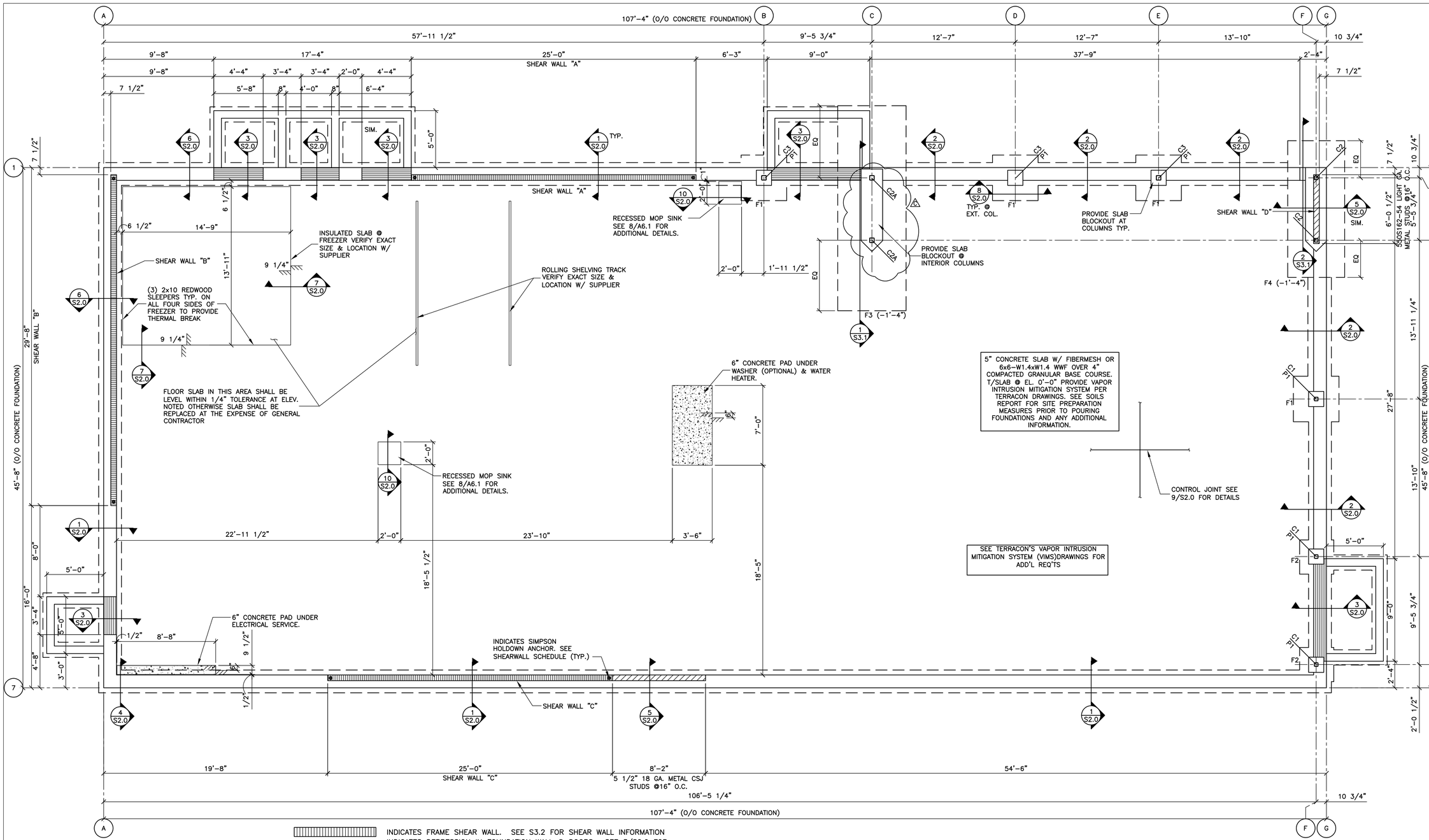

INDICATES FRAME SHEAR WALL. SEE S3.2 FOR SHEAR WALL INFORMATION

INDICATES DEPRESSION IN FOUNDATION WALL @ DOORS. SEE 3/S2.0 FOR THRESHOLD DETAIL.

INDICATES METAL STUD FRAME WALL

1/S1.0 FOUNDATION PLAN

1/4"=1'-0"

NOTES:

1. TOP OF FOOTING @ EL. (-2'-6") UNLESS NOTED OTHERWISE.
2. TOP OF PIER @ EL. (-0'-8") UNLESS NOTED OTHERWISE.
3. SEE SHEET S4.0 FOR GENERAL STRUCTURAL NOTES.
4. PROVIDE POSITIVE DRAINAGE TO ALL FLOOR DRAINS/SINKS (MIN 6") BEYOND DRAIN) SEE PLUMBING DRAWINGS FOR EXACT LOCATIONS
5. SEE SHEET S2.0 FOR TYPICAL CORNER BAR DETAILS.
6. MINIMUM REQUIREMENTS FOR SILL PLATE CONNECTION TO FOUNDATION:
   MINIMUM # OF BOLTS = 2 PER PIECE OF SILL
   MAXIMUM DISTANCE FROM END OF SILL TO ANCHOR = 12"
   MINIMUM DISTANCE FROM END OF SILL TO ANCHOR = 4"
7. WHERE SILL PLATES ARE NOT CONTINUOUS AT ALL LOCATIONS EXCEPT SHEAR WALLS, USE SIMPSON "RPS22Z" TIE FOR NOTCH < 5 1/2", USE SIMPSON "RPS28Z" FOR NOTCH < 12", W/ 16d NAILS INTO SILL PLATE ENDS. (MAX. SPACING BETWEEN STUDS = 16" O.C.)
8. WHERE SILL PLATES ARE NOT CONTINUOUS AT SHEAR WALLS, CONTACT ENGINEER OF RECORD FOR RESPONSE.

SEE TERRACON'S VAPOR INTRUSION MITIGATION SYSTEM (VIMS)DRAWINGS FOR ADD'L REQ'TS

FOOTING SCHEDULE

MARK	SIZE	REINFORCING
F1	4'-0"x4'-0"x1'-0"	5-#5 E.W.-B.
F2	3'-0"x3'-0"x1'-0"	4-#5 E.W.-B.
F3	6'-0"x16'-0"x3'-0"	7-#7 L.W.-T&B #6 @ 12" O.C. S.W.-T&B
F4	5'-0"x12'-0"x3'-0"	6-#7 L.W.-T&B #6 @ 12" O.C. S.W.-T&B

PIER SCHEDULE

MARK	SIZE	REINFORCING	REMARKS
P1	1'-4"x1'-4"	4-#6 VERT. #4 TIES @ 12" O.C.	SEE DETAIL 8/S2.0

COLUMN & BASE PLATE SCHEDULE

MARK	MEMBER	SHAPE	BASE PLATE	REMARKS
C1	HSS4x4x3/8	⊕	A	EXTEND TO ROOF
C2	HSS4x4x3/8	⊕	B	BRACED FRAME △1
C2A	HSS5x5x3/8	⊕	B	BRACED FRAME
C3	HSS5x5x3/8	⊕	A	EXTEND TO ROOF

NOTE: SEE DETAIL 3/S3.1 FOR BASE PLATE AND ANCHOR ROD DETAILS

REV	DATE	DESCRIPTION	BY
C	02/22/21	REV. C - STRUCTURAL	
B	12/03/20	SERVICE AREA OPTIMIZATION	
	1/23/20	PERMIT	
	1/13/20	USRO REVIEW SET	

LICENSED PROFESSIONAL ENGINEER — JUSTIN W. VOIGT — KANSAS — 02/22/21

PREPARED BY:
VOIGT & ASSOCIATES, INC.
STRUCTURAL ENGINEERING SERVICES
4635 NICOLS RD.
EDINA, MINNESOTA 55122
PHONE (651) 686-7323
FAX (651) 686-0444

PREPARED FOR:
McDonald's USA, LLC

© 2020 McDonald's USA, LLC
These drawings and specifications are the confidential and proprietary property of McDonald's USA, LLC and shall not be copied or reproduced without written authorization. The contract documents were prepared for use on this site only and under the supervision of the architect named in the contract documents for reuse on another project is not authorized. These drawings for reference or example on another project requires the approval of McDonald's USA, LLC and proper adaptation to the requirements of the contract documents for reuse on another project is not authorized.

DRAWN BY CRB | STD ISSUE DATE 2019_11 | REVIEWED BY AWM | DATE ISSUED 12/03/20 | VA# M20-001

TITLE: 2019 STANDARD BUILDING - BB20
4597F10-WOOD/WOOD
DESCRIPTION: WOOD BEARING WALLS W/FIBER CEMENT SIDING & CI
WOOD ROOF TRUSS FRAMING
FIBER CEMENT PANEL/BATTEN/ALPOLIC PANEL/BRICK EXT. FINISH
SITE ID 015-0071 | SITE ADDRESS 605 SOUTH 7TH STREET, KANSAS CITY, KS

SHEET NO. 015-0071.00.0
S1.0
FOUNDATION PLAN

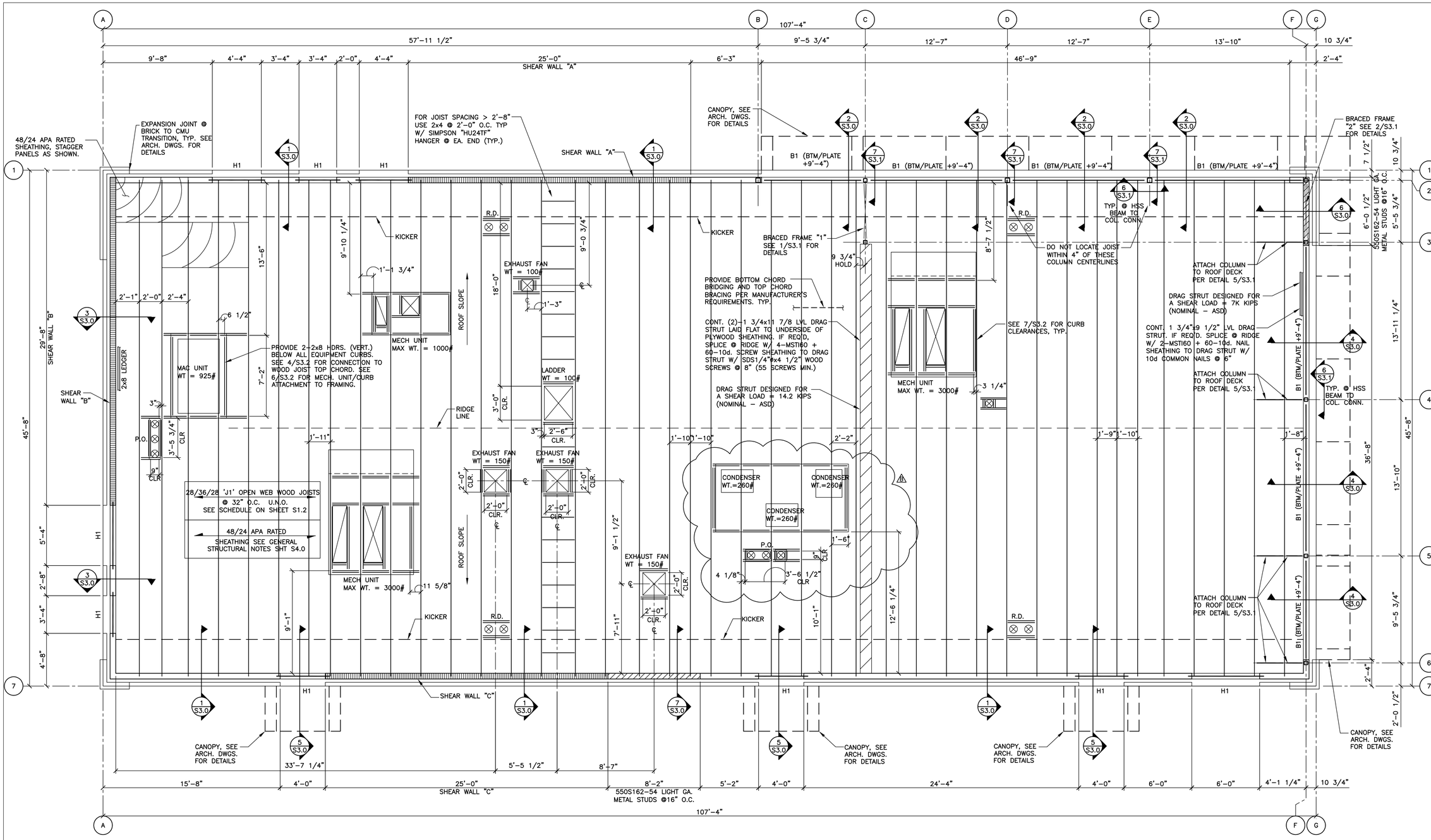

1 S1.2 FRAMING PLAN

1/4"=1'-0"

INDICATES METAL STUD FRAME WALL

NOTES:

1. SEE SHEET S4.0 FOR GENERAL STRUCTURAL NOTES.
2. R.D.: ROOF DRAINS
3. P.O.: ROOF CURB PORTAL OPENING – COORDINATE WITH MECHANICAL DRAWINGS.
4. WHEN TOP PLATES ARE NOT CONTINUOUS, USE SIMPSON "RPS22" TIE FOR NOTCH < 5 1/2", USE SIMPSON "RPS28" TIES FOR NOTCH < 12", W/ 16d NAILS INTO TOP PLATE ENDS. (MAX. SPACING BETWEEN STUDS = 16" O.C.)
5. TOP PLATE SPLICE SHALL BE MINIMUM LENGTH OF 48" WITH 2 ROWS (2 1/2" APART) OF 6-16d COMMON NAILS SPACED @ 2" ON CENTER (12 TOTAL).
6. SEE 2/S4.0 FOR VENEER TIES REQUIREMENTS.
7. SEE 5/S3.2 FOR SNOW DRIFT DIAGRAM.

BEAM SCHEDULE

MARK	MEMBER	SHAPE	SUPPORT	REMARKS
B1	HSS16x4x1/4 LLV + 5/16" PLATE	⊓	1/2" END PLATE	SEE DETAIL 6/S3.1

HEADER SCHEDULE

MARK	MEMBER	SHAPE	BEARING
H1	5 1/4"x9 1/2" LVL + L5x3 1/2x5/16 LLV	⊠L	SEE DETAIL 2/S3.2 6" @ BRG. ANGLE

JOIST SCHEDULE

MARK	LIVE/ROOF SNOW LOAD	DEPTH	MANUFACTURER & SERIES
J1	20/20	28"/36"/28"	REDBUILT "RED-S"

NOTE: SEE DETAIL 4/S3.2 FOR JOIST DETAILS AND SUPPLIER INFORMATION

REV	DATE	DESCRIPTION	BY
B	12/03/20	SERVICE AREA OPTIMIZATION	
	1/23/20	PERMIT	
	1/13/20	USRD REVIEW SET	

PREPARED BY:

VOIGT & ASSOCIATES, INC.
STRUCTURAL ENGINEERING SERVICES
4655 NICOLS RD.
EAGAN, MINNESOTA 55122
(651) 686-5272
(651) 686-5444
FAX

PREPARED FOR:

McDonald's USA, LLC

© 2020 McDonald's USA, LLC

These drawings and specifications are the confidential and proprietary property of McDonald's USA, LLC and shall not be copied or reproduced without written consent. The contract documents were prepared for use on this specific site in conjunction with its issue date and are not suitable for use on a different site or at a later time. Use of these documents by other parties or extensions of the services of properly licensed architects and engineers. Reproduction of the contract documents for reuse on another project is not authorized.

DRAWN BY CRB | STD. ISSUE DATE 2019_11 | REVIEWED BY AWM | DATE ISSUED 12/03/20 | V&# M20-031

TITLE: 2019 STANDARD BUILDING – BB20 4597F10-WOOD/WOOD

DESCRIPTION: WOOD BEARING WALLS W/FIBER CEMENT SIDING & CI WOOD ROOF TRUSS FRAMING FIBER CEMENT PANEL/BATTEN/ALPOLIC PANEL/BRICK EXT. FINISH

SITE ADDRESS: 605 SOUTH 7TH STREET, KANSAS CITY, KS

SITE ID: 015-0071

SHEET NO. 015-0071.00.0

S1.2

FRAMING PLAN

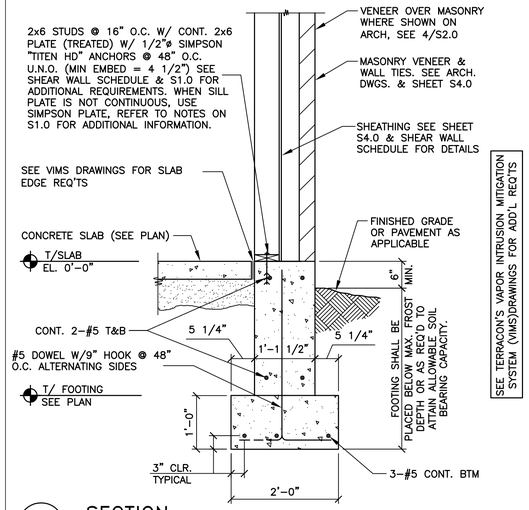

1 S2.0 SECTION
3/4" = 1'-0"

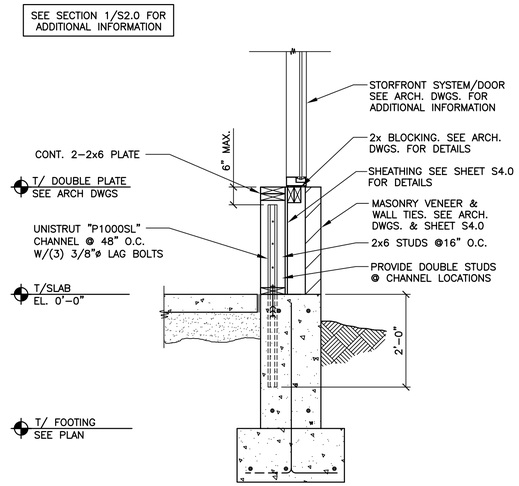

2 S2.0 SECTION
3/4" = 1'-0"

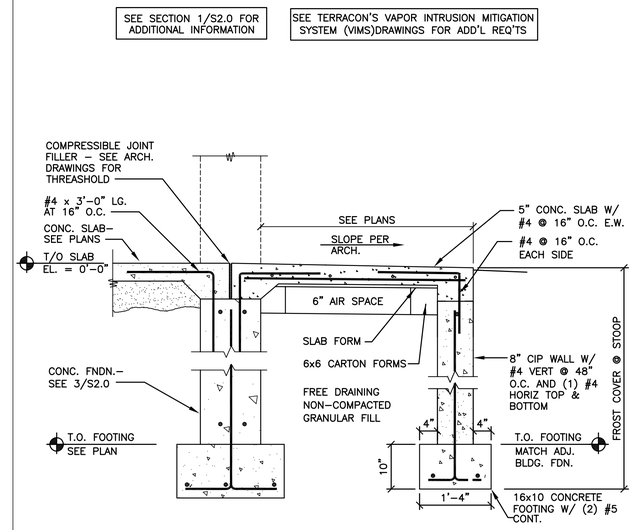

3 S2.0 SECTION
3/4" = 1'-0"

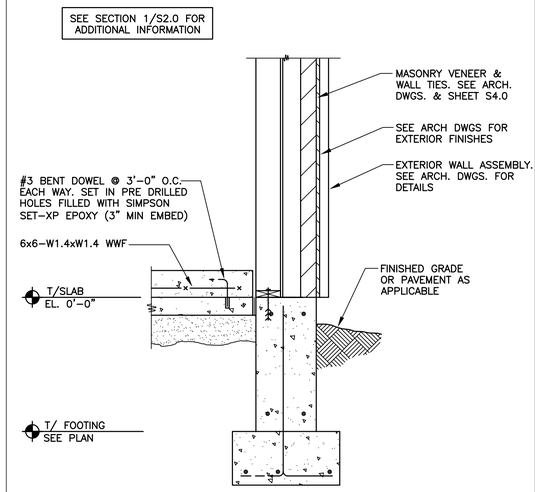

4 S2.0 SECTION
3/4" = 1'-0"

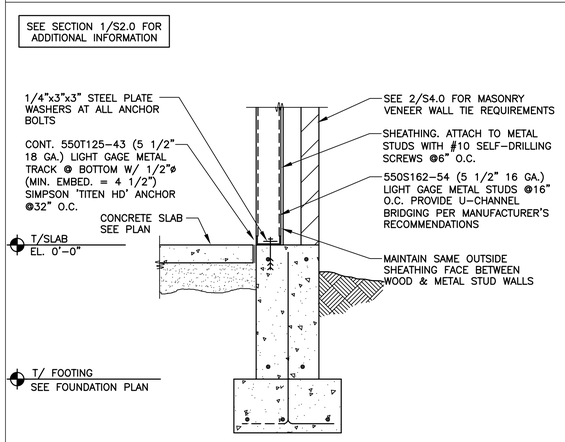

5 S2.0 SECTION
3/4" = 1'-0"

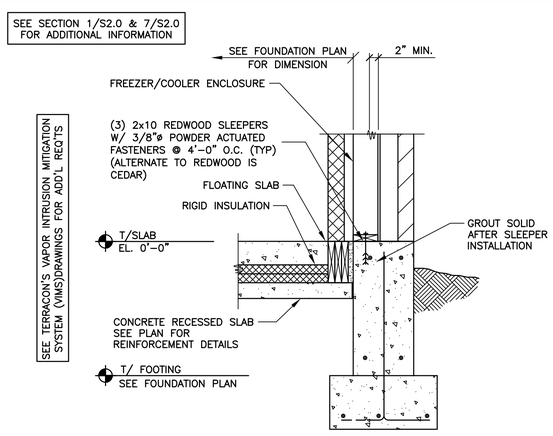

6 S2.0 SECTION
3/4" = 1'-0"

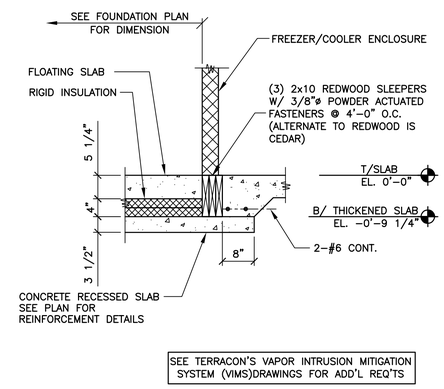

7 S2.0 SECTION
3/4" = 1'-0"

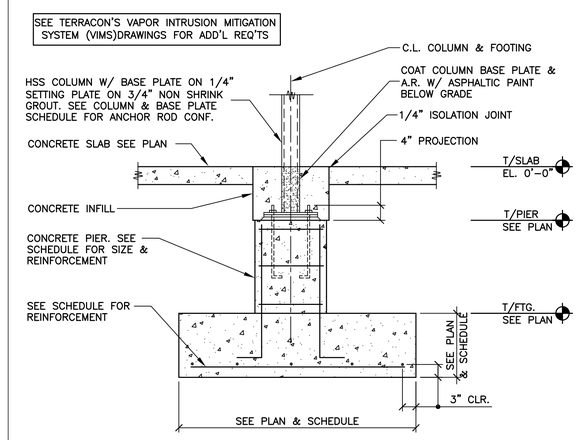

8 S2.0 ISOLATED COLUMN FOOTING DETAIL
3/4" = 1'-0"

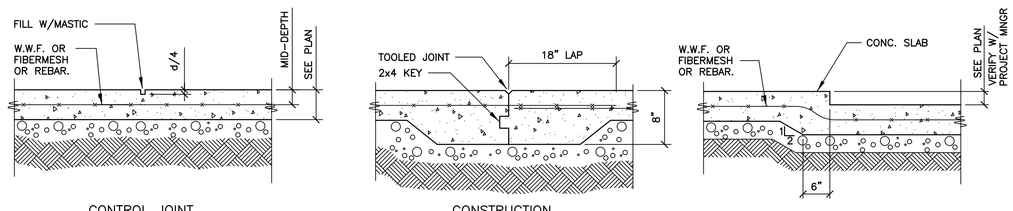

CONTROL JOINTS SHALL BE IN A SQUARE PATTERN OF 400 SQ. FT. AND/OR THE LENGTH SHALL NOT BE MORE THAN 2x WIDTH. ALIGN WITH COLUMN CENTER LINES.

SEE TERRACON'S VAPOR INTRUSION MITIGATION SYSTEM (VIMS)DRAWINGS FOR ADD'L REQ'TS

9 S2.0 SLAB ON GRADE DETAILS
N.T.S.

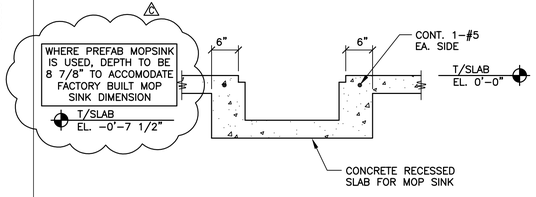

SEE TERRACON'S VAPOR INTRUSION MITIGATION SYSTEM (VIMS)DRAWINGS FOR ADD'L REQ'TS

10 S2.0 RECESSED SLAB DETAIL
3/4" = 1'-0"

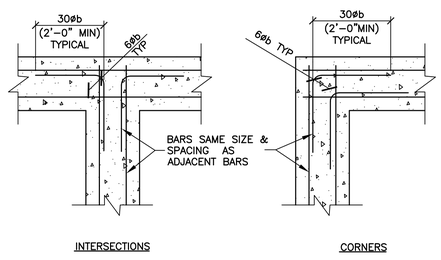

11 S2.0 CORNER BAR DETAILS
N.T.S.

REV	DATE	DESCRIPTION	BY
C	02/22/21	REV. C - STRUCTURAL	
B	12/03/20	SERVICE AREA OPTIMIZATION	
	1/23/20	PERMIT	
	1/13/20	USRO REVIEW SET	

PAUL W. VOIGT LICENSED PROFESSIONAL ENGINEER KANSAS 02/22/21

PREPARED BY:
VOIGT & ASSOCIATES, INC.
STRUCTURAL ENGINEERING SERVICES
4835 NICOLS RD.
EDEN PRAIRIE, MINNESOTA 55122
PHONE (651) 686-7223
FAX (651) 686-0444

PREPARED FOR:
McDonald's USA, LLC

© 2020 McDonald's USA, LLC
These drawings and specifications are the confidential and proprietary property of McDonald's USA, LLC and shall not be copied or reproduced without written authorization. The contract documents were prepared for use on this specific project in conjunction with this site plan and are not suitable for use on a different site or at a later time. Use of these drawings for reference or example on another project requires the express written consent of McDonald's USA, LLC. Reproduction of the contract documents for reuse on another project is not authorized.

DRAWN BY CRB | STD ISSUE DATE 2019_11 | REVIEWED BY AWM | DATE ISSUED 12/03/20 | VA# M20-001

TITLE 2019 STANDARD BUILDING - BB20 4597F10-WOOD/WOOD
DESCRIPTION WOOD BEARING WALLS W/FIBER CEMENT SIDING & CI WOOD ROOF TRUSS FRAMING FIBER CEMENT PANEL/BATTEN/ALPOLIC PANEL/BRICK EXT. FINISH
SITE ID 015-0071 | SITE ADDRESS 605 SOUTH 7TH STREET, KANSAS CITY, KS

SHEET NO. 015-0071.00.0 S2.0
FOUNDATION SECTIONS

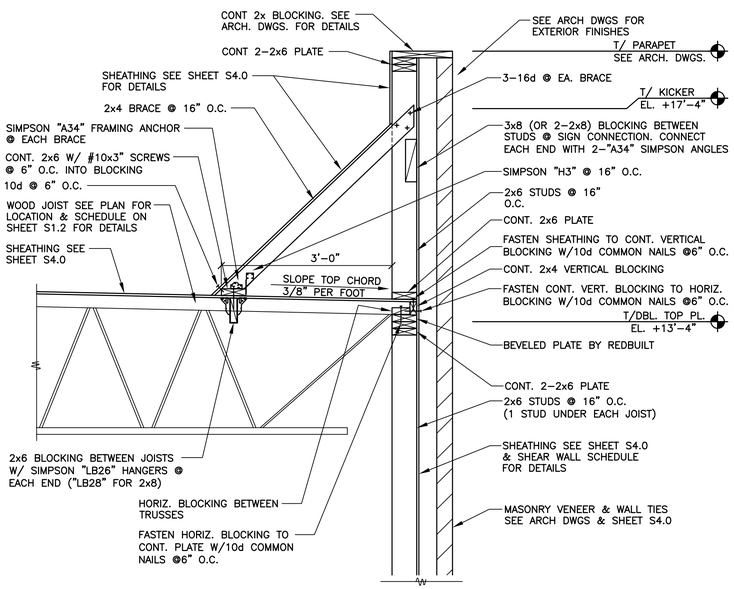

1 S3.0 SECTION
3/4" = 1'-0"

SEE SECTION 1/S3.0 FOR ADDITIONAL INFORMATION

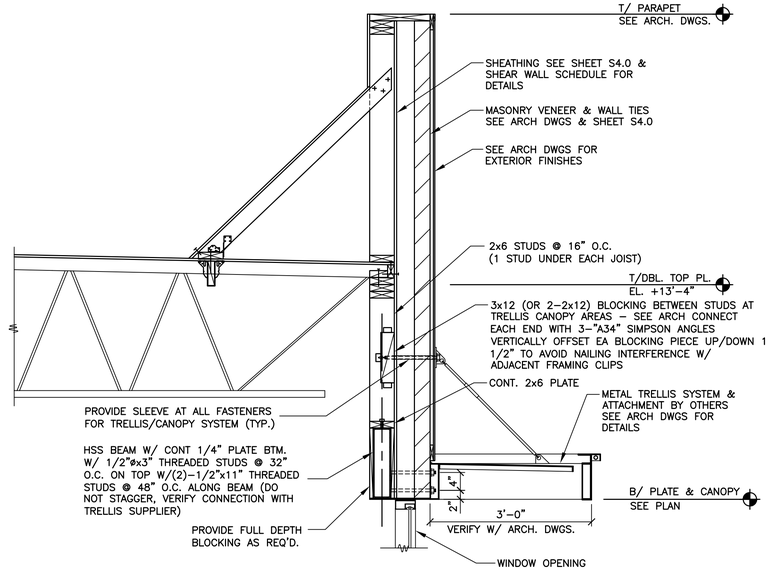

2 S3.0 SECTION
3/4" = 1'-0"

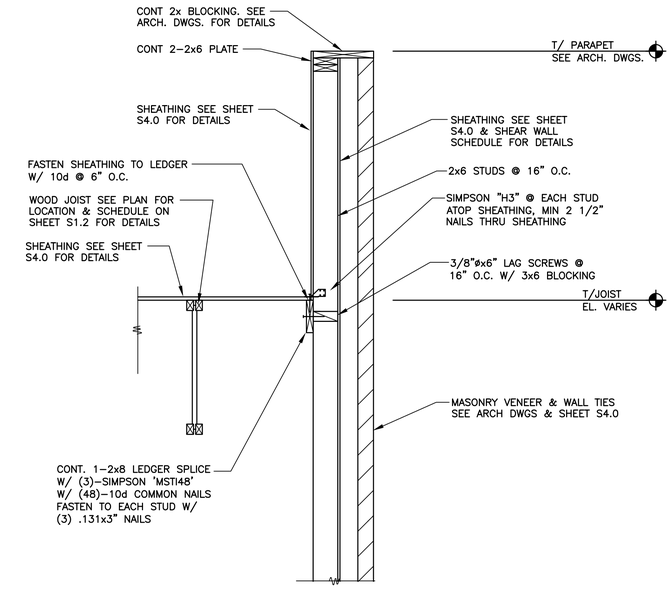

3 S3.0 SECTION
3/4" = 1'-0"

SEE SECTION 2/S3.0 & 3/S3.0 FOR ADDITIONAL INFORMATION

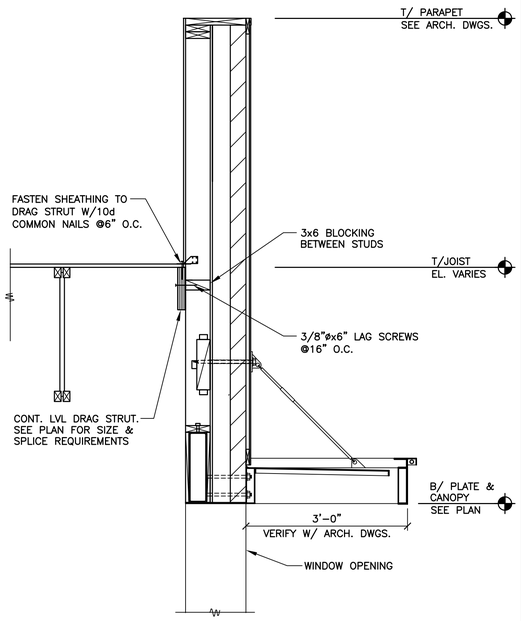

4 S3.0 SECTION
3/4" = 1'-0"

SEE SECTION 1/S3.0 FOR ADDITIONAL INFORMATION

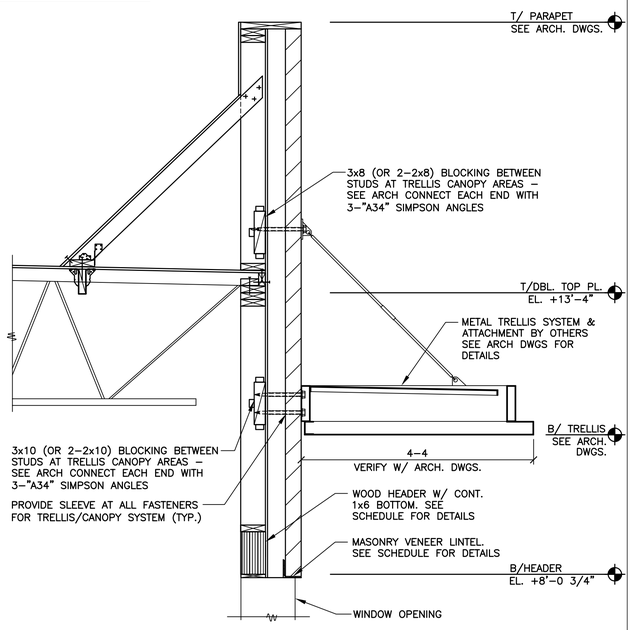

5 S3.0 SECTION
3/4" = 1'-0"

SEE SECTION 4/S3.0 FOR ADDITIONAL INFORMATION

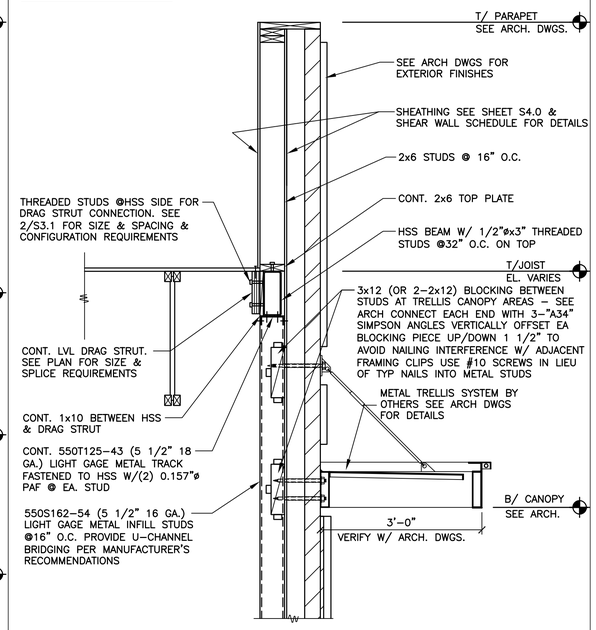

6 S3.0 SECTION
3/4" = 1'-0"

SEE SECTION 1/S3.0 FOR ADDITIONAL INFORMATION

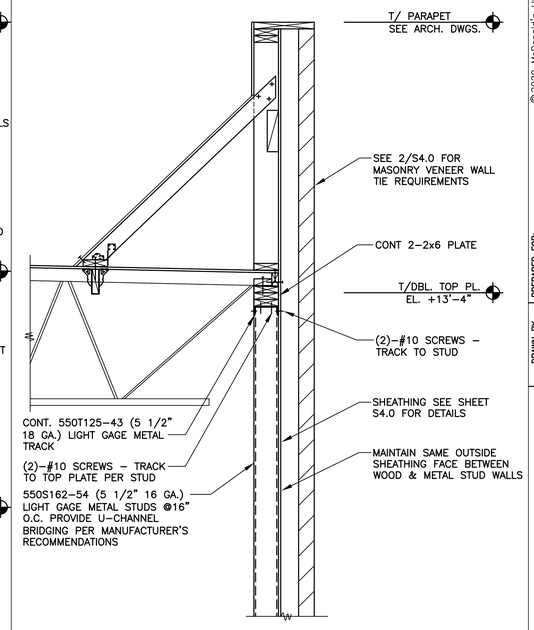

7 S3.0 SECTION
3/4" = 1'-0"

REV	DATE	DESCRIPTION	BY
.	.	.	.
.	.	.	.
.	.	.	.
.	.	.	.
.	.	.	.
.	1/23/20	PERMIT	.
.	1/13/20	USRD REVIEW SET	.

PREPARED BY:
VOIGT & ASSOCIATES, INC.
STRUCTURAL ENGINEERING SERVICES
4635 NICOLS RD.
EDEN PRAIRIE, MINNESOTA 55122
PHONE (651) 686-7227
FAX (651) 686-0444

1/23/20

PREPARED FOR:
McDonald's USA, LLC

© 2020 McDonald's USA, LLC
These drawings and specifications are the confidential and proprietary property of McDonald's USA, LLC and shall not be copied or reproduced without written authorization. The contract documents were prepared in conjunction with the project specified herein. They are not suitable for use on a different site or at a later time. Use of these drawings for reference or example on another project requires the express written consent of McDonald's Properties of Kansas. Reproduction of the contract documents for reuse on another project is not authorized.

DRAWN BY CRB
STD ISSUE DATE 2019_11
REVIEWED BY AWM
DATE ISSUED 1/23/20
VA# M20-001

TITLE 2019 STANDARD BUILDING - BB20 459/F10-WOOD/WOOD
DESCRIPTION
WOOD BEARING WALLS W/FIBER CEMENT SIDING & CI
WOOD ROOF TRUSS FRAMING
FIBER CEMENT PANEL/BATTEN/ALPOLIC PANEL/BRICK EXT. FINISH
SITE ID 015-0071
SITE ADDRESS 605 SOUTH 7TH STREET, KANSAS CITY, KS

SHEET NO. 015-0071.00.0
S3.0
FRAMING SECTIONS

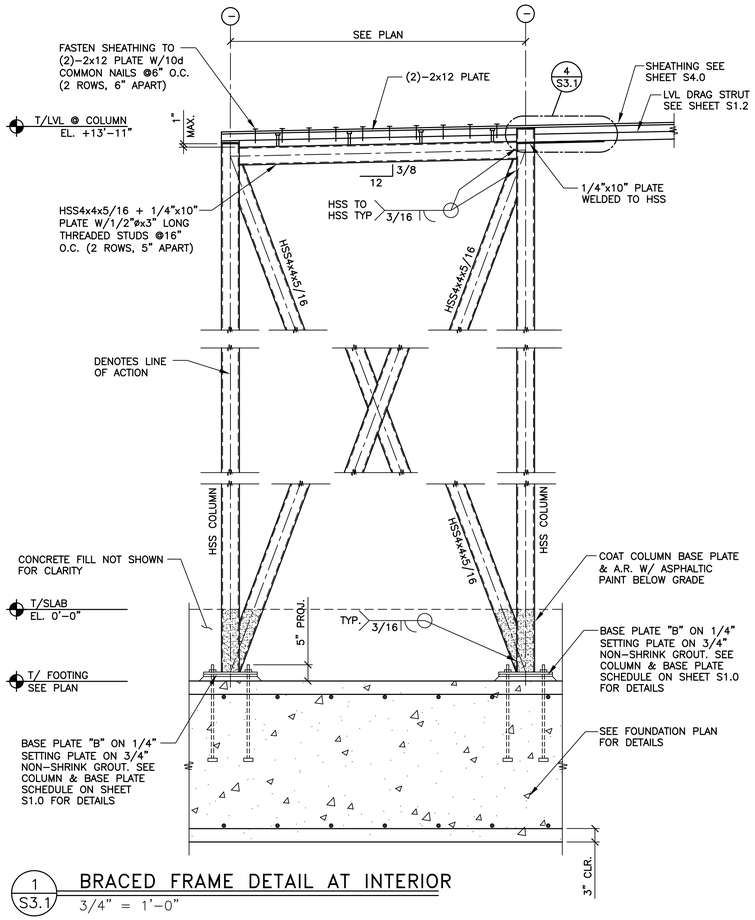

1 S3.1 BRACED FRAME DETAIL AT INTERIOR

3/4" = 1'-0"

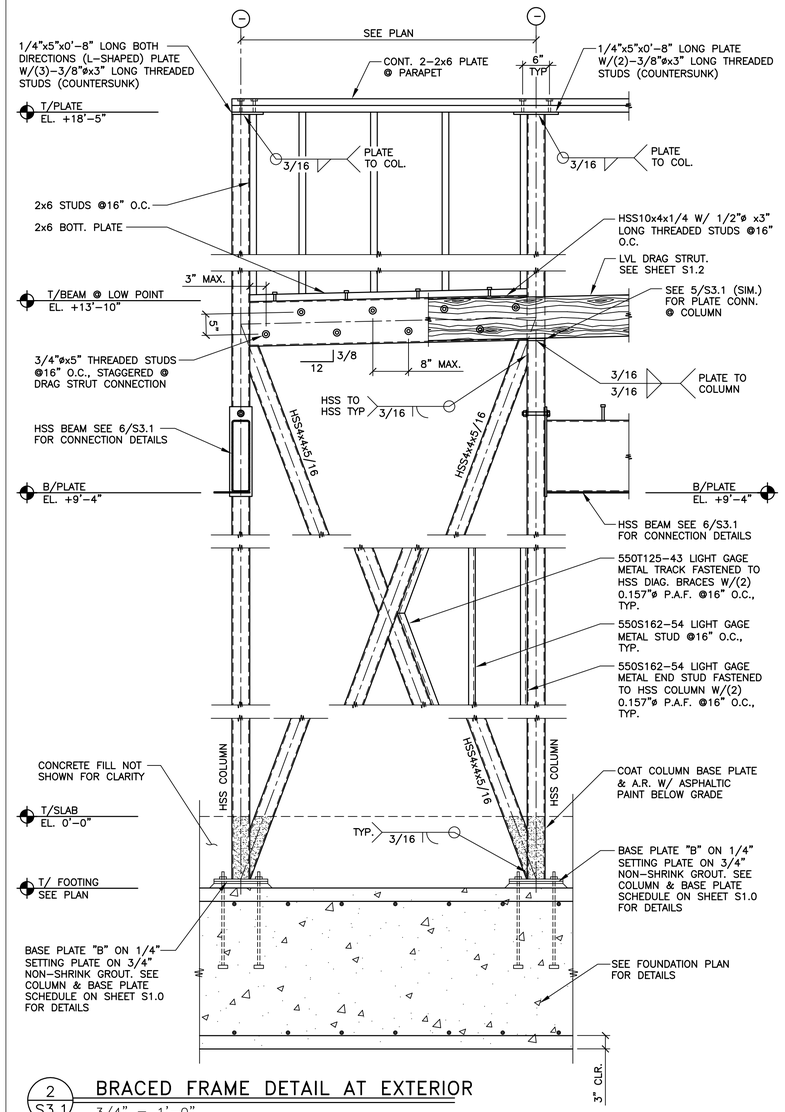

2 S3.1 BRACED FRAME DETAIL AT EXTERIOR

3/4" = 1'-0"

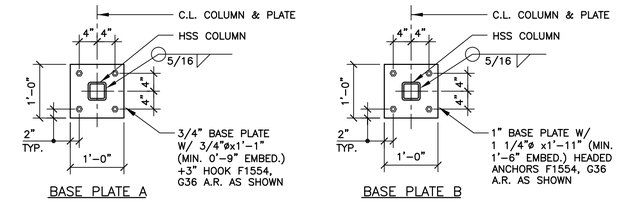

3 S3.1 BASE PLATE DETAILS

N.T.S.

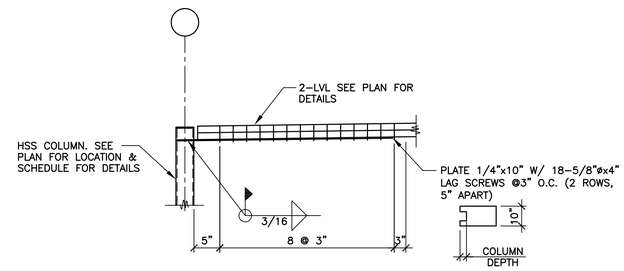

4 S3.1 DRAG STRUT CONNECTION DETAIL

3/4" = 1'-0"

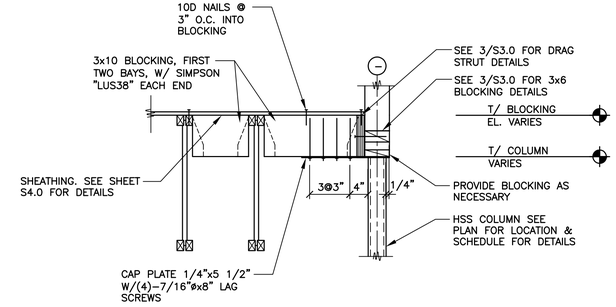

5 S3.1 COLUMN BRACING DETAIL

3/4" = 1'-0"

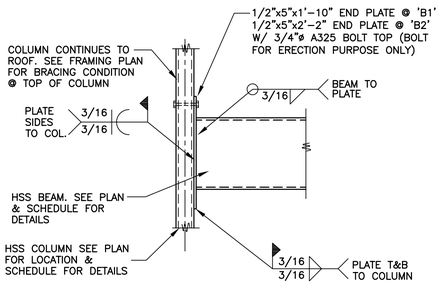

6 S3.1 HSS BEAM CONNECTION DETAIL

3/4" = 1'-0"

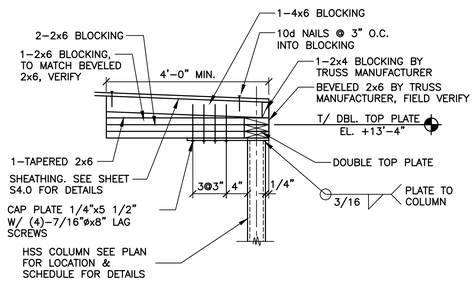

7 S3.1 COLUMN BRACING DETAIL

3/4" = 1'-0"

8 S3.1 NOT USED

3/4" = 1'-0"

9 S3.1 NOT USED

3/4" = 1'-0"

REV	DATE	DESCRIPTION	BY
.	.	.	.
.	.	.	.
.	.	.	.
.	.	.	.
.	.	.	.
.	.	.	.
.	1/23/20	PERMIT	.
.	1/13/20	USRD REVIEW SET	.

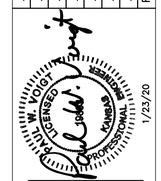

PREPARED BY:
VOIGT & ASSOCIATES, INC.
STRUCTURAL ENGINEERING SERVICES
4835 NICOLS RD.
EDINA, MINNESOTA 55122
PHONE (651) 686-7227
FAX (651) 686-0444

PREPARED FOR:
McDonald's USA, LLC

© 2020 McDonald's USA, LLC

These drawings and specifications are the confidential and proprietary property of McDonald's USA, LLC and shall not be copied or reproduced without written authorization. The contract documents were prepared for use on this specific site and project. Any other use or reuse is not suitable for use on a different site or at a later time. Use of these drawings for reference or example on another project requires the express written consent of McDonald's USA, LLC. Any other use of the contract documents for reuse on another project is not authorized.

DRAWN BY	CRB
STD ISSUE DATE	2019_11
REVIEWED BY	AWM
DATE ISSUED	1/23/20
VA#	M20-001

TITLE: 2019 STANDARD BUILDING - BB20 4597F10-WOOD/WOOD

DESCRIPTION: WOOD BEARING WALLS W/FIBER CEMENT SIDING & CI WOOD ROOF TRUSS FRAMING FIBER CEMENT PANEL/BATTEN/ALPOLIC PANEL/BRICK EXT. FINISH

SITE ID: 015-0071

SITE ADDRESS: 605 SOUTH 7TH STREET, KANSAS CITY, KS

SHEET NO. 015-0071.00.0 S3.1

STEEL DETAILS

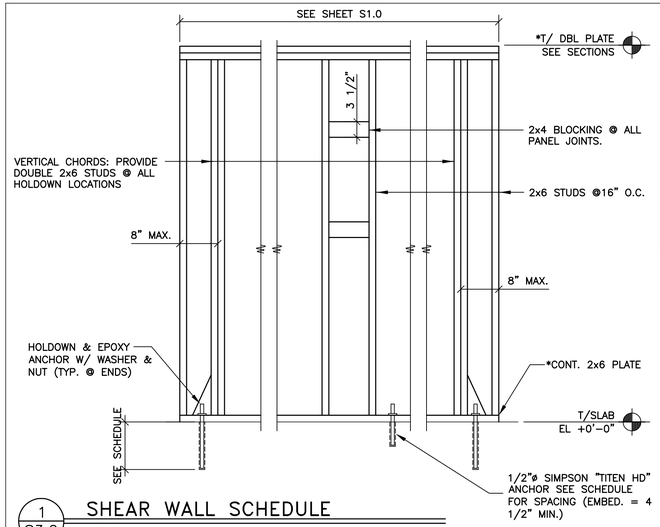

SHEAR WALL SCHEDULE

WIND: 115 MPH (EXPOSURE C) SEISMIC: Sds = 11.8%, Sd1 = 10.1%

MARK	SHEATHING	SHEATHING NAIL SIZE	SHEATHING NAIL** SPACING @ PANEL EDGES	HOLDDOWN*** ANCHORS	ANCHOR BOLT SPACING	REMARKS
A	1-15/32"	8d	6"	1-HDU8-SDS2.5 7/8"ø EPOXY ANCH.	32"	15" MIN. EMBED. ON HOLDDOWN ANCHORS.
B	1-15/32"	8d	6"	1-HDU8-SDS2.5 7/8"ø EPOXY ANCH.	32"	15" MIN. EMBED. ON HOLDDOWN ANCHORS.
C	1-15/32"	8d	6"	1-HDU8-SDS2.5 7/8"ø EPOXY ANCH.	32"	15" MIN. EMBED. ON HOLDDOWN ANCHORS.

NOTES:
1. SHEATHING PANELS MAY BE LAID UP HORIZONTALLY OR VERTICALLY. NO VERTICAL PANEL EDGES ON VERTICAL CHORDS (HOLDDOWN LOCATION).
2. WIND LOADS GOVERN OVER SEISMIC LOADS UNLESS AS NOTED IN THE REMARKS COLUMN.
3. NAIL ALL SHEATHING TO INTERMEDIATE SUPPORTS @ 12" O.C.
4. SCREW HOLDOWN ANCHORS TO VERTICAL MEMBER W/ 20-"SDS1/4"øx2 1/2" SCREWS EACH

* IF SILL PLATE OR TOP PLATES ARE NOT CONTINUOUS, CONTACT THE ENGINEER OF RECORD FOR SOLUTION.
** NAIL SHEATHING TO ROOF DIAPHRAGM CHORD & TO EACH MEMBER/WALL VERTICAL CHORD W/ 10d COMMON NAILS @ 6" O.C., UNO.
*** AS MANUF. BY SIMPSON. USE SET HIGH STRENGTH EPOXY FOR THE INSTALLATION OF END THREADED ROD ANCHORS.

1 / S3.2 SHEAR WALL SCHEDULE
N.T.S.

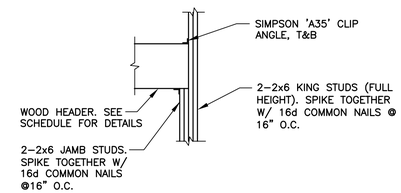

2 / S3.2 HEADER SUPPORT DETAIL
N.T.S.

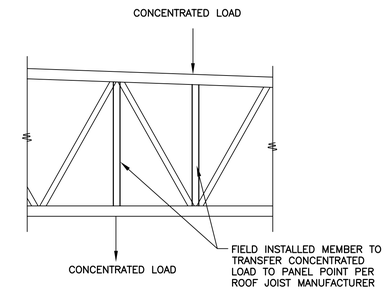

3 / S3.2 JOIST DETAIL @ POINT LOADS
N.T.S.

1. FOR NATIONAL ACCOUNT PACKAGE & PRICING CONTACT REDBUILT @ 1-866-859-6757
2. JOIST MFGR. TO VERIFY SIZE AT HVAC ROOF TOP UNITS.

HEADER	HANGER
2x6	LUS26
2-2x6	LUS26-2
2x8	LUS28
2-2x8	LUS28-2
2x10	LUS210
2-2x10	LUS210-2

FOR OPENINGS < 1'-4" USE 1-2x6
FOR OPENINGS > 1'-4" AND < 4'-0" USE 2-2x8
FOR OPENINGS > 4'-0" AND < 6'-0" USE 2-2x10

3. ALL JOISTS SHALL BE DESIGNED FOR THE FOLLOWING NET UPLIFT.
115 MPH 3 SEC GUST - EXPOSURE C, UNFACTORED
ASCE 7-10 LOADS
WIND UPLIFT:
INTERIOR = 26.4 PSF ULTIMATE
PERIMETER = 31.4 PSF (ULTIMATE WITHIN 5 FT. OF OUTSIDE WALLS)
DEAD LOAD RESISTANCE = 8 PSF

4 / S3.2 JOIST NOTES
N.T.S.

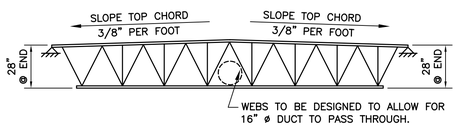

JOIST J1 PROFILE

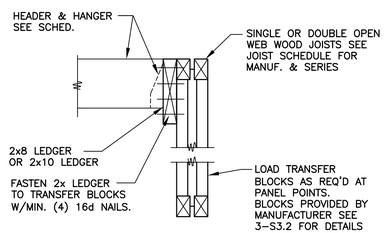

LOAD TRANSFER BLOCKS
CONCENTRATED LOADS

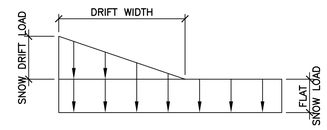

DRIFT	SNOW DRIFT LOAD (PSF)	WIDTH (FT)
SHORT DIRECTION	26	6.1
LONG DIRECTION	41	9.8

NOTE: SNOW DRIFT LOADS BASED ON NOMINAL, UNFACTORED GROUND SNOW LOADS. SEE SHEET S4.0 FOR ADDITIONAL INFORMATION.

5 / S3.2 SNOW DRIFT DIAGRAM/SCHEDULE
N.T.S

6 / S3.2 NOT USED
3/4" = 1'-0"

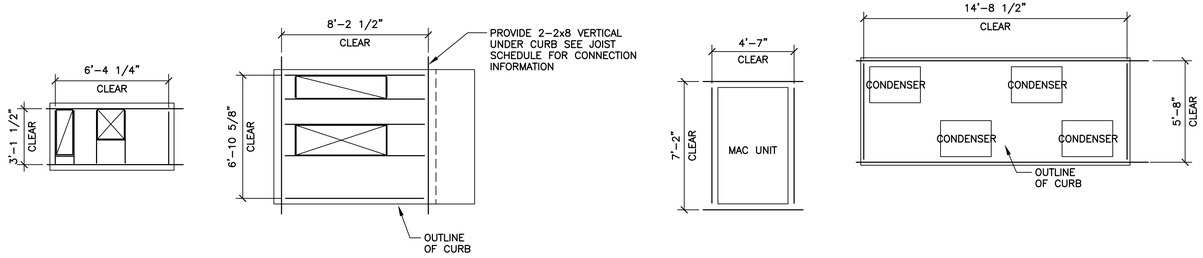

7 / S3.2 ROOF TOP UNIT CLEARANCES
1/4" = 1'-0"

8 / S3.2 NOT USED
N.T.S.

9 / S3.2 NOT USED
N.T.S.

REV	DATE	DESCRIPTION	BY
	1/23/20	PERMIT	
	1/13/20	USRD REVIEW SET	

PAUL W. VOIGT LICENSED PROFESSIONAL ENGINEER KANSAS 1/23/20

PREPARED BY:
VOIGT & ASSOCIATES, INC.
STRUCTURAL ENGINEERING SERVICES
4635 NICOLS RD.
EDINA, MINNESOTA 55122
PHONE (651) 686-7227
FAX (651) 686-0444

PREPARED FOR:
McDonald's USA, LLC

© 2020 McDonald's USA, LLC
These drawings and specifications are the confidential and proprietary property of McDonald's USA, LLC and shall not be copied or reproduced without written authorization. The contract documents were prepared for use on this specific site in conjunction with this project and are not suitable for use on a different site or at a later time. Use of these drawings for reference or example on another project requires the revoking of previously granted endorsements and approvals of plans. Use of the contract documents for reuse on another project is not authorized.

DRAWN BY CRB
STD ISSUE DATE 2019_11
REVIEWED BY AWM
DATE ISSUED 1/23/20
VA# M20-001

TITLE 2019 STANDARD BUILDING - BB20
4597F10-WOOD/WOOD
DESCRIPTION
WOOD BEARING WALLS W/FIBER CEMENT SIDING & CI
WOOD ROOF TRUSS FRAMING
FIBER CEMENT PANEL/BATTEN/ALPOLIC PANEL/BRICK EXT. FINISH
SITE ID 015-0071
SITE ADDRESS 605 SOUTH 7TH STREET, KANSAS CITY, KS

SHEET NO. 015-0071.00.0
S3.2
DETAILS

STRUCTURAL GENERAL NOTES:

DESIGN AND LOADING
1. THE STRUCTURAL DESIGN OF THIS BUILDING WAS BASED ON THE DESIGN CRITERIA:
   A. BUILDING CODE: 2012 INTERNATIONAL BUILDING CODE
   B. FLOOR:
      LIVE LOAD: 125 PSF
   C. ROOF:
      LIVE LOAD: 20 PSF
      DEAD LOAD: 20 PSF
   D. SNOW:
      GROUND LOAD: 20 PSF
      FLAT ROOF LOAD: 20 PSF
      SNOW EXPOSURE FACTOR, CE: 1.0
      IMPORTANCE FACTOR, I: 1.0
      THERMAL COEFFICIENT, CT: 1.0
   E. WIND:
      BASIC WIND SPEED: 115 MPH (3–SECOND GUST ULTIMATE)
      IMPORTANCE FACTOR: 1.00
      BUILDING OCCUPANCY CATEGORY: II
      WIND EXPOSURE: C
      PRESSURES PER ASCE7
   F. SEISMIC:
      OCCUPANCY CATEGORY: II
      IMPORTANCE FACTOR: 1.00
      SITE CLASS: D
      SS = 0.111G, S1= 0.063G
      SDS = 0.118, SD1 = 0.101
      DESIGN CATEGORY: B
      PLYWOOD SHEAR WALLS (R = 6.5)
      OSCBF (R = 3.25)
      Cs1: 0.018 Cs2: 0.036
      DESIGN BASE SHEAR = SEE CALCULATIONS
      ANALYSIS PROCEDURE: EQUIVALENT LATERAL FORCE PROCEDURE
   G. FLOOD LOAD: N/A
   H. SPECIAL LOADS: N/A

FOUNDATION NOTES
1. THE FOUNDATION DESIGN OF THIS BUILDING WAS BASED ON THE FOLLOWING CRITERIA:

   A. MINIMUM ALLOWABLE SOIL BEARING CAPACITY = 2000 PSF.
   B. RECOMMENDED BY OLSSON, INC – IN THEIR REPORT #019–1175 DATED 5–22–19. ANY FILL REQUIRED BELOW SLABS ON GRADE OR FOOTINGS SHALL BE COMPACTED AS REQUIRED BY THE SOILS REPORT NOTED IN ITEM #2.

2. ALL EXTERIOR FOOTINGS SHALL EXTEND BELOW THE MAXIMUM ANTICIPATED DEPTH OF FROST.

3. THE CONTRACTOR SHALL NOTIFY THE ARCHITECT OR ENGINEER OF RECORD IMMEDIATELY IN THE EVENT THAT THE SOILS CONDITIONS ENCOUNTERED VARY FROM THOSE SHOWN ON THE BORING LOGS.

4. ALL FOUNDATION EXCAVATIONS SHALL BE INSPECTED BY A SOILS TESTING LABORATORY PRIOR TO PLACEMENT OF CONCRETE.

CONCRETE AND REINFORCING
1. ALL CONCRETE SHALL BE IN ACCORDANCE WITH THE "AMERICAN CONCRETE INSTITUTE BUILDING CODE" (ACI 318) AND WITH "SPECIFICATIONS FOR STRUCTURAL CONCRETE FOR BUILDINGS" (ACI 301) LATEST EDITIONS.

2. ALL NORMAL WEIGHT CONCRETE (145 PCF) SHALL OBTAIN A MINIMUM 28 DAY COMPRESSIVE STRENGTH OF 3000 PSI (3500 PSI FOR SLABS).

3. ALL CONCRETE SUBJECT TO EXTERIOR EXPOSURE SHALL BE AIR ENTRAINED AS RECOMMENDED BY ACI 318.

4. TEST CYLINDERS SHALL BE MADE AND TESTED AS OUTLINED IN CHAPTER 16 OF ACI–301.

5. REINFORCING BARS SHALL BE DEFORMED BARS OF NEW BILLET STEEL CONFORMING TO ASTM A–615, GRADE 60. WELDED WIRE FABRIC SHALL CONFORM TO ASTM A–185. ALL REINFORCING AND ACCESSORIES SHALL BE DETAILED AND PLACED IN ACCORDANCE WITH ACI STANDARD 315 AND 315R.

6. PROVIDE ALL ACCESSORIES NECESSARY TO SUPPORT REINFORCEMENT AT POSITIONS SHOWN ON THE PLANS AND DETAILS. PLASTIC COATED ACCESSORIES SHALL BE USED IN ALL EXPOSED CONCRETE WORK.

7. THE GENERAL CONTRACTOR SHALL CHECK WITH ARCHITECTURAL, MECHANICAL AND ELECTRICAL DRAWINGS AND THE SUB–CONTRACTORS FOR OPENINGS, SLEEVES, ANCHORS, HANGERS, INSERTS, SLAB DEPRESSIONS AND OTHER ITEMS RELATED TO THE CONCRETE WORK AND SHALL ASSUME RESPONSIBILITY FOR THEIR PROPER LOCATION.

STRUCTURAL STEEL
1. STRUCTURAL STEEL SHALL BE DETAILED, FABRICATED AND ERECTED IN CONFORMANCE WITH THE AISC360 "SPECIFICATION FOR STRUCTURAL STEEL". SEISMIC DESIGN OF STRUCTURAL STEEL STRUCTURES SHALL CONFORM TO AISC 341.
2. STRUCTURAL STEEL SHALL CONFORM TO THE FOLLOWING ASTM SPECIFICATIONS:

   A. ANCHOR RODS F1554, GRADE 36
   B. HIGH STRENGTH STRUCTURAL BOLTS A325–N U.N.O.
   C. STRUCTURAL SHAPES (W) A992
   D. STRUCTURAL SHAPES (M, S, C, MC, PLATES) A36
   E. STRUCTURAL SHAPES (HP) A572
   F. STRUCTURAL TUBING (HSS) A500 GRADE B
   G. STRUCTURAL ANGLES A36

3. ALL WELDING ELECTRODES SHALL BE E70–XX. ALL SHOP AND FIELD WELDING SHALL BE MADE IN ACCORDANCE WITH A.W.S. D1.1 "CODE FOR WELDING IN BUILDING CONSTRUCTION" AND SHALL BE MADE BY CERTIFIED WELDERS.

LAMINATED VENEER LUMBER (LVL)
1. ALL BEAMS SHALL BE MANUFACTURED WITH LAMINATED VENEER LUMBER AND WATERPROOF ADHESIVES.

2. SIZE, MANUFACTURER & SERIES OF ALL LVL MEMBERS SHALL BE AS SHOWN ON DRAWINGS.

3. ANY SUBSTITUTIONS MUST BE APPROVED IN WRITING BY ENGINEER OR ARCHITECT OF RECORD.

4. PROVIDE 3" MINIMUM BEARING OR AS SPECIFIED ON PLANS. REFER TO PLANS FOR FASTENING OF MULTIPLE PIECE BEAMS.

OPEN WEB WOOD JOISTS
1. OPEN WEB WOOD JOISTS SHALL BE MANUFACTURED WITH MACHINE STRESS RATED TOP AND BOTTOM CHORDS. WEBS SHALL BE TUBULAR STEEL MEMBERS PER MANUFACTURERS' SPECIFICATIONS.

2. SIZE, MANUFACTURER & SERIES OF ALL OPEN WEB JOISTS SHALL BE AS SHOWN ON DRAWINGS. ANY SUBSTITUTIONS MUST BE APPROVED IN WRITING BY ENGINEER OR ARCHITECT OF RECORD.

3. PROVIDE 3 1/2" MINIMUM BEARING OR AS SPECIFIED ON PLANS. SHIM AS REQUIRED TO PROVIDE FULL BEARING AND LEVEL SUPPORT.

4. DO NOT CUT TOP OR BOTTOM CHORDS.

5. ALL HANGERS AND FRAMING CONNECTORS SHOWN ARE MANUFACTURED BY SIMPSON STRONG TIE. ANY SUBSTITUTIONS MUST BE APPROVED IN WRITING BY ENGINEER OR ARCHITECT OF RECORD.

6. REFER TO PLANS FOR WEB STIFFENER AND CONCENTRATED LOAD REQUIREMENTS.

7. REFER TO MANUFACTURERS' INSTALLATION GUIDE FOR JOIST BRACING DURING ERECTION. REFER TO MANUFACTURERS' INSTALLATION GUIDE FOR JOIST BRIDGING REQUIREMENTS.

SAWN LUMBER
1. ALL GRADES OF LUMBER INDICATED ON STRUCTURAL DRAWINGS SHALL BE RATED BY THE SOUTHERN PINE INSPECTION BUREAU (SPIB), OR THE WESTERN WOOD PRODUCTS ASSOCIATION (WWPA). LUMBER GRADES SHALL BE AS FOLLOWS, WITH A MAXIMUM MOISTURE CONTENT OF 19%:

   A. SOUTHERN PINE NO. 1.
   B. DOUGLAS FIR–LARCH NO. 1.
   C. HEM–FIR NORTH NO. 1

2. BOLT HEADS AND NUTS BEARING ON WOOD SHALL BE PROVIDED WITH STANDARD CUT WASHERS. ALL WOOD IN CONTACT WITH CONCRETE OR MASONRY SHALL BE PRESSURE TREATED.

3. MINIMUM NAILED CONNECTIONS FOR WOOD FRAMING MEMBERS SHALL BE IN ACCORDANCE WITH THE LOCAL BUILDING CODE OR TABLE 2304.9.1 OF THE INTERNATIONAL BUILDING CODE IF NO OTHER CRITERIA IS GIVEN.

4. CONNECTORS SHOWN ON THE DETAILS ARE MANUFACTURED BY SIMPSON. WRITTEN APPROVAL BY ENGINEER REQUIRED FOR SUBSTITUTIONS.

ROOF & WALL SHEATHING
1. ALL SHEATHING SHALL CONFORM TO AMERICAN PLYWOOD ASSOCIATION (APA) DESIGN SPECIFICATIONS, LATEST EDITION. SHEATHING SHALL BE CONTINUOUS OVER THREE ADJACENT SPANS MINIMUM.

2. WALL SHEATHING SHALL BE 15/32" (1/2" NOMINAL) APA RATED SHEATHING, EXPOSURE 1, 32/16. ALL WALL SHEATHING SHALL BE FASTENED TO SUPPORTING MEMBERS W/ 8d COMMON NAILS @ 6" O.C. AT PANEL EDGES AND 12" O.C. AT INTERMEDIATED SUPPORTS, U.N.O.

3. ROOF SHEATHING SHALL BE 23/32" (3/4" NOMINAL) APA RATED SHEATHING, EXPOSURE 1, 48/24. ALL ROOF SHEATHING SHALL BE FASTENED TO SUPPORTING MEMBERS W/10d COMMON NAILS @ 6" O.C. AT PANEL EDGES, AND 12" O.C. AT INTERMEDIATE SUPPORTS. U.N.O.

LIGHT GAGE METAL FRAMING
1. 16 GA. AND HEAVIER STUDS SHALL HAVE A MINIMUM YIELD STRESS OF 50,000 PSI. 18 GA. AND LIGHTER STUDS AND TRACKS SHALL HAVE A MINIMUM YIELD STRESS OF 33,000 PSI.

2. STUDS AND TRACKS SHALL BE 18 GA. MINIMUM U.N.O. THEY SHALL BE MANUFACTURED BY DIETRICH INDUSTRIES, INC. OR APPROVED EQUAL.

3. PROVIDE DOUBLE STUDS FOR FULL HEIGHT OF WALL EACH SIDE OF ALL OPENINGS UNLESS OTHERWISE NOTED. WELD STUDS TO EACH OTHER WITH 1 1/2" LONG 1/8" FILLET WELDS AT 12" O.C. EACH SIDE. PROVIDE STUD TRACK AT EACH HEAD AND SILL.

4. REFER TO PLANS AND DETAILS FOR CONNECTION OF STUD WALLS TO FOUNDATION, FLOOR OR ROOF.

SHOP DRAWINGS
1. SHOP DRAWING SUBMITTALS SHALL BE SUBMITTED ELECTRONICALLY.

2. SHOP DRAWINGS SHALL BE REVIEWED BY CONTRACTOR TO VERIFY THAT SUBMITTAL IS COMPLETE PRIOR TO SUBMITTING TO ARCHITECT/ENGINEER.

3. DRAWINGS CREATED BY THE ENGINEER OF RECORD CANNOT BE REPRODUCED AND/OR USED AS A SHOP DRAWING SUBMITTAL. SHOP DRAWING SUBMITTALS SHALL INCLUDE THE FOLLOWING:
   A. CONCRETE MIX DESIGN
   B. FOUNDATION REINFORCING BARS
   C. STRUCTURAL STEEL
   D. OPEN WEB JOISTS AND CALCULATIONS
   E. ROOF SHEATHING
   F. TRELLIS SYSTEM & CALCULATIONS
   G. LAMINATED VENEER LUMBER (LVL)
   H. SAWN LUMBER AND CONNECTORS

SPECIAL INSPECTIONS
1. SPECIAL INSPECTIONS SHALL BE PERFORMED IN ACCORDANCE WITH SECTION 1705 OF IBC AND THE OWNER SHALL EMPLOY ONE OR MORE SPECIAL INSPECTORS TO PROVIDE INSPECTIONS DURING CONSTRUCTION ON THE TYPES OF WORK LISTED UNDER SECTION 1705. THE FOLLOWING AREAS OF WORK REQUIRE SPECIAL INSPECTIONS IN ACCORDANCE WITH THE LISTED 2012 INTERNATIONAL BUILDING CODE SECTIONS/LOCATIONS:

   A. SOILS – SECTION 1705.6 PER TABLE 1705.6
   B. CONCRETE – SECTION 1705.3 PER TABLE 1705.3
   C. STEEL – SECTION 1705.2 (SEE AISC 360.10)

MISCELLANEOUS
1. ALL DIMENSIONS ON STRUCTURAL DRAWINGS TO BE CHECKED AGAINST ARCHITECTURAL, MECHANICAL AND ELECTRICAL DRAWINGS BY THE GENERAL CONTRACTOR AND ANY DISCREPANCIES ARE TO BE REPORTED TO THE ARCHITECT IMMEDIATELY.

2. THE CONTRACTOR SHALL ASSUME RESPONSIBILITY, UNRELIEVED BY REVIEW OF SHOP DRAWINGS OR PERIODIC OBSERVATION OF CONSTRUCTION, FOR COMPLIANCE WITH THE CONTRACT DOCUMENTS, FOR FABRICATION PROCESSES AND CONSTRUCTION TECHNIQUES, AND FOR SAFE CONDITIONS ON THE JOB SITE.

3. DO NOT SCALE THE DRAWINGS.

CONCRETE BLOCK JOINT REINFORCEMENT:
ALL CONCRETE BLOCK WALLS TO RECEIVE THE FOLLOWING JOINT REINFORCEMENT:
LADDER TYPE JOINT REINFORCING WITH SIDE AND CROSS RODS WITH WIRE SIZE (W2.8 OR 3/16"ø) SPACED 16" O.C. VERTICALLY. (HOHMANN & BARNARD 220 "SUPER HEAVY DUTY" OR EQUAL) SIMILAR FOR CONCRETE BRICK PRODUCTS.

1 / S4.0 CONCRETE BLOCK JOINT REINFORCEMENT

VENEER TIE REQUIREMENTS:
1. USE THE FOLLOWING:
   VENEER TIES W/ WIRE SIZE (W2.8 OR 3/16"ø) SPACED 16" O.C. VERTICALLY AND 32" HORIZONTALLY. ADDITIONAL TIES ALONG ALL OPENINGS GREATER THAN 16" ARE REQUIRED TO BE LOCATED WITHIN 12" OF OPENING AND SPACED 36" O.C. MAX. AROUND OPENING PERIMETER. (HOHMANN & BARNARD VBT–VEE–BYNA TIE WITH DW10–HS ANCHOR PLATE OR EQUAL).

2 / S4.0 VENEER TIE REQUIREMENTS

REV	DATE	DESCRIPTION	BY
.	.	.	.
.	.	.	.
.	.	.	.
.	.	.	.
.	.	.	.
.	1/23/20	PERMIT	.
.	1/13/20	USRD REVIEW SET	.

LICENSED PROFESSIONAL ENGINEER — PAUL W. VOIGT — KANSAS — 1/23/20

PREPARED BY:
VOIGT & ASSOCIATES, INC.
STRUCTURAL ENGINEERING SERVICES
4635 NICOLS RD.
SUITE 200
EAGAN, MINNESOTA 55122
PHONE (651) 686-7227
FAX (651) 686-0444

© 2020 McDonald's USA, LLC

PREPARED FOR: McDonald's USA, LLC

These drawings and specifications are the confidential and proprietary property of McDonald's USA, LLC and shall not be copied or reproduced without written authorization. The contract documents were prepared for use on this specific site. In contrast with this, these drawings are not suitable for use on a different site or at a later time. Use of these drawings for reference or example on another project requires the express written consent of McDonald's and payment of royalties. Alteration of the contract documents for reuse on another project is not authorized.

DRAWN BY	CRB
STD ISSUE DATE	2019_11
REVIEWED BY	AWM
DATE ISSUED	1/23/20
V&#	M20–001

TITLE: 2019 STANDARD BUILDING – BB20
4597F10–WOOD/WOOD

DESCRIPTION: WOOD BEARING WALLS W/FIBER CEMENT SIDING & CI
WOOD ROOF TRUSS FRAMING
FIBER CEMENT PANEL/BATTEN/ALPOLIC PANEL/BRICK EXT. FINISH

SITE ID: 015–0071
SITE ADDRESS: 605 SOUTH 7TH STREET, KANSAS CITY, KS

015–0071.00.0

SHEET NO. S4.0
STRUCTURAL NOTES

IF YOU HAVE ANY QUESTIONS REGARDING THE PLANS, PLEASE CALL THE DESIGNER.

DESIGNER: Wendy Wenborg
PHONE: 952-540-4047
EMAIL: wwenborg@epinc.com

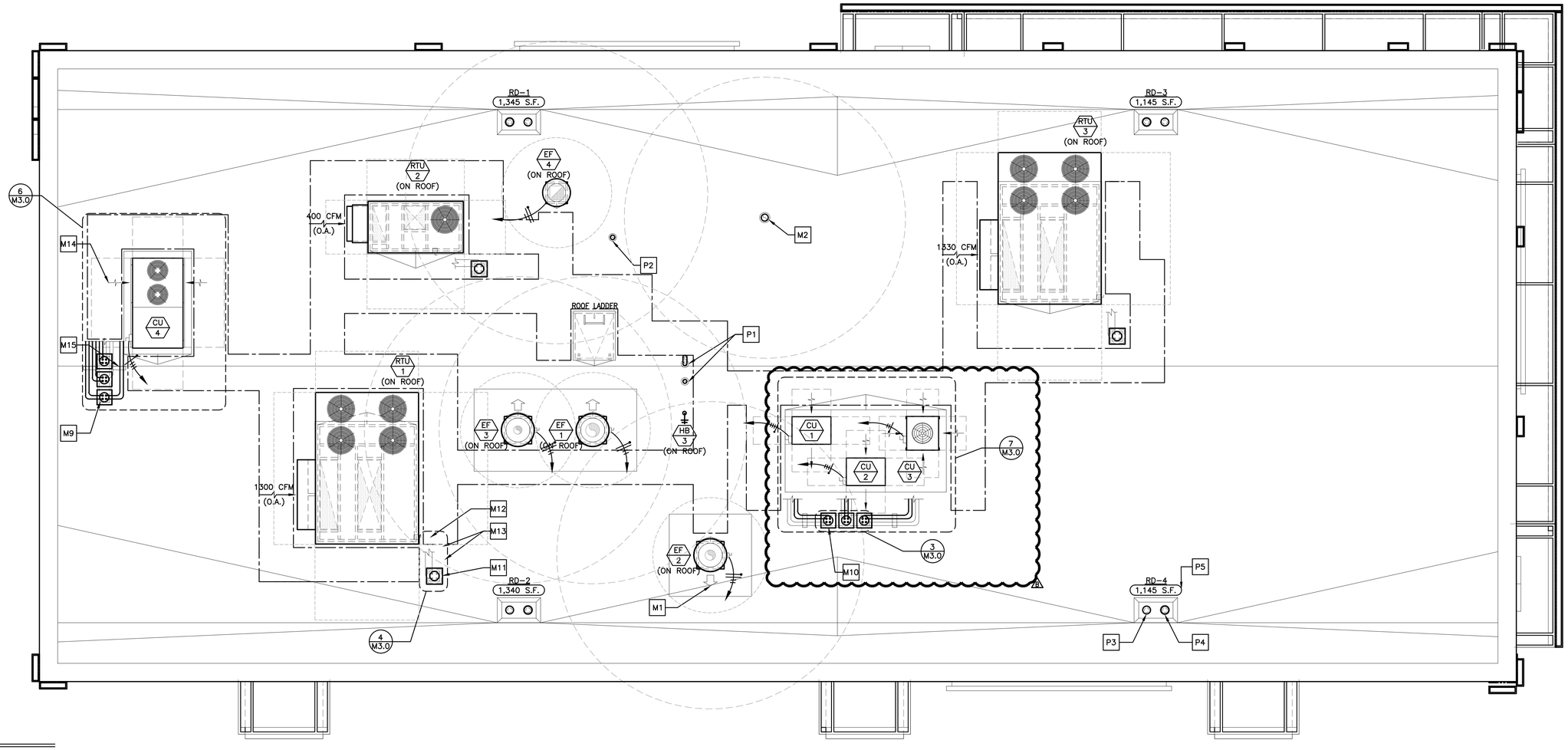

1 M1.0 ROOF PLAN
1/4"=1'-0"

DRAWING NOTES

1. ROOFTOP EQUIPMENT LOCATIONS SHOWN ARE GENERAL. ACTUAL LOCATIONS SHALL BE COORDINATED WITH THE STRUCTURAL DRAWINGS.
2. ROOF OPENINGS FOR ROOFTOP UNITS AND EXHAUST FANS SHALL BE COORDINATED WITH THE MANUFACTURER.
3. ROOF OPENINGS FOR PIPE PORTALS SHALL ONLY BE LARGE ENOUGH TO ALLOW PIPE AND CONDUIT PENETRATIONS. PIPE PORTAL CURB SHALL BE FILLED WITH AS MUCH BATT INSULATION AS POSSIBLE.
4. PRIOR TO INSTALLING THE TOP OF THE EQUIPMENT PLATFORM, INSIDE OF THE PLATFORM SHALL BE INSULATED WITH AS MUCH BATT INSULATION AS POSSIBLE.

DRAWINGS AND SPECIFICATIONS ARE TO BE CONSIDERED AS SUPPLEMENTING EACH OTHER. WORK SPECIFIED BUT NOT SHOWN ON DRAWINGS, OR SHOWN ON DRAWINGS BUT NOT SPECIFIED, SHALL BE PERFORMED OR FURNISHED AS THOUGH MENTIONED IN BOTH SPECIFICATIONS AND DRAWINGS. IF NOT OTHERWISE DIRECTED, INSTALLATION OF ALL SYSTEMS AND EQUIPMENT SHALL BE IN ACCORDANCE WITH APPLICABLE CODES AND IN ACCORDANCE WITH MANUFACTURER'S INSTALLATION INSTRUCTIONS. WHERE WORK DESCRIBED IN THE SPECIFICATIONS IS IN CONFLICT WITH THE WORK SHOWN ON THE DRAWINGS, THE CONTRACTOR SHALL SUPPLY THE GREATER QUANTITY, QUALITY AND COST VIA THE BID AND CONTACT THE ENGINEER FOR CLARIFICATION ON DIRECTION PRIOR TO INSTALLATION.

PRIOR TO BID, THE CONTRACTOR SHALL REVIEW THE MECHANICAL, ELECTRICAL AND KITCHEN EQUIPMENT DRAWINGS. THE CONTRACTOR SHALL INCLUDE IN HIS BID ALL RELEVANT WORK IN THE ENTIRE SET OF DOCUMENTS AND REPORT ALL DISCREPANCIES BETWEEN THESE DRAWINGS TO THE ENGINEER PRIOR TO BIDDING FOR CLARIFICATION. IF DISCREPANCIES REMAIN UNRESOLVED DUE TO A SHORT TIME FRAME, THE CONTRACTOR SHALL INCLUDE THE MOST WORK AND THE HIGHER COSTS IN THE BID. SOLUTIONS TO UNREPORTED DISCREPANCIES WILL BE DETERMINED BY THE ARCHITECT/ENGINEER, WITH NO ADDITIONAL COMPENSATION DUE TO THE CONTRACTOR.

KEYED NOTES

- M1 ARROW INDICATES DIRECTION OF EXHAUST FAN HINGE SWING (TYP.)
- M2 6"ø ALUMINUM EXHAUST DUCT FROM EXHAUST FAN (EF-5). PROVIDE PORTALS PLUS PLASTI-FLASH WITH C-126 CAP (OR EQUAL) FOR ROOF PENETRATION. TERMINATE DUCT A MIN. OF 24" ABOVE FINISHED ROOF WITH GOOSENECK.
- M3 NOT USED
- M4 NOT USED
- M5 NOT USED
- M6 NOT USED
- M7 NOT USED
- M8 NOT USED
- M9 ROOF PIPE PORTAL FOR MAC UNIT
- M10 ROOF PIPE PORTAL FOR CONDENSING UNITS
- M11 ROOF PIPE PORTAL FOR ROOFTOP UNITS (TYP. 3 PLACES)
- M12 GAS PIPING FROM ROOF PORTAL TO ROOFTOP UNIT SHALL BE COATED WITH A CORROSION RESISTANT PAINT (SEE GAS PIPING NOTES)
- M13 GAS PRESSURE REGULATOR AND SHUT-OFF VALVE (TYP.)
- M14 ARROW INDICATES DIRECTION OF AIRFLOW FOR CONDENSING OR ROOFTOP UNIT AIR INTAKE (TYP.)
- M15 REFRIGERANT PIPING SUPPORT AS REQUIRED. PROVIDE ROOFTOP BLOX MODEL RTB-01 (OR EQUAL) AND ALL NECESSARY ACCESSORIES FOR PROPER PIPE AND CONDUIT SUPPORT. PROVIDE GALVANIZED PIPE SHIELD TO PROTECT INSULATION AT ALL SUPPORTS.
- P1 COMBUSTION AIR INTAKE AND EXHAUST VENT FOR SEALED COMBUSTION WATER HEATER (SEE PLUMBING DRAWINGS). PROVIDE PORTALS PLUS PLASTIFLASH WITH C-126 CAP (OR EQUAL) FOR ROOF PENETRATION.
- P2 PLUMBING VENT THROUGH ROOF (SEE PLUMBING DRAWINGS). PROVIDE PORTALS PLUS PLASTI-FLASH WITH C-126 CAP (OR EQUAL) FOR ROOF PENETRATION.
- P3 PRIMARY ROOF DRAIN WITH DOME STRAINER (SEE PLUMBING DRAWINGS)
- P4 OVERFLOW ROOF DRAIN WITH DOME STRAINER (SEE PLUMBING DRAWINGS)
- P5 AREA OF ROOF SERVED BY ROOF DRAIN (TYP.)

PIPE PORTAL SCHEDULE

MANUFACTURER	CURB DIMENSIONS	CURB TYPE	CAP TYPE (QTY)	SERVES
RPS	12"x12"x11"H	RC-2A	N18 (1)	RTU-1 THROUGH RTU-3
RPS	43"x12"x13"H	RC-2A	N18 (3)	CU-4
RPS	27"x12"x13"H	RC-2A	N18 (2)	CU-1 THROUGH CU-3

SEQUENCE OF OPERATION

THERMOSTAT SETTINGS			
		SETPOINTS	
MODE	FAN	COOLING	HEATING
OCCUPIED	ON	75°F	70°F
UNOCCUPIED	AUTO	90°F	55°F
HUMIDITY			
HUMIDITY SETPOINT (FOR DEHUMIDIFICATION UNITS ONLY)			60%
DEMAND CONTROL VENTILATION			
		MINIMUM	MAXIMUM
CO2 (FOR DCV)		400 PPM	1000 PPM

RTU-1, RTU-2 & RTU-3:

1. OCCUPIED MODE SHALL BEGIN AS FOLLOWS:
   - RTU-1: 1.5 HOURS BEFORE OPEN
   - RTU-2: 1 HOUR BEFORE OPEN
   - RTU-3: 30 MINUTES BEFORE OPEN
2. ROOFTOP UNIT FAN SHALL RUN CONTINUOUSLY DURING OCCUPIED MODE
3. ECONOMIZER SHALL BE OPEN DURING OCCUPIED MODE (OUTDOOR AIR THROUGH ROOFTOP UNITS SERVES AS MAKE-UP AIR FOR THE KITCHEN EXHAUST SYSTEM) – REFER TO E3.2 FOR HOOD/FAN INTERLOCK DETAILS.
4. UNOCCUPIED MODE SHALL BEGIN ONE (1) HOUR AFTER STORE CLOSES
5. DURING UNOCCUPIED MODE, ECONOMIZER IS CLOSED AND HEATING, COOLING AND FAN OPERATE IN AUTO MODE (ON DEMAND)

REV	DATE	DESCRIPTION	BY
-	-	-	-
-	-	-	-
3	12/03/20	SERVICE AREA OPTIMIZATION	WLW
-	11/13/20	USRD SAO SET REVIEW	WLW
2	05/05/20	CIVIL & PLAN REVIEW COMMENTS	WLW
-	01/23/20	PERMIT SET	WLW
-	01/13/20	USRD PROGRESS SET REVIEW	WLW

emanuelson-podas
consulting engineers
Emanuelson-Podas, Inc.
7705 Bush Lake Road
Edina, MN 55439
(952) 930-0050 | www.epinc.com

3801.0037

MICHAEL WEBERT LICENSED 17648 KANSAS PROFESSIONAL ENGINEER

PREPARED BY: 12/03/20

PREPARED FOR: McDonald's USA, LLC

©2020 McDonald's USA, LLC

These drawings and specifications are the confidential and proprietary property of McDonald's USA, LLC and shall not be copied or reproduced without written authorization. The contract documents were prepared for use on this specific site in conjunction with its issue date and are not to be used for other locations or at a later date. Re-use of these drawings for reference or example on another project requires the services of properly licensed architects and engineers. Reproduction of the contract documents for reuse on another project is not authorized.

DRAWN BY: MJW
STD ISSUE DATE: 2019_11
REVIEWED BY: WLW
DATE ISSUED: 01-23-20
REV#19175

TITLE: 2019 STANDARD BUILDING – BB20 4597F10-WOOD/WOOD

DESCRIPTION: WOOD BEARING WALLS W/FIBER CEMENT SIDING & CI WOOD ROOF TRUSS FRAMING FIBER CEMENT PANEL/BATTEN/ALPOLIC PANEL/BRICK EXT. FINISH

SITE ID: 015-0071
SITE ADDRESS: 605 SOUTH 7TH STREET, KANSAS CITY, KS

SHEET NO. 015-0071.00.B
M1.0
ROOF PLAN

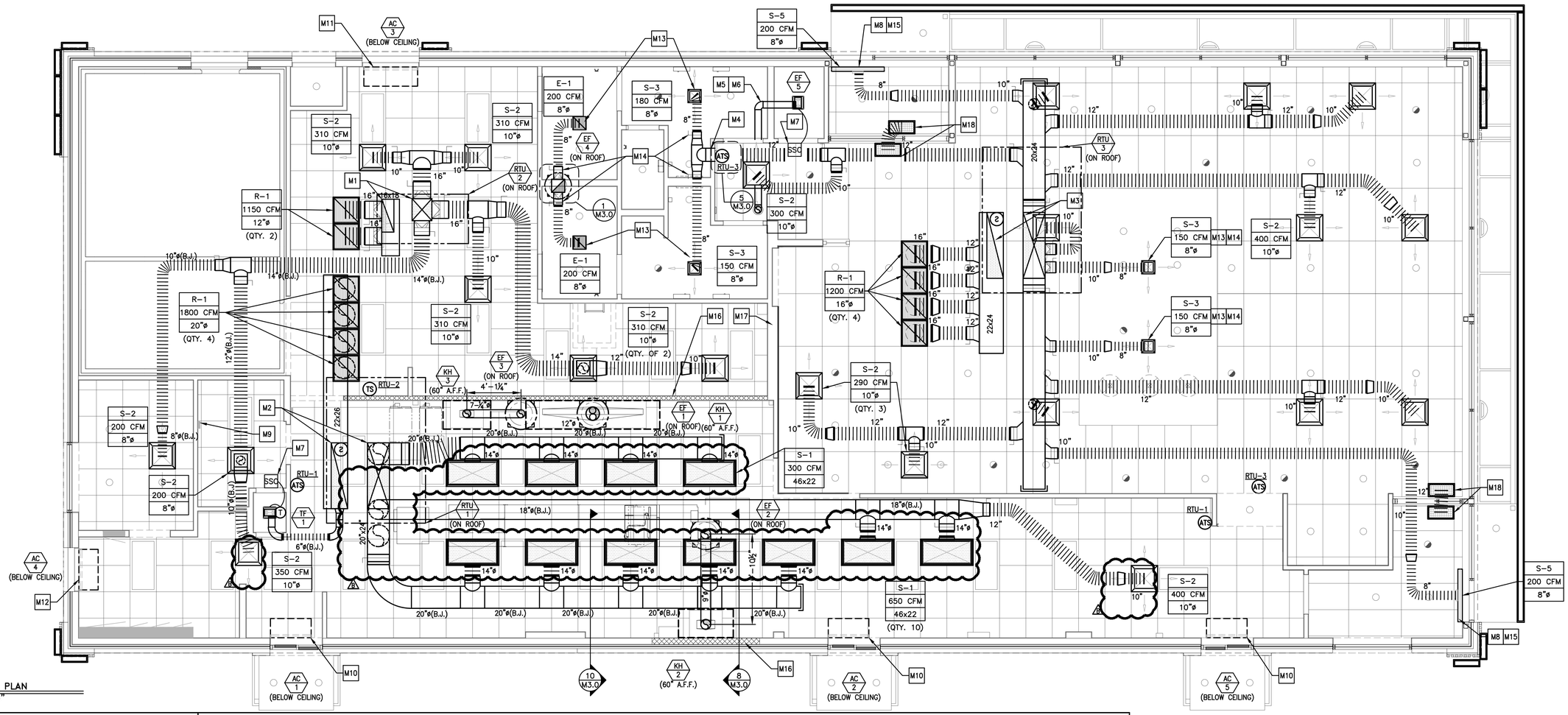

1 / M1.2 DUCTWORK PLAN
1/4"=1'-0"

DRAWING NOTES

1. ALL DUCTWORK SHALL BE RUN BETWEEN OR THROUGH THE JOISTS UNLESS NOTED OTHERWISE. DUCTWORK DESIGNATED WITH (B.J.) SHALL BE RUN BELOW THE JOISTS.
2. DUCT SIZES SHOWN ARE INTERNAL FREE AREA DIMENSIONS UNLESS NOTED OTHERWISE.
3. ALL SHEET METAL DUCTWORK SHALL BE EXTERNALLY INSULATED. INSULATION IS NOT SHOWN FOR CLARITY. SEE MECHANICAL NOTES FOR INSULATION REQUIREMENTS.
4. CARBON STEEL KITCHEN EXHAUST DUCTWORK SHALL BE EXTERNALLY INSULATED. INSULATION NOT SHOWN FOR CLARITY. SEE MECHANICAL NOTES AND DETAILS FOR INSULATION REQUIREMENTS.
5. RETURN AIRFLOW VOLUME SHOWN ON PLAN IS FOR DUCTWORK SIZING PURPOSES WHEN THE UNIT IS IN RECIRCULATION (UNOCCUPIED) MODE.
6. DIFFUSERS IN DINING ROOM ARE SPECIFIC TO THE DECOR PLAN SHOWN. DIFFERENT CEILING LAYOUTS MAY REQUIRE A DIFFERENT DIFFUSER TYPES, QUANTITIES, LOCATIONS AND FINISHES/COLORS.

KEYED NOTES

- **M1** 18x20 SUPPLY AND 11x30 RETURN DUCT DROPS FROM ROOFTOP UNIT (RTU–2)
- **M2** 20x60 SUPPLY AND 15x60 RETURN DUCT DROPS FROM ROOFTOP UNIT (RTU–1)
- **M3** 20x60 SUPPLY AND 15x60 RETURN DUCT DROPS FROM ROOFTOP UNIT (RTU–3)
- **M4** PROVIDE SHEET METAL DUCT AT ALL DRAFTSTOP WALL PENETRATIONS (TYP.) (WHERE REQUIRED BY CODE.)
- **M5** 6"ø ALUMINUM DUCT FROM EXHAUST FAN UP THROUGH ROOF
- **M6** EXTERNALLY INSULATE EXHAUST DUCT FROM FAN TO ROOF PENETRATION
- **M7** STEADY STATE SPEED CONTROLLER FOR CEILING MOUNTED EXHAUST FAN. STEADY STATE SPEED CONTROLLER SHALL BE INSTALLED OVER SUSPENDED CEILING FOR ACCESS. DO NOT INSTALL OVER AREAS WITH DRYWALL CEILINGS.
- **M8** SET DIFFUSER (S–5) FOR VERTICAL AIR THROW PATTERN (TYP.)
- **M9** BUILDING AUTOMATION SYSTEM LOCATION. SEE LIGHTING CONTROL DETAILS ON SHEET E4.1.
- **M10** MOUNT AIR CURTAIN TIGHT TO CEILING
- **M11** MOUNT AIR CURTAIN WITH BOTTOM OF UNIT AT TOP OF DOOR FRAME
- **M12** MOUNT AIR CURTAIN WITH BOTTOM OF UNIT ABOVE DOOR FRAME AND TOP OF SWITCHGEAR TO MEET 3'–0" MINIMUM SWITCHGEAR'S CLEARANCE REQUIREMENT
- **M13** FOR DIFFUSERS INSTALLED IN DRYWALL CEILINGS, VOLUME DAMPER IS INTEGRAL TO DIFFUSER AND ADJUSTABLE AT FACE OF DIFFUSER (SEE NOTE 18 UNDER "VENTILATION SYSTEMS" ON DRAWING M4.0 AND AIR DEVICE SCHEDULE ON DRAWING M4.1)
- **M14** FOR DIFFUSERS INSTALLED IN DRYWALL CEILINGS, INSTALL HIGH–EFFICIENCY TAKE–OFF'S WITH VOLUME DAMPER IN FULL–OPEN POSITION TO FACILITATE BALANCING AT FACE OF DIFFUSER.
- **M15** GENERAL CONTRACTOR SHALL PROVIDE ADDITIONAL T–BAR FRAME TO PROPERLY LOCATE DIFFUSER AS SHOWN. AIR STREAM FROM DIFFUSER SHALL COVER ENTIRE DOOR OPENING.
- **M16** NONCOMBUSTIBLE WALL CONSTRUCTION BEHIND TYPE I KITCHEN HOODS. REFER TO SHEET A1.0 FOR MORE INFORMATION.
- **M17** CONTRACTOR TO PROVIDE LOUVERED RETURN AIR BEHIND EACH MENU BOARD.
- **M18** PROVIDE TITUS 50F OR EQUAL, 24x12 OPEN CEILING GRATE PAINTED TO MATCH CEILING. PROVIDE PLASTER FRAMING FOR DRYWALL CEILING APPLICATIONS.

2015 IMC SECTION 403.3 - VENTILATION SCHEDULE

UNIT	AREA SERVED	AREA FT² (Az)	CFM/PERSON (Rp)	CFM/FT² (Ra)	PEOPLE OR PEOPLE/1000 FT² (Pz)	UNCORRECTED REQUIRED O/A CFM (Vbz)	Ez*	Ev**	REQUIRED O/A CFM (Vot)***	ACTUAL O/A CFM	REQUIRED EXHAUST CFM	ACTUAL EXHAUST CFM
RTU-1	PRESENTER	352	5	0.06	4	42	0.8	0.90				
	KITCHEN	682	7.5	0.18	18	-	0.8					
						300			333	1300		
RTU-2	SUPPORT	574	0	0.12	0	69	0.8	0.90	-	-		
	MANAGER'S OFFICE	59	5	0.06	1	9	0.8		-	-		
	CREW ROOM	99	5	0.06	5	31	0.8		-	-		
	ORDER	140	5	0.06	7	43	0.8		-	-		
						151			168	400		
RTU-3	DINING	1759	7.5	0.18	95	1030	0.8	0.91	-	-		
	PRESENTER	0	5	0.06	0	0	0.8		-	-		
	VESTIBULE 1	90	0	0.06	0	5	0.8		-	-		
	VESTIBULE 2	53	0	0.06	0	3	0.8		-	-		
	WOMEN'S	136	0	0.06	0	8	0.8		-	-		
	MEN'S	122	0	0.06	0	7	0.8		-	-		
						1054			1080	1330		
RTU-4	PLAYPLACE	0	7.5	0.18	0	0	0.8	0.96				
									0	0		
EF-1, 2 & 3	KITCHEN	682	-	0.7	-	-	-	-	-	-	477	2405
EF-4	WOMEN'S	136	-	-	-	-	-	-	-	-	100	200
	MEN'S	122	-	-	-	-	-	-	-	-	100	200
EF-6	PLAYPLACE (UNISEX)	0	-	-	-	-	-		-	-	0	0
											200	400

* Zone Air Distribution Effectiveness Based on ASHRAE 62.1 Table 6.2 for Ceiling Supply of Warm Air 15° F or More Above Space Temperature and Ceiling Return (IMC Table 403.3.1.2)
** Ventilation System Efficiency Based on ASHRAE 62.1 Table 6.3 and Section 6.2.5 (IMC Section 403.3.2.3 MZ)
*** Corrected Required O/A Intake Required for System Calculated Based on ASHRAE 62.1 Section 6.2 (IMC Section 403.3)

AIR BALANCE SCHEDULE

UNIT	SUPPLY AIR	RETURN AIR	OUTDOOR AIR	EXHAUST AIR	PRESSURE
RTU-1	7200	5900	1300		1300
RTU-2	2300	1900	400		400
RTU-3	4200	2870	1330		1330
EF-1				1350	-1350
EF-2				575	-575
EF-3				480	-480
EF-4				400	-400
EF-5				75	-75
TOTALS	13700	10670	3030	2880	150

NOTES:
1. BALANCING TOLERANCES ARE AS FOLLOWS:
   HOODS: 0% TO +10%
   OUTDOOR AIR: 0% TO +10%
   SUPPLY AND RETURN AIR DIFFUSERS: –10% TO +10%
   TOILET EXHAUST AIR: –10% TO +10%
2. BALANCE ROOFTOP UNIT SUPPLY AND RETURN AIR PRIOR TO TURNING ON EXHAUST FANS.
3. EXHAUST HOODS SHALL BE BALANCED WITH A 4" VANE ANEMOMETER.
4. RTU BLOWER TO RUN CONTINUOUSLY DURING OCCUPIED HOURS. REFER TO SEQUENCE OF OPERATIONS ON M1.0 AND E3.2 FOR HOOD/FAN INTERLOCK DETAILS.

HEATING SCHEDULE

EQUIPMENT	INPUT (kW)	OUTPUT (BTU/HR)	REQUIRED HEAT (BTU/HR)
ROOFTOP UNIT (RTU-1)	39	133,107	110,956
ROOFTOP UNIT (RTU-2)	13	44,369	42,383
ROOFTOP UNIT (RTU-3)	52	177,476	140,516
TOTALS	104	354,952	293,855

REV	DATE	DESCRIPTION	BY
2	12/03/20	SERVICE AREA OPTIMIZATION	WLW
1	11/13/20	USRD SAO SET REVIEW	WLW
3	05/05/20	CIVIL & PLAN REVIEW COMMENTS	WLW
	01/23/20	PERMIT SET	WLW
	01/13/20	USRD PROGRESS SET REVIEW	WLW

PREPARED FOR:
McDonald's USA, LLC

© 2020 McDonald's USA, LLC
These drawings and specifications are the confidential and proprietary property of McDonald's USA, LLC and shall not be copied or reproduced without written authorization. The contract documents were prepared for use on this specific site in conjunction with its issue date and are incomplete without all other issue dates. Use of these drawings for reference or example on another project requires the services of properly licensed architects and engineers. Reproduction of the contract documents for resale or working purposes is not authorized.

PREPARED BY:
emanuelson-podas
consulting engineers
Emanuelson-Podas, Inc.
705 Bush Lake Road
Eden Prairie, MN 55344
(952) 930-0050 | www.epinc.com
3801.0037

MICHAEL WEBERT LICENSED 17648 KANSAS PROFESSIONAL ENGINEER
12/03/20

DRAWN BY: MJW
STD ISSUE DATE: 2019_11
REVIEWED BY: WLW
DATE ISSUED: 01–23–20

TITLE: 2019 STANDARD BUILDING – BB20
4597F10–WOOD/WOOD
DESCRIPTION: WOOD BEARING WALLS W/FIBER CEMENT SIDING & CI
WOOD ROOF TRUSS FRAMING
FIBER CEMENT PANEL/BATTEN/ALPOLIC PANEL/BRICK EXT. FINISH
SITE ID: 015–0071
SITE ADDRESS: 605 SOUTH 7TH STREET, KANSAS CITY, KS
R0719175

SHEET NO.: 015–0071.00.B
M1.2
DUCTWORK PLAN

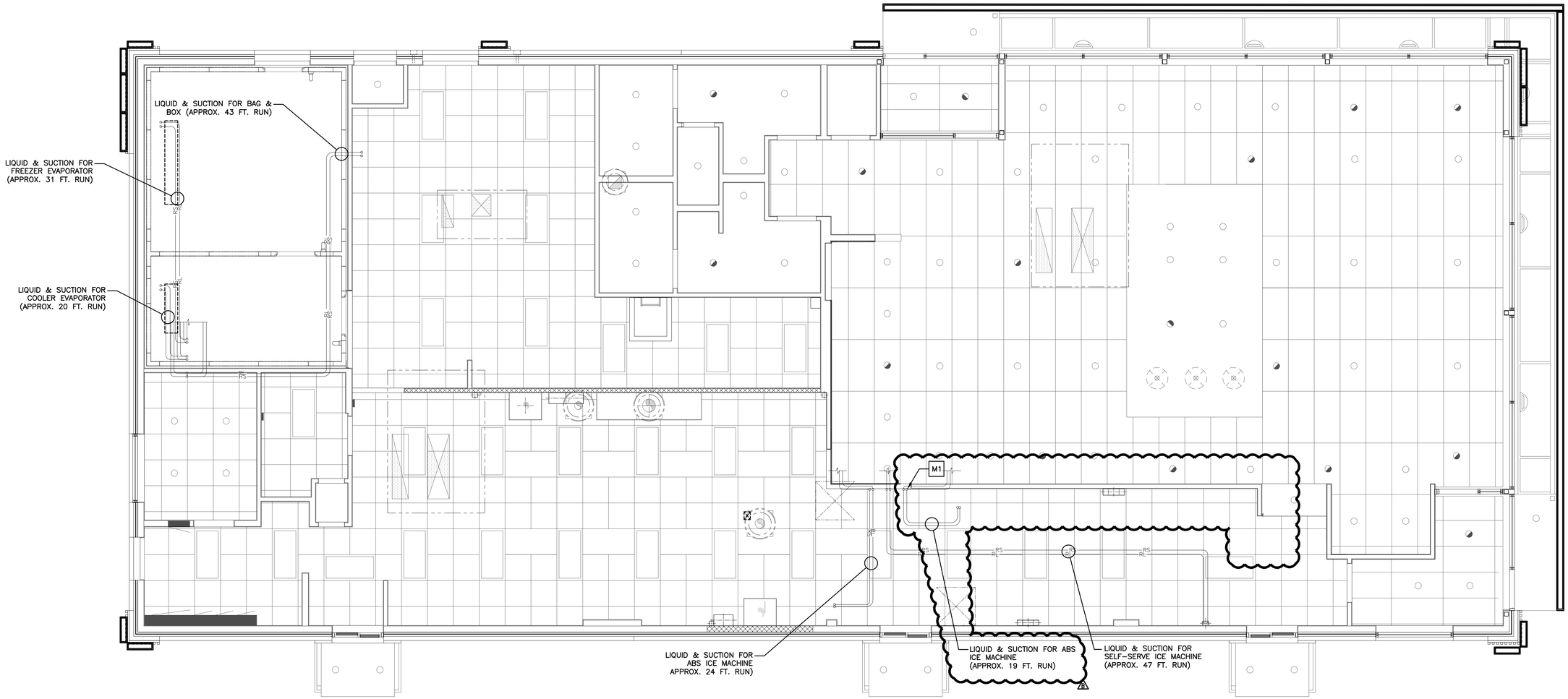

1 / M1.4 MECHANICAL PIPING PLAN
1/4"=1'-0"

DRAWING NOTES

1. GAS PIPING LENGTHS ARE APPROXIMATE AND ARE SHOWN FOR SIZING PURPOSES ONLY.
2. REFRIGERANT PIPE SIZES SHALL BE PER MANUFACTURER'S INSTALLATION INSTRUCTIONS.

KEYED NOTES

M1 REFRIGERANT LIQUID AND SUCTION LINES UP THROUGH ROOF TO CONDENSING UNITS (TYP. 6 PLACES – SEE DETAIL 3 ON DRAWING M3.0)

REV	DATE	DESCRIPTION	BY
2	12/03/20	SERVICE AREA OPTIMIZATION	WLW
1	11/13/20	USRD SAO SET REVIEW	WLW
0	05/05/20	CIVIL & PLAN REVIEW COMMENTS	WLW
	01/23/20	PERMIT SET	WLW
	01/13/20	USRD PROGRESS SET REVIEW	WLW

emanuelson-podas
consulting engineers
Emanuelson-Podas, Inc.
7705 Bush Lake Road
Edina, MN 55439
(952) 930-0050 | www.epinc.com

3801.0037

MICHAEL WEBERT LICENSED 17648 KANSAS PROFESSIONAL ENGINEER

12/03/20

PREPARED BY:

PREPARED FOR:
McDonald's USA, LLC

© 2020 McDonald's USA, LLC
These drawings and specifications are the confidential and proprietary property of McDonald's USA, LLC and shall not be copied or reproduced without written authorization. The contract documents were prepared for use on this specific site in conjunction with its issue date and are not suitable for use on other sites or at a later date. In addition, if these drawings for reference or example on another project requires the services of properly licensed architects and engineers. Reproduction of the contract documents for reuse on another project is not authorized.

DRAWN BY: MJW
STD ISSUE DATE: 2019_11
REVIEWED BY: WLW
DATE ISSUED: 01-23-20
RQ#19175

TITLE: 2019 STANDARD BUILDING – BB20 4597F10-WOOD/WOOD

DESCRIPTION
WOOD BEARING WALLS W/FIBER CEMENT SIDING & CI
WOOD ROOF TRUSS FRAMING
FIBER CEMENT PANEL/BATTEN/ALPOLIC PANEL/BRICK EXT. FINISH

SITE ID: 015-0071
SITE ADDRESS: 605 SOUTH 7TH STREET, KANSAS CITY, KS

SHEET NO.
015-0071.00.B
M1.4
MECH. PIPING PLAN

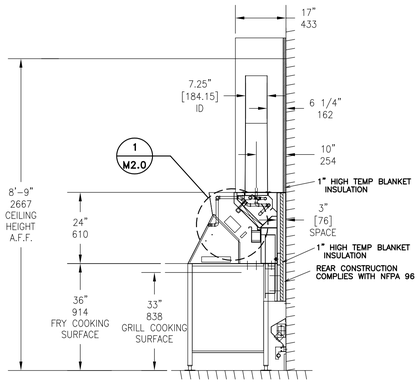

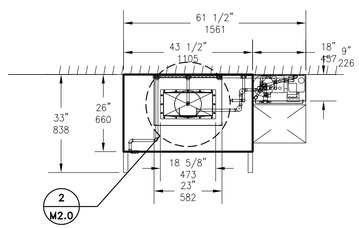

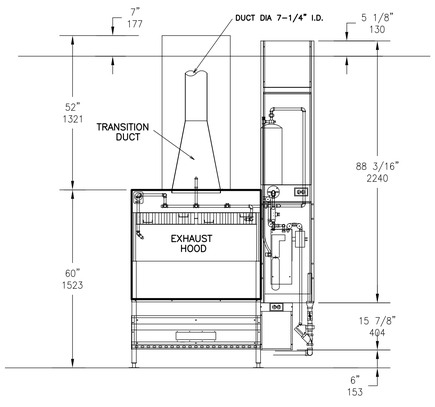

KITCHEN EXHAUST HOOD

TAG: KH-3 (SEE KITCHEN EXHAUST HOOD SCHEDULE)
SCALE: ½"=1'-0"

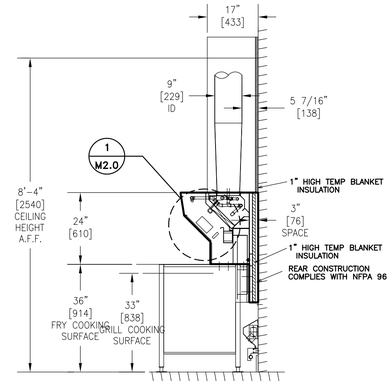

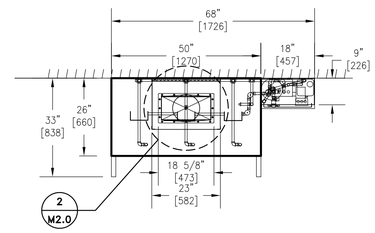

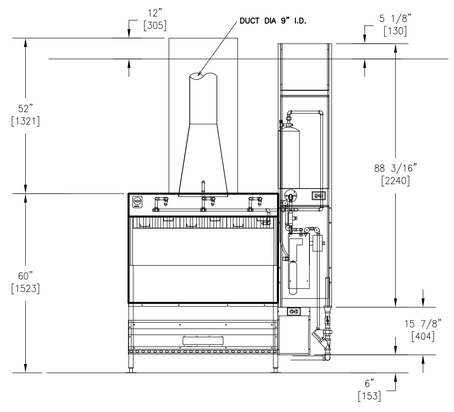

KITCHEN EXHAUST HOOD

TAG: KH-2, KH-3 (SEE KITCHEN EXHAUST HOOD SCHEDULE)
SCALE: ½"=1'-0"

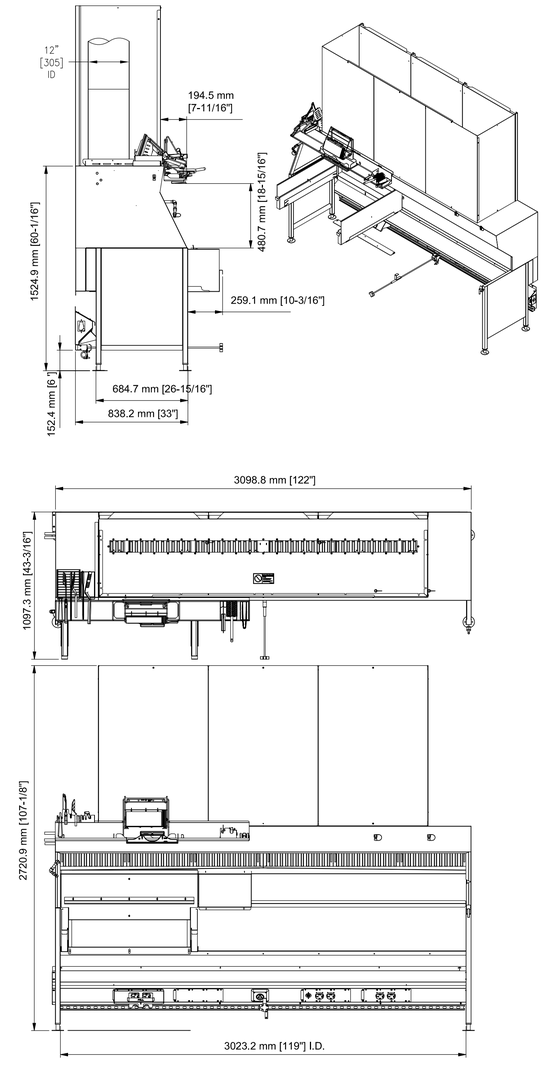

KITCHEN EXHAUST HOOD

TAG: KH-1 (SEE KITCHEN EXHAUST HOOD SCHEDULE)
SCALE: ½"=1'-0"

McDONALD'S CORPORATION
OAK BROOK,ILLINOIS 60521

EQUIP. I.D. EXHAUST HOOD: UH SERIES
MANUF. I.D. HKD SERIAL# 5512341
MANUF.EQUIP.I.D. UH500804 MFG DATE 05/03/17

LENGTH OF HOOD	MINIMUM DESIGN EXHAUST AIRFLOW, CFM/ft (CUM/M) OF HOOD LENGTH W/DUCT	MINIMUM DESIGN EXHAUST AIRFLOW, CFM/ft (CUM/M) OF HOOD LENGTH W/ESP
26"(66)	128 (12)	128 (12)
34.5" (88)	143 (13.3)	137 (12.8)
35–122"(89–310)	166 (15.5)	151 (14.0)
133.75"(339.7)	132 (12.3)	132 (12.3)

FOR USE OVER COMMERCIAL GAS OR ELECTRIC COOKING EQUIPMENT UP TO 400°F (204°C) (EXCEPT UPPER PLATEN OF 2 SIDED COOKER MAY BE UP TO 425°F (218°C))

–22" (558.8mm) MAXIMUM CLEARANCE FROM COOKING SURFACE TO FRONT LOWER EDGE OF HOOD
–16" (406.4mm) MINIMUM CLEARANCE FROM COOKING SURFACE TO FRONT LOWER EDGE OF HOOD
–2 1/4" (57.1mm) MINIMUM SIDE HOOD OVERHANG FROM EDGE OF COOKING SURFACE
–16 1/4" (412.75mm) MAXIMUM HOOD SETBACK FROM EDGE OF COOKING SURFACE
–THESE HOODS ARE LISTED FOR DIRECT REAR MOUNTING ON A COMBUSTIBLE SURFACE
–HOODS MAY BE INSTALLED WITH DUCTS OR ESP DIRECTLY ON TOP OF HOOD ASSEMBLY
–WHEN A GRILL IS OPERATED UNDER THE HOOD, AN EXTENSION SIDE PANEL (REMOVABLE OR INTEGRAL) MUST BE MOUNTED AT WHICHEVER END(S) OF HOOD IS ADJACENT TO THE GRILLS(S)
–FILTERS SHALL ONLY BE REPLACED WITH FILTERS TEST TO UL 1046 STANDARDS
–FOR USE w/GARLAND MODEL MEWE GRILL OR FOR USE w/TAYLOR MODEL C842 GRILL
–ONLY THE REMOVABLE SIDESKIRTS WILL BE INDIVIDUALLY MARKED AS FOLLOWS: UH SERIES/GRILL/RH OR LH
–THESE HOODS ARE LISTED FOR COMPLIANCE WITH ICBO, BOCA, AND SBCCI PER NER-320
–THESE HOODS MUST BE INSTALLED PER NFPA-96

Intertek
4001095
EXHAUST HOOD WITHOUT
EXHAUST DAMPERS (COA #5535)

DETAIL

UL LABEL
SCALE: NONE

1
M2.0

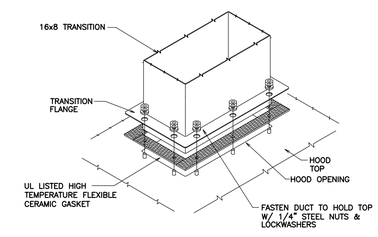

DETAIL

HOOD CONNECTION
SCALE: NONE

2
M2.0

DRAWING NOTES

1. 16 GA. STAINLESS STEEL MATERIAL USED FOR HOOD CONSTRUCTION
2. FILTER BAFFLE:
   UL FILE R14372, VOL. 1, SEC. 1
   UL CONTROL NUMBER 5L65
   MEA-446-92-M
3. EXHAUST HOOD:
   UL FILE MH12755, VOL. 4
   UL CONTROL NUMBER 78L1
4. UTILITY CHASE AND RACEWAY:
   UL FILE E163328, VOL.1, SEC.3
5. HIGH TEMP GASKET:
   UL FILE MH12755, VOL. 2, SEC. 1, ILL. 9
6. HOOD CONSTRUCTION COMPLIES WITH NSF STANDARD 2
7. HOOD PERFORMANCE TESTED IN ACCORDANCE WITH UL 710
8. UL 300 AND NFPA 17A COMPLIANT R-102 WET CHEMICAL SYSTEM INCLUDED WITH HOOD INSTALLATION
9. ANSUL CONNECTIONS AND STARTUP BY APPROVED ANSUL REPRESENTATIVE
10. REFER TO E3.2 FOR HOOD/FAN INTERLOCK DETAILS

OWNER SELECTED EQUIPMENT WITH MANUFACTURER CUT SHEET FOR INFORMATION PURPOSES ONLY

REV	DATE	DESCRIPTION	BY
-	01/23/20	PERMIT SET	WLW
-	01/13/20	USRD PROGRESS SET REVIEW	WLW

emanuelson-podas
consulting engineers
Emanuelson-Podas, Inc.
705 Bush Lake Road
Eden Prairie, MN 55344
(952) 930-0050 | www.epinc.com

3801.0037

MICHAEL WEBERT LICENSED 17648 KANSAS PROFESSIONAL ENGINEER

PREPARED BY: 01/23/20

PREPARED FOR: McDonald's USA, LLC

© 2020 McDonald's USA, LLC

These drawings and specifications are the confidential and proprietary property of McDonald's USA, LLC and shall not be copied or reproduced without written authorization. The contract documents were prepared for use on this specific site in conjunction with its issue date and are not suitable for use on other projects or sites. Use of reuse of these drawings for reference or example on another project requires the services of properly licensed architects and engineers. Reproduction of the contract documents for reuse on another project is not authorized.

DRAWN BY: MJW
STD ISSUE DATE 2019_11
REVIEWED BY WLW
DATE ISSUED 01-23-20
RO#19175

TITLE: 2019 STANDARD BUILDING – BB20 4597F10-WOOD/WOOD
DESCRIPTION: WOOD BEARING WALLS W/FIBER CEMENT SIDING & CI WOOD ROOF TRUSS FRAMING FIBER CEMENT PANEL/BATTEN/ALPOLIC PANEL/BRICK EXT. FINISH
SITE ID: 015-0071
SITE ADDRESS: 605 SOUTH 7TH STREET, KANSAS CITY, KS

SHEET NO. 015-0071.00.0
M2.0
EXHAUST HOODS

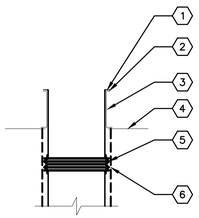

KEYED NOTES:
1. SHEET METAL DUCT DROP (SUPPLY, RETURN OR EXHAUST)
2. FOAM GASKET BETWEEN DUCT AND CURB
3. ROOF CURB
4. ROOF LINE
5. 6" FACE–TO–FACE CANVAS FLEXIBLE CONNECTION
6. 2" EXTERIOR INSULATION (SUPPLY AND RETURN)

DETAIL 1 / M3.0
DUCT DROP INSTALLATION
SCALE: NONE

DETAIL 2 / M3.0
NOT USED

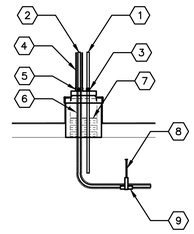

KEYED NOTES:
1. REFRIGERANT LIQUID LINE
2. REFRIGERANT SUCTION LINE WITH 2" THICK EXTERNAL FOAM INSULATION (ARMAFLEX BY ARMACELL OR EQUAL)
3. STAINLESS STEEL CLAMP
4. APPLY WEATHERPROOFING OVER FOAM INSULATION (ALUMAGUARD BY POLYGUARD OR EQUAL)
5. WRAP FOAM INSULATION OVER PIPE PORTAL NIPPLE AND STAINLESS STEEL CLAMP
6. RESTART FOAM INSULATION IMMEDIATELY AFTER PIPE PORTAL PENETRATION
7. INSULATE BOTTOM OF ROOF PORTAL CURB (MIN. R–19)
8. PIPE HANGER
9. LIGHT GAUGE GALVANIZED STEEL PROTECTIVE SHIELD

DETAIL 3 / M3.0
REFRIGERANT PIPE INSTALLATION
SCALE: NONE

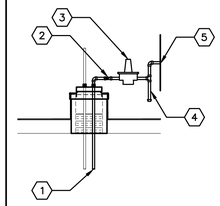

KEYED NOTES:
1. GAS PIPING
2. SHUT–OFF VALVE
3. PRESSURE REGULATOR (PROPERLY SIZED FOR APPLICATION)
4. DIRT LEG
5. ROOFTOP UNIT ENTRY

DETAIL 4 / M3.0
GAS PIPE INSTALLATION
SCALE: NONE

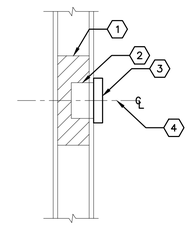

KEYED NOTES:
1. PROVIDE BATT INSULATION FOR TEMPERATURE SENSORS INSTALLED IN HOLLOW CAVITY WALLS
2. 2x4 ELECTRICAL BOX
3. SENSOR (TEMPERATURE, HUMIDITY OR CO2)
4. MOUNT SENSOR(S) BETWEEN 4'–0" TO 4'–6" A.F.F.

DETAIL 5 / M3.0
REMOTE SENSOR INSTALLATION
SCALE: NONE

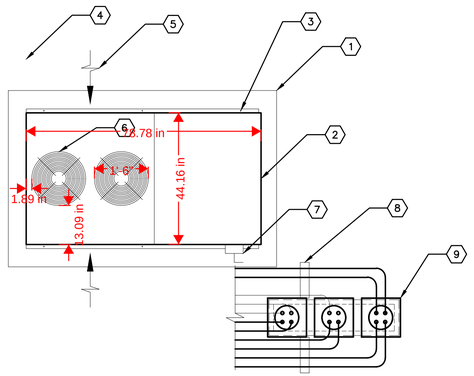

KEYED NOTES:
1. 90"x60"x14"H EQUIPMENT PLATFORM MANUFACTURED BY RPS OR EQUAL
2. 6'–6¾"x3'–8⅝"x2'–9⅞"H CONDENSING UNIT
3. FASTEN CONDENSING UNIT TO TOP OF PLATFORM AND SEAL FASTENER PENETRATIONS WITH UV RESISTANT SEALANT
4. OUTLINE OF SERVICE CLEARANCE EXTENDING 3'–0" FROM CONDENSING UNIT ON ALL SIDES
5. CONDENSER AIR INTAKE (BOTH SIDES)
6. CONDENSER FAN OUTLETS ON TOP OF UNIT
7. DISCONNECT SWITCH FURNISHED WITH UNIT
8. PROVIDE PIPE SUPPORT AS REQUIRED (TREATED LUMBER IS NOT ACCEPTABLE)
9. MULTIPLE PIPE PORTAL MANUFACTURED BY RPS OR EQUAL

CONDUIT SIZES:
(1) ¾" TO EVAPORATORS
(1) ¾" WITH TWO (2) 8 CONDUCTOR LV CLASS II CABLES TO THE EVAPORATORS
(1) ¾" TO ICE MACHINE

REFRIGERANT PIPING SIZES:
SEE MANUFACTURER'S INSTALLATION INSTRUCTIONS FOR RECOMMENDED REFRIGERANT PIPE SIZING

DETAIL 6 / M3.0
BOHN MAC 8X UNIT (CU–4)
SCALE: ½"=1'–0"

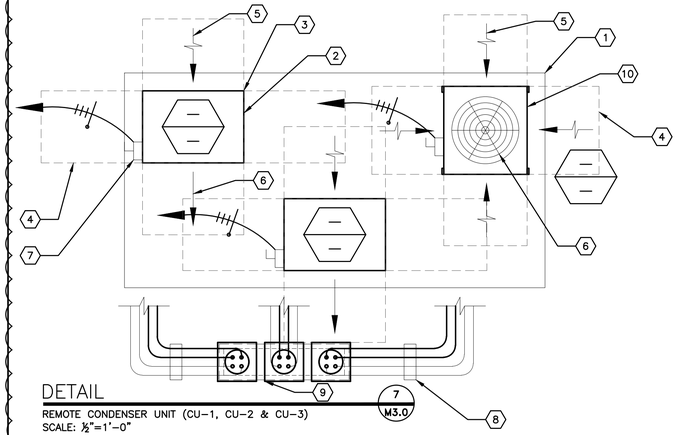

KEYED NOTES:
1. 141"x72"x14"H EQUIPMENT PLATFORM MANUFACTURED BY RPS OR EQUAL
2. 34"x24⅜"x25¾"H CONDENSING UNIT
3. FASTEN CONDENSING UNIT TO TOP OF PLATFORM AND SEAL FASTENER PENETRATIONS WITH UV RESISTANT SEALANT
4. OUTLINE OF SERVICE CLEARANCE EXTENDING FROM CONDENSING UNIT ON ALL SIDES
5. CONDENSER AIR INTAKE
6. CONDENSER FAN OUTLET
7. DISCONNECT SWITCH PROVIDED BY ELECTRICAL CONTRACTOR
8. PROVIDE PIPE SUPPORT AS NECESSARY (TREATED LUMBER IS NOT ACCEPTABLE)
9. MULTIPLE PIPE PORTAL MANUFACTURED BY RPS OR EQUAL
10. 29½"x28"x38"H CONDENSING UNIT

CONDUIT SIZES: (PER CONDENSING UNIT)
(1) ¾" POWER
(1) ¾" CONTROL

REFRIGERANT PIPING SIZES:
(PER CONDENSING UNIT)
ICE MACHINE – ½" LIQUID, ¾" SUCTION
(CU–3 CONDENSING UNIT)
ICE MACHINE – ⅜" LIQUID, ½" SUCTION

DETAIL 7 / M3.0
REMOTE CONDENSER UNIT (CU–1, CU–2 & CU–3)
SCALE: ½"=1'–0"

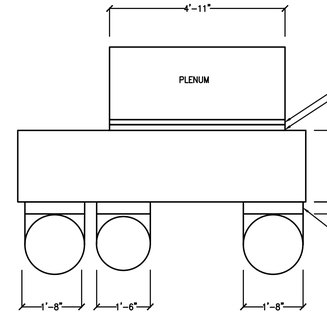

VIEW TOWARDS REAR OF KITCHEN AT DUCT DROPS

DETAIL 8 / M3.0
KITCHEN DUCTWORK
SCALE: NONE

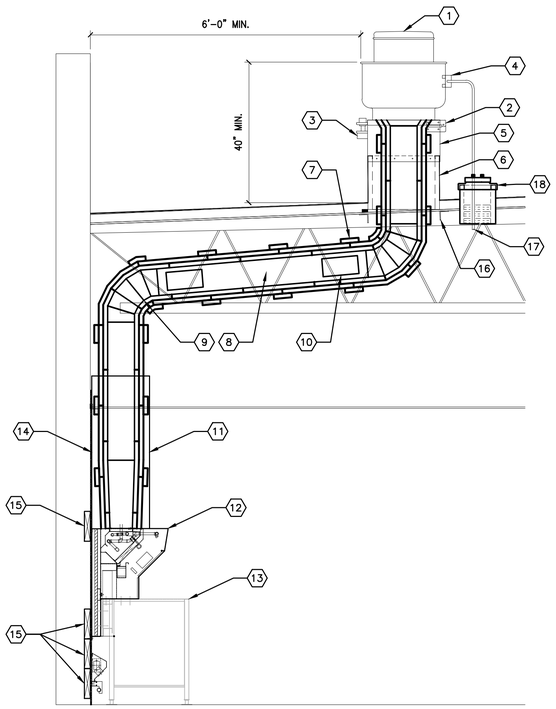

KEYED NOTES:
1. UPBLAST EXHAUST FAN (SEE EXHAUST FAN SCHEDULE)
2. HINGED CURB CAP FOR CLEANING ACCESS (FURNISHED WITH FAN)
3. GREASE TRAP (FURNISHED WITH FAN)
4. NEMA 3R DISCONNECT SWITCH (FURNISHED WITH FAN)
5. 12" HIGH CURB EXTENSION (FURNISHED WITH FAN)
6. 18" HIGH CURB (FURNISHED WITH FAN)
7. TWO (2) LAYERS OF 1½" THICK DUCT WRAP TO MEET ASTM E2336 INSTALLED PER MANUFACTURER'S INSTRUCTIONS (SEE MECHANICAL NOTES FOR INSULATION SPECIFICATION)
8. 16 GAUGE BLACK IRON (CARBON STEEL) OR 18 GAUGE STAINLESS STEEL DUCTWORK WELDED LIQUID–TIGHT
9. 5–GORE BLACK IRON (CARBON STEEL) RADIUS ELBOW
10. 12"x6" ACCESS DOOR AT ALL CHANGES IN DIRECTION
11. STAINLESS STEEL FASCIA PANEL TO PROTECT DUCTWORK AND INSULATION
12. BACKSHELF TYPE EXHAUST HOOD (SEE KITCHEN EXHAUST HOOD SCHEDULE)
13. COOKING APPLIANCE (SEE KITCHEN DRAWINGS)
14. REAR WALL CONSTRUCTION SHALL CONSIST OF CERAMIC TILE OR MIN. 22 GAUGE STAINLESS STEEL OVER ⅝" TYPE X GYPSUM BOARD OR ½" CEMENT BOARD FROM FLOOR TO CEILING AND EXTENDING 24" TO EACH SIDE OF THE HOOD INSTALLED ON NON–COMBUSTIBLE WALL (REFER TO SHEET A1.0 FOR MORE INFORMATION.
15. 2x10 LIGHT GAUGE STEEL FOR SUPPORT BLOCKING FOR HOOD AND RACEWAY (COORDINATE INSTALLATION WITH HOOD INSTALLER)
16. STRUCTURAL FRAMING FOR ROOF OPENING (SEE STRUCTURAL DRAWINGS)
17. TRANSITION TO FLEXIBLE CONDUIT UNDER ROOF PENETRATION WHERE ALLOWED BY CODE.
18. ROOF PIPE PORTAL, RPS–N18(1) RC–2A 12x12x11H.

SECTION 9 / M3.0
KITCHEN EXHAUST HOOD INSTALLATION
SCALE: ½"=1'–0"

KEYED NOTES:
1. OUTLINE OF ROOFTOP UNIT
2. ROOF CURB
3. SUPPLY AND RETURN AIR DUCT DROPS
4. ROOF OPENING

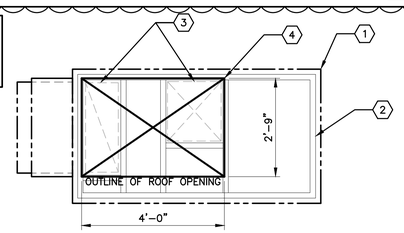

RTU–2 (6–TONS)

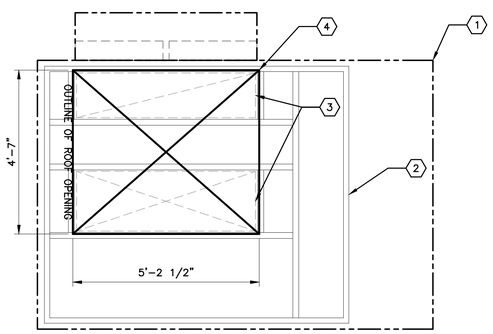

RTU–1 (20 TONS) &
RTU–3 (13–TONS)

DETAIL 10 / M3.0
ROOF OPENINGS
SCALE: ½"=1'–0"

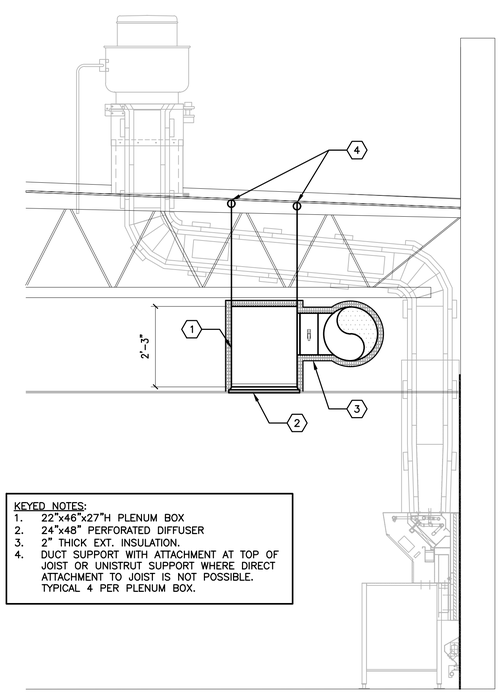

KEYED NOTES:
1. 22"x46"x27"H PLENUM BOX
2. 24"x48" PERFORATED DIFFUSER
3. 2" THICK EXT. INSULATION.
4. DUCT SUPPORT WITH ATTACHMENT AT TOP OF JOIST OR UNISTRUT SUPPORT WHERE DIRECT ATTACHMENT TO JOIST IS NOT POSSIBLE. TYPICAL 4 PER PLENUM BOX.

SECTION 11 / M3.0
SUPPLY (S–1) PLENUM INSTALLATION
SCALE: ½"=1'–0"

REV	DATE	DESCRIPTION	BY
A	12/03/20	SERVICE AREA OPTIMIZATION	WLW
-	11/13/20	USRD SAO SET REVIEW	WLW
B	05/05/20	CIVIL & PLAN REVIEW COMMENTS	WLW
-	01/23/20	PERMIT SET	WLW
-	01/13/20	USRD PROGRESS SET REVIEW	WLW

PREPARED BY:
emanuelson-podas
consulting engineers
Emanuelson-Podas, Inc.
705 Bush Lake Road
Eden Prairie, MN 55347
(952) 930-0050 | www.epinc.com
3801.0037
MICHAEL WEBERT LICENSED 17648 KANSAS PROFESSIONAL ENGINEER
12/03/20

PREPARED FOR:
McDonald's USA, LLC

© 2020 McDonald's USA, LLC
These drawings and specifications are the confidential and proprietary property of McDonald's USA, LLC and shall not be copied or reproduced without written authorization. The contract documents were prepared for use on this specific site in conjunction with its issue date and are not suitable for use on another site. Any reuse of, or derivatives of these drawings for reference or example on another project requires the services of properly licensed architects and engineers. Reproduction of the contract documents for reuse on another project is not authorized.

DRAWN BY: MJW
STD ISSUE DATE: 2019_11
REVIEWED BY: WLW
DATE ISSUED: 01-23-20
RQ#19175

TITLE: 2019 STANDARD BUILDING – BB20
4597F10–WOOD/WOOD

DESCRIPTION:
WOOD BEARING WALLS W/FIBER CEMENT SIDING & CI
WOOD ROOF TRUSS FRAMING
FIBER CEMENT PANEL/BATTEN/ALPOLIC PANEL/BRICK EXT. FINISH

SITE ID: 015–0071
SITE ADDRESS: 605 SOUTH 7TH STREET, KANSAS CITY, KS

SHEET NO. 015–0071.00.B
M3.0
DETAILS

MECHANICAL NOTES

GENERAL:

1. ALL WORK PERFORMED SHALL BE IN ACCORDANCE WITH ALL LOCAL CODES AND ACCEPTABLE TO THE AUTHORITY HAVING JURISDICTION.
2. ALL DIMENSIONS, CLEARANCES AND TOLERANCES SHALL BE VERIFIED PRIOR TO INSTALLATION.
3. ALL MATERIALS, FIXTURES AND EQUIPMENT USED SHALL BE IN ACCORDANCE WITH McDONALD'S SPECIFICATIONS. SPECIFICATIONS ARE CONTAINED WITHIN THESE DRAWINGS AND THE McDONALD'S PROJECT MANUAL. ANY CONTRACTOR IN NEED OF A COPY OF THE McDONALD'S PROJECT MANUAL SHALL CONTACT THE McDONALD'S AREA CONSTRUCTION MANAGER. ANY VARIANCE FROM THE McDONALD'S SPECIFICATIONS SHALL BE REVIEWED AND APPROVED BY THE ENGINEER–OF–RECORD.
4. ALL EQUIPMENT SHALL BE INSTALLED IN ACCORDANCE WITH ITS LISTING AND/OR THE MANUFACTURER'S INSTALLATION INSTRUCTIONS.
5. SEE COORDINATION SCHEDULE FOR ADDITIONAL SCOPE OF WORK.
6. PRIOR TO BUILDING TURNOVER, A COMPLETE START–UP, TEST, ADJUST AND BALANCE SHALL BE PERFORMED ON ALL MECHANICAL SYSTEMS. THIS WORK SHALL BE PERFORMED BY A CERTIFIED TEST AND BALANCE CONTRACTOR. A CERTIFIED TEST AND BALANCE CONTRACTOR CAN BE FOUND BY VISITING:
   HTTP://WWW.AABCHQ.COM/DIRECTORY
   HTTP://WWW.NEBB.ORG/DIRECTORY.HTM
   HTTP://WWW.TABBCERTIFIED.ORG/SITE/CONTENT/CONTRACTORS/SEARCH
7. UPON COMPLETION OF THE PUNCHLIST, THE MECHANICAL CONTRACTOR AND TEST AND BALANCE CONTRACTOR SHALL SUBMIT REDLINED OR AS–BUILT DRAWINGS ALONG WITH THE TEST AND BALANCE REPORT AND ALL EQUIPMENT OPERATION AND MAINTENANCE MANUALS TO THE McDONALD'S AREA CONSTRUCTION MANAGER. A MINIMUM OF TWO (2) COPIES SHALL BE PROVIDED, ONE (1) FOR REGIONAL RECORDS AND ONE (1) FOR THE RESTAURANT.
8. ALL PENETRATIONS OF FIRE–RATED WALLS SHALL BE FIRESTOPPED WITH AN APPROVED AND LISTED FIRESTOPPING SYSTEM.

VENTILATION SYSTEMS:

1. ALL SHEET METAL DUCTWORK SHALL BE FABRICATED AND INSTALLED IN ACCORDANCE WITH LOCAL CODES AND SMACNA STANDARDS.
2. ALL DUCTWORK DIMENSIONS ARE INTERNAL FREE AREA DIMENSIONS AND SIZED FOR 0.1" W.C. PER 100 FT. OF DUCT.
3. ALL SHEET METAL DUCTWORK SHALL BE CONSTRUCTED IN ACCORDANCE WITH SMACNA TABLES FOR 2" W.C. AND SHALL BE SUPPORTED WITH AN APPROVED HANGER AT INTERVALS NOT EXCEEDING 10 FT.
4. ALL DUCT DROPS INTO THE BUILDING SHALL BE INSTALLED WITH FLEXIBLE CONNECTIONS TO ISOLATE THE DUCTWORK SYSTEM FROM NOISE AND VIBRATION. FLEXIBLE CONNECTIONS SHALL BE TESTED IN ACCORDANCE WITH UL 181 AND LISTED AS CLASS 0 OR CLASS 1.
5. ALL DUCT DROPS INTO THE BUILDING SHALL BE OFFSET AS NECESSARY TO ALLOW FOR THE CLEAR INSTALLATION OF THE EXTERNAL DUCTWORK INSULATION.
6. ALL DUCTWORK BRANCHES SHALL BE SUPPLIED WITH A VOLUME DAMPER FOR BALANCING. VOLUME DAMPER SHALL HAVE A 2" OFFSET TO ACCOMMODATE EXTERNAL INSULATION.
7. TAKE–OFFS FROM RECTANGULAR TO ROUND DUCT SHALL BE DUCTMATE STRAIGHT–SIDED OR CENTER HIGH–EFFICIENCY TAKE–OFFS WITH A 2" DAMPER STAND–OFF TO ACCOMMODATE FOR EXTERNAL INSULATION.
8. ALL DUCTWORK JOINTS, LONGITUDINAL AND TRANSVERSE SEAMS SHALL BE SEALED WITH WELDS, GASKETS, MASTICS (ADHESIVES), TAPES, ETC. ALL SEALANT MATERIALS SHALL BE LISTED IN ACCORDANCE WITH UL 181A OR 181B.
9. ALL SUPPLY AND RETURN SHEET METAL DUCTWORK LOCATED WITHIN THE CEILING SPACE SHALL BE EXTERNALLY INSULATED. INSULATION SHALL BE 2" THICK MICROLITE XG–100 BY JOHNS MANVILLE OR EQUAL.
10. ALL SUPPLY AND RETURN SHEET METAL DUCTWORK LOCATED OUTSIDE OF THE BUILDING SHALL BE INTERNALLY LINED WITH A 1" THICK FIBERGLASS (MIN. R–4.2) AND EXTERNALLY INSULATED WITH A 1½" THICK RIGID POLYSTYRENE, POLYURETHANE OR POLYISOCYANURATE BOARD (MIN. R–7.5). INTERNAL FIBERGLASS INSULATION SHALL BE LINATEX BY JOHNS MANVILLE OR EQUAL. EXTERNAL RIGID BOARD INSULATION SHALL BE THERMAPINK BY OWENS CORNING OR EQUAL.
11. ALL EXPOSED SPIRAL DUCTWORK SHALL BE INTERNALLY INSULATED TO PREVENT CONDENSATION (MIN. R–4.3). INTERNAL INSULATION SHALL BE 1" THICK SPIRACOUSTIC PLUS BY JOHNS MANVILLE OR EQUAL.
12. ALL DUCTWORK PENETRATIONS THROUGH FIRE–RATED WALLS, BARRIERS OR PARTITIONS SHALL BE PROTECTED WITH A FIRE DAMPER. THE PERIMETER OF THE FIRE DAMPER SHALL BE FIRESTOPPED WITH AN APPROVED AND LISTED FIRESTOPPING MATERIAL.
13. ALL EXTERIOR SHEET METAL DUCTWORK SHALL BE EXTERNALLY WRAPPED WITH AN APPROVED WEATHERPROOFING MATERIAL TO PROTECT AGAINST WATER PENETRATION AND CORROSION. SIDES AND TOP OF EXTERNAL WEATHERPROOFING SHALL BE ALUMAGUARD 60 MIL UV BARRIER BY POLYGUARD OR EQUAL. BOTTOM OF EXTERNAL WEATHERPROOFING SHALL BE VAPORGUARD 5 MIL MEMBRANE BY POLYGUARD OR EQUAL.
14. ALL FLEXIBLE DUCTWORK, METALLIC AND NONMETALLIC, SHALL CONFORM TO THE FOLLOWING:
    A. 2" THICK INSULATION (R–6.0)
    B. INTEGRAL VAPOR BARRIER
    C. LISTED AND LABELED UL 181, CLASS 0 OR CLASS 1
    D. INSTALLED IN ACCORDANCE WITH:
       i. SMACNA STANDARDS,
       ii. AIR DIFFUSION COUNCIL INSTALLATION GUIDELINES, AND/OR
       iii. MANUFACTURER'S INSTALLATION INSTRUCTIONS
14. FLEXIBLE DUCTWORK SHALL NOT PENETRATE WALLS. SHEET METAL DUCTWORK IS REQUIRED AT ALL FIRE–RATED AND DRAFTSTOP WALL PENETRATIONS.
15. ALL COVERINGS, LININGS AND ADHESIVES (TAPES, ETC.) SHALL HAVE A FLAME–SPREAD INDEX NOT GREATER THAN 25 AND A SMOKE–DEVELOPED INDEX NOT GREATER THAN 50.
16. DUCT–MOUNTED SMOKE DETECTORS SHALL BE INSTALLED IN SYSTEMS WITH DESIGN CAPACITY GREATER THAN 2,000 CFM. SEE MECHANICAL DRAWINGS FOR LOCATIONS OF SMOKE DETECTORS. DUCT–MOUNTED SMOKE DETECTORS ARE NOT REQUIRED WHEN THE BUILDING IS PROTECTED THROUGHOUT BY AREA SMOKE DETECTORS CONNECTED TO A FIRE ALARM SYSTEM WHERE THE FIRE ALARM SYSTEM IS DESIGNED TO SHUT DOWN THE ROOFTOP UNITS.
17. ALL SUPPLY AIR DIFFUSERS SHALL BE INSULATED TO PREVENT CONDENSATION.
18. ALL AIR DEVICES LOCATED IN DRYWALL CEILINGS SHALL BE SUPPLIED WITH AN INTEGRAL VOLUME DAMPER ACCESSIBLE FROM THE AIR DEVICE FACE TO FACILITATE BALANCING.
19. ALL OUTDOOR AIR INTAKES SHALL BE LOCATED A MINIMUM OF 10 FT. HORIZONTALLY FROM ANY SOURCE OF CONTAMINATION SUCH AS EXHAUST FANS, PLUMBING VENTS, WATER HEATER FLUES, ETC. WHERE A CONTAMINANT SOURCE IS LOCATED WITHIN 10 FT. OF AN INTAKE, THE INTAKE OPENING SHALL BE LOCATED A MINIMUM OF 2 FT. BELOW THE CONTAMINANT SOURCE.
20. ALL ROOFTOP CONDENSING UNITS THAT DISCHARGE HORIZONTALLY SHALL BE ORIENTED SUCH THAT THE DISCHARGE DOES NOT BLOW IN THE DIRECTION OF AN OUTDOOR AIR INTAKE.

COMMERCIAL KITCHEN EXHAUST SYSTEMS:

1. ALL METAL DUCTWORK USED FOR THE CONVEYANCE OF GREASE–LADEN AIR SHALL BE CONSTRUCTED OF MINIMUM 18 GAUGE STAINLESS STEEL OR 16 GAUGE CARBON STEEL (BLACK IRON).
2. ALL GREASE EXHAUST DUCTWORK JOINTS SHALL BE EITHER TELESCOPING OR BELL TYPE. BUTT–WELDED JOINTS ARE PROHIBITED.
3. ALL GREASE EXHAUST DUCTWORK SEAMS AND JOINTS SHALL BE CONTINUOUSLY WELDED WATER–TIGHT ON THE EXTERNAL SURFACE OF THE DUCT SYSTEM. ALL WELDING SHALL BE PERFORMED BY A CERTIFIED WELDER.
4. ALL GREASE EXHAUST DUCTWORK SHALL BE EXTERNALLY INSULATED WITH A ASTM E2336 LISTED AND LABELED GREASE DUCT ENCLOSURE SYSTEM. INSULATION SHALL BE INSTALLED IN ACCORDANCE WITH ITS LISTING AND THE MANUFACTURER'S INSTALLATION INSTRUCTIONS.
5. ACCESS PANELS SHALL BE PROVIDED AT ALL CHANGES IN DIRECTION OF THE GREASE EXHAUST DUCTWORK SYSTEM. ACCESS PANELS SHALL BE INSTALLED IN ACCORDANCE WITH THE INSULATION MANUFACTURER'S INSTALLATION INSTRUCTIONS AND SHALL BE LABELED AS FOLLOWS: "ACCESS PANEL – DO NOT OBSTRUCT".
6. ALL HORIZONTAL GREASE EXHAUST DUCTWORK SHALL BE INSTALLED WITH A MINIMUM ¼" PER FOOT SLOPE AND SHALL BE PITCHED BACK TOWARD THE HOOD.
7. UPBLAST KITCHEN EXHAUST FANS SHALL BE LOCATED A MINIMUM OF 6 FT. FROM ANY PARAPET WALL OR ADJACENT STRUCTURE AND SHALL TERMINATE A MINIMUM OF 40 INCHES ABOVE THE FINISHED ROOFING MATERIAL.

REFRIGERANT PIPING:

1. ALL REFRIGERATION WORK SHALL BE PERFORMED BY A CERTIFIED REFRIGERATION CONTRACTOR.
2. ALL REFRIGERANT PIPING SHALL BE SEAMLESS COPPER TUBING OF TYPE L IN ACCORDANCE WITH ASTM B 88 AND ALL JOINTS SHALL BE SOLDERED.
3. ALL REFRIGERANT SUCTION LINES SHALL BE INSULATED WITH A MINIMUM 1" FOAM PIPE INSULATION. PIPE INSULATION INSTALLED OUTDOORS SHALL BE PROTECTED WITH AN APPROVED WEATHERPROOFING MATERIAL.
4. ALL SUSPENDED REFRIGERANT PIPING SHALL BE SUPPORTED AS FOLLOWS:

MATERIAL	MAX. HORIZ. SPACING	MAX. VERT. SPACING
COPPER TUBING ≤1¼"	6 FT.	10 FT.
COPPER TUBING ≥1½"	10 FT.	10 FT.

5. ALL REFRIGERANT PIPING SHALL BE SIZED PER EQUIPMENT MANUFACTURER'S RECOMMENDATIONS.
6. PRE–CHARGED LINESETS ARE NOT PERMITTED AS LINES WILL MOST LIKELY NEED TO BE CUT TO FIT THE APPLICATION AND REFRIGERANT WILL NEED TO BE RECLAIMED.
7. ALL PIPE INSULATION SHALL BE PROTECTED FROM DAMAGE FROM PIPE HANGERS. PROTECTION SHALL BE LIGHT GAUGE GALVANIZED STEEL OR EQUAL.
8. ALL REFRIGERANT PIPING SYSTEMS SHALL BE PRESSURE TESTED FOR LEAKS PRIOR TO START–UP. ALL LEAKS SHALL BE REMEDIED PRIOR TO BUILDING TURNOVER.

CO2 DETECTION EQUIPMENT:

1. THE CO2 DETECTOR SHALL BE HARD–WIRED TO PREVENT TAMPERING AND SHALL BE INSTALLED AT 12" A.F.F. WITHIN A 5 FT. RADIUS OF THE CO2 STORAGE TANKS.
2. ONE (1) AUDIBLE AND ONE (1) VISUAL ALARM SHALL BE INSTALLED A MINIMUM OF 7 FT. A.F.F., IN PLAIN SIGHT IN THE SAME ROOM AS THE CO2 STORAGE TANKS.
3. ONE (1) AUDIBLE AND ONE (1) VISUAL ALARM SHALL BE INSTALLED A MINIMUM OF 7 FT. A.F.F., AT THE BACK OF THE KITCHEN AND IN PLAIN SIGHT FROM THE MAIN SIDE OF THE PREP LINE.

NATURAL GAS SYSTEMS (IF APPLICABLE):

1. ALL GAS PIPING, WATER HEATER VENTS, INTAKES AND FLUES SHALL CONFORM TO THE CURRENT VERSION OF NFPA 54, NATIONAL FUEL GAS CODE, AND ANY LOCAL CODE REQUIREMENTS.
2. THE NATURAL GAS MAIN PIPE SIZING IS BASED ON THE FOLLOWING:
   A. MINIMUM SUPPLY PRESSURE AT THE METER OF 2 PSIG
   B. 1 PSIG PRESSURE DROP FROM METER TO FARTHEST APPLIANCE
   C. 1,000 BTU PER CU. FT. OF NATURAL GAS
3. GAS PIPING RUN–OUTS TO EQUIPMENT ARE SIZED BASED ON THE FOLLOWING:
   A. SUPPLY PRESSURE AT THE REGULATOR OF 10" W.C. (¼ PSIG)
   B. 0.5" W.C. PRESSURE DROP FROM REGULATOR TO FARTHEST APPLIANCE
   C. 1,000 BTU PER CU. FT. OF NATURAL GAS
4. ALL NATURAL GAS PIPE SHALL BE SCHEDULE 40 CARBON STEEL PIPE WITH MALLEABLE IRON FITTINGS AND SHALL BE COMPLY TO ONE OF THE FOLLOWING STANDARDS: ASME B36.10, 10M; ASTM A 53; OR ASTM A 106.
5. NATURAL GAS PRESSURE REGULATORS SHALL BE MAXITROL 325 SERIES OR EQUAL.
6. ALL SUSPENDED STEEL PIPING SHALL BE SUPPORTED AS FOLLOWS:

SIZE	MAX. HORIZ. SPACING	MAX. VERT. SPACING
½"	6 FT.	6 FT.
¾" TO 1"	8 FT.	8 FT.
≥1¼"	10 FT.	10 FT.

7. GAS PIPING SHALL NOT PENETRATE ANY FIRE–RATED CHASE OR SHAFT, DUCTWORK OR PLENUM.
8. ALL NATURAL GAS PIPING INSTALLED OUTDOORS SHALL BE COATED WITH A CORROSION RESISTANT PAINT. PAINT COLOR SHALL BE ORANGE OR YELLOW.
9. ALL INTAKE AND VENT PIPING FOR SEALED–COMBUSTION WATER HEATERS SHALL BE PVC OR ABS, SHALL BE SIZED AND INSTALLED IN ACCORDANCE WITH THE MANUFACTURER'S INSTRUCTIONS AND SHALL BE INSTALLED BY THE PLUMBING CONTRACTOR.
10. ALL WATER HEATER VENTS SHALL BE LOCATED A MINIMUM OF 10 FT. HORIZONTALLY FROM ANY OUTDOOR AIR INTAKE. WHERE A WATER HEATER VENT IS LOCATED WITHIN 10 FT. OF AN INTAKE, THE FLUE OR VENT SHALL TERMINATE A MINIMUM OF 2 FT. ABOVE THE INTAKE.
11. UPON COMPLETION OF INSTALLATION, THE GAS PIPING SYSTEM SHALL BE PURGED OF DELETERIOUS MATERIAL AND SHALL BE PRESSURE TESTED. PRESSURE TESTING SHALL BE PERFORMED WITH THE EQUIPMENT SHUT–OFF VALVES IN THE CLOSED POSITION TO PROTECT EQUIPMENT FROM DAMAGE DUE TO EXCESSIVE PRESSURE.
12. AFTER THE PRESSURE TEST HAS BEEN COMPLETED AND ANY LEAKS REMEDIED, THE INSTALLING CONTRACTOR SHALL MEASURE AND VERIFY THE FOLLOWING GAS PRESSURES WHILE EQUIPMENT IS IN OPERATION:
    A. GRILL – 6" W.C. NATURAL, 14" W.C. L.P.
    B. FRYER – 6" W.C. NATURAL, 14" W.C. L.P.
    C. WATER HEATER – 6" W.C. NATURAL, 14" W.C. L.P.
    D. HVAC UNIT – 6" W.C. NATURAL, 14" W.C. L.P.
13. IF THE MINIMUM PRESSURES ARE NOT MET, THIS SHALL BE IMMEDIATELY REPORTED TO THE MCDONALD'S AREA CONSTRUCTION MANAGER.

CONDENSATE PIPING:

1. CONDENSATE PIPING SHALL BE GALVANIZED STEEL, COPPER OR PVC.
2. PVC PIPE SHALL BE PAINTED WITH WATER BASED LATEX PAINTING TO RESIST DEGRADATION FROM ULTRAVIOLET EXPOSURE.
3. PIPE SUPPORTS SHALL BE RPS MODEL PMP–2 OR EQUAL. QUANTITY AS REQUIRED DEPENDANT UPON PIPING MATERIAL.
4. PIPING SHALL BE SUPPORTED AS FOLLOWS:

MATERIAL	MAX. HORIZ. SPACING	MAX. VERT. SPACING
COPPER PIPE	12 FT.	10 FT.
GALVANIZED STEEL	12 FT.	15 FT.
PVC	4 FT.	15 FT.

5. CONDENSATE PIPING SHALL SLOPE A MINIMUM OF ⅛" PER FOOT.
6. CONDENSATE PIPING SHALL BE SIZED BASED ON THE FOLLOWING:

TOTAL TONS SERVED BY PIPE	MINIMUM PIPE SIZE
<20 TONS	¾"
>20 TONS, <40 TONS	1"
>40 TONS, <125 TONS	1½"

LEGEND

TS	TEMPERATURE SENSOR
ATS	AVERAGING TEMPERATURE SENSOR
CO2	CO2 SENSOR FOR ROOFTOP UNIT DEMAND CONTROL VENTILATION
HS	HUMIDITY SENSOR
T	THERMOSTAT
S	SMOKE DETECTOR
KH 2	EQUIPMENT TAG
R–1 / 1750 CFM / 18"ø	DIFFUSER INFORMATION LINE 1: TAG LINE 2: AIRFLOW LINE 3: NECK SIZE
	SUPPLY AIR DUCT (VERTICAL)
	RETURN OR EXHAUST AIR DUCT (VERTICAL)
	ROUND DUCT (VERTICAL)
SSC	STEADY–STATE SPEED CONTROLLER
	PLAQUE DIFFUSER (SHADED AREA DESIGNATES BLANK–OFF PANEL LOCATION)
	LINEAR SLOT DIFFUSER
	LOUVERED FACE DIFFUSER
	CEILING–MOUNTED EXHAUST FAN
	SPIN–IN COLLAR WITH VOLUME DAMPER
	VOLUME DAMPER
	FLEXIBLE DUCTWORK
	PERFORATED FACE DIFFUSER
	SHEET METAL TEE WITH CAP

ABBREVIATIONS

ACM	AREA CONSTRUCTION MANAGER
B.J.	BELOW JOISTS
BSI	BEVERAGE SYSTEM INSTALLER
DCV	DEMAND CONTROL VENTILATION
E.A.	EXHAUST AIR
EC	ELECTRICAL CONTRACTOR
FAC	FIRE ALARM CONTRACTOR
FOB	FLAT ON BOTTOM
FOT	FLAT ON TOP
FPC	FIRE PROTECTION CONTRACTOR
GC	GENERAL CONTRACTOR
I.D.	INSIDE DIMENSION
KEI	KITCHEN EQUIPMENT INSTALLER
KES	KITCHEN EQUIPMENT SUPPLIER
M.A. (S)	MIXED AIR – SUMMER
M.A. (W)	MIXED AIR – WINTER
MC	MECHANICAL CONTRACTOR
O.A.	OUTDOOR AIR
O.D.	OUTSIDE DIMENSION
O/O	OWNER/OPERATOR
PC	PLUMBING CONTRACTOR
R.A.	RETURN AIR
RC	REFRIGERATION CONTRACTOR
S.A.	SUPPLY AIR
S.P.	STATIC PRESSURE
TAB	TEST AND BALANACE CONTRACTOR

REV	DATE	DESCRIPTION	BY
.	.	.	.
.	.	.	.
.	.	.	.
.	.	.	.
.	01/23/20	PERMIT SET	WLW
.	01/13/20	USRD PROGRESS SET REVIEW	WLW

PREPARED BY:
emanuelson-podas
consulting engineers
Emanuelson-Podas, Inc.
7205 Bush Lake Road
Edina, MN 55439
(952) 930-0050 | www.epinc.com
3801.0037
MICHAEL WEBERT LICENSED 17648 KANSAS PROFESSIONAL ENGINEER
01/23/20

© 2020 McDonald's USA, LLC

PREPARED FOR:
McDonald's USA, LLC

These drawings and specifications are the confidential and proprietary property of McDonald's USA, LLC and shall not be copied or reproduced without written authorization. The contract documents were prepared for use on this specific site in conjunction with its issue date and are not suitable for use at any other site. Any re-use of these documents or these drawings for reference or example on another project requires the services of properly licensed architects and engineers. Reproduction of the contract documents for re-use on another project is not authorized.

DRAWN BY	MJW
STD ISSUE DATE	2019_11
REVIEWED BY	WLW
DATE ISSUED	01–23–20
RQ#19175	

TITLE: 2019 STANDARD BUILDING – BB20
4597F10–WOOD/WOOD

DESCRIPTION: WOOD BEARING WALLS W/FIBER CEMENT SIDING & Ci WOOD ROOF TRUSS FRAMING FIBER CEMENT PANEL/BATTEN/ALPOLIC PANEL/BRICK EXT. FINISH

SITE ID: 015–0071
SITE ADDRESS: 605 SOUTH 7TH STREET, KANSAS CITY, KS

SHEET NO.
015–0071.00.0
M4.0
GENERAL NOTES

COORDINATION SCHEDULE

GENERAL REQUIREMENTS	FURNISH	INSTALL	FINAL CONNECTION	NOTES
MECHANICAL PERMIT	MC			1–3
HOT WORK (WELDING) PERMIT (IF APPLICABLE)	KES			1–3
REFRIGERATION PERMIT (IF APPLICABLE)	MC			1–3
PLUMBING PERMIT	PC			1–3
ELECTRICAL PERMIT	EC			1–3
FIRE SPRINKLER PERMIT (IF APPLICABLE)	FPC			1–3
FIRE ALARM PERMIT (IF APPLICABLE)	FAC			1–3
CONTRACTOR COORDINATION REQUIREMENTS				
HEATING & AIR–CONDITIONING				
ROOFTOP UNITS, INTAKE AND RELIEF	MC	MC		1–5, 17, 22
ROOF CURBS	MC	MC		1–3, 20, 22
GAS PIPING AND GAS PIPE KIT	PC	PC	PC	1–3, 14, 22–23
CONTROLS WIRING	MC	EC	EC	1–3, 19, 22, 24
POWER WIRING	EC	EC	EC	1–3, 19, 22, 24
CONDENSATE TRAP	MC	PC		1–3, 22–23
CONDENSATE PIPING (IF APPLICABLE)	PC	PC		1–3, 22–23
DUCT–MOUNTED SMOKE DETECTOR	MC	MC	EC	1–3, 22, 24
GENERAL EXHAUST SYSTEMS				
EXHAUST FANS	MC	MC		1–3, 17, 22
ROOF CURBS	MC	MC		1–3, 22
CONTROLS (WHERE APPLICABLE)	MC	EC	EC	1–3, 22, 24
POWER WIRING	EC	EC	EC	1–3, 22, 24
TEMPERATURE CONTROLS				
THERMOSTATS & SUBBASES	MC	MC	EC	1–3, 22, 24
REMOTE SENSORS (RH AND/OR TEMPERATURE)	MC	MC	EC	1–3, 22, 24
CONTROLS WIRING (WHERE APPLICABLE)	MC	EC	EC	1–3, 22, 24
POWER WIRING	EC	EC	EC	1–3, 22, 24
DUCTWORK AND ACCESSORIES				
GALVANIZED SHEET METAL DUCTWORK	MC	MC		1–3, 22
EXTERNAL INSULATION	MC	MC		1–3, 22
INTERNAL INSULATION (IF APPLICABLE)	MC	MC		1–3, 22
WEATHERPROOFING (IF APPLICABLE)	MC	MC		1–3, 22
SPIN–IN COLLARS	MC	MC		1–3, 22
FLEXIBLE DUCTWORK	MC	MC		1–3, 22
VOLUME/BALANCING DAMPERS	MC	MC		1–3, 22
FIRE DAMPERS (IF APPLICABLE)	MC	MC		1–3, 22
FIRESTOPPING (IF APPLICABLE)	MC	MC		1–3, 22
AIR DEVICES AND ACCESSORIES	MC	MC	MC	1–3, 7, 22, 28
PLUMBING SYSTEMS				
WATER HEATERS	PC	PC	PC	1–3, 11–12, 23
HOT AND COLD WATER PIPE	PC	PC	PC	1–3, 23
VENTS AND INTAKES	PC	PC	PC	1–3, 23
THERMOSTATIC MIXING VALVE	PC	PC	PC	1–3, 23
POWER AND CONTROL WIRING	EC	EC	EC	1–3, 23–24
KITCHEN EXHAUST SYSTEMS				
McDONALD'S BACKSHELF EXHAUST HOODS	KES	KEI		1–3, 6, 22, 27
CANOPY EXHAUST HOODS (IF APPLICABLE)	KES	KEI		1–3, 6, 22, 27
BLACK IRON DUCTWORK	KES	KEI		1–3, 6, 22
STAINLESS STEEL DUCTWORK (IF APPLICABLE)	KES	KEI		1–3, 6, 22
ALUMINUM DUCTWORK (IF APPLICABLE)	KES	KEI		1–3, 6, 22
UL LISTED DUCT WRAP	MC	MC		1–3, 6, 22
FIRE–RATED DUCT ENCLOSURE (IF APPLICABLE)	GC	GC		1–3, 6, 20, 22
EXHAUST FANS	MC	MC		1–3, 6, 17, 22
ROOF CURBS	MC	MC		1–3, 6, 20, 22
CURB EXTENSIONS	MC	MC		1–3, 6, 22
CONTROLS (WHERE APPLICABLE)	EC	EC	EC	1–3, 6, 22, 24
POWER WIRING	EC	EC	EC	1–3, 6, 22, 24
FIRE SUPPRESSION SYSTEM	KES	KES	KES	1–3, 16, 22, 27
KITCHEN EQUIPMENT				
COOLER/FREEZER	KES	GC		1–3, 27
EVAPORATOR COILS	KES	MC		1–3, 27
CONDENSATE PIPING	PC	PC	PC	1–3, 23, 27
REMOTE CONDENSING UNIT (MAC)	KES	MC		1–3, 22, 27
ROOF CURBS	MC	MC		1–3, 22
REFRIGERANT PIPING	KES	MC	MC	1–3, 22, 27
POWER WIRING	EC	EC	EC	1–3, 22, 24, 27
CONTROL WIRING	EC	EC	EC	1–3, 24, 27
PIPE PORTALS	MC	MC		1–3, 22
ICE MACHINES	KES	KEI		1–3, 27
WATER SUPPLY PIPING	KES	KEI	BSI	1–3, 27
REMOTE CONDENSING UNITS	KES	MC		1–3, 22, 27
ROOF CURBS	MC	MC		1–3, 22, 27
REFRIGERANT PIPING	KES	MC	MC	1–3, 22, 27
POWER WIRING	EC	EC	EC	1–3, 22, 24, 27
CONTROL WIRING	KES	EC	EC	1–3, 24, 27
PIPE PORTALS	MC	MC		1–3, 22
GRILLS	KES	KES		1–3, 27
GAS PIPING (IF APPLICABLE)	PC	PC	PC	1–3, 23, 27
POWER WIRING	EC	EC	EC	1–3, 24, 27
CONTROL CABLE (6' CLAMSHELL ONLY)	MC	EC	EC	1–3, 23, 24, 27
FRYERS	KES	KES		1–3, 27
GAS PIPING (IF APPLICABLE)	PC	PC	PC	1–3, 23, 27
POWER WIRING	EC	EC	EC	1–3, 24, 27
3–COMPARTMENT SINK	KES	KES		1–3, 12, 27
FAUCETS AND PRE–RINSE SPRAYER	KES	KES		1–3, 27
WATER SUPPLY PIPING	PC	PC	PC	1–3, 23, 27
SANITARY DRAIN PIPING	PC	PC	PC	1–3, 23, 27
HAND SINKS	PC	PC		1–3, 23, 27
FAUCET	PC	PC		1–3, 23, 27
WATER SUPPLY PIPING	PC	PC	PC	1–3, 23, 27
SANITARY DRAIN PIPING	PC	PC	PC	1–3, 23, 27
VEGETABLE SINK	KES	KES		1–3, 23, 27
FAUCET	KES	KES		1–3, 23, 27
WATER SUPPLY PIPING	PC	PC	PC	1–3, 23, 27
SANITARY DRAIN PIPING	PC	PC	PC	1–3, 23, 27
WASHING MACHINE	KES	KES		1–3, 23, 27
WATER SUPPLY PIPING	PC	PC	PC	1–3, 23, 27
SANITARY DRAIN PIPING	PC	PC	PC	1–3, 23, 27
WARE WASHER	KES	KES		1–3, 23, 27
WATER SUPPLY PIPING	PC	PC	PC	1–3, 23, 27
SANITARY DRAIN PIPING	PC	PC	PC	1–3, 23, 27
MISCELLANEOUS ITEMS				
FIRE SPINKLER SYSTEMS	FPC	FPC	FPC	1–3, 15, 25
HVAC EQUIPMENT START–UP	MC			1–3, 22
TEST, ADJUST AND BALANCE HVAC SYSTEMS	TAB			1–3, 22
DOOR GRILLES (IF APPLICABLE)	MC	GC		1–3, 20, 22
ROOF/WALL OPENINGS	GC			1–3, 20–24
APPLIANCE BACKFLOW PREVENTION	KES/BSI	PC	PC	1–3, 23, 27
CO2 DETECTION SYSTEM	MC	EC	EC	1–3, 22, 27

NOTES:

1. THIS SCHEDULE IS INTENDED AS A GUIDE FOR THE WORK TO BE PERFORMED. ALL WORK SHALL BE COORDINATED BETWEEN THE McDONALD'S AREA CONSTRUCTION MANAGER AND ALL GC AND O/O SUBCONTRACTORS.
2. ONE (1) COPY OF THE DECOR PACKAGE DRAWINGS SHALL BE SUPPLIED TO THE GENERAL CONTRACTOR AND EACH OF THE SUBCONTRACTORS. IT SHALL BE THE RESPONSIBILITY OF THE GENERAL CONTRACTOR AND THE SUBCONTRACTORS TO INSURE THAT THEY HAVE RECEIVED THE DECOR PACKAGE DRAWINGS.
3. FOR ANY WORK NOT CLARIFIED IN THIS SCHEDULE OR IN THE NOTES AND SPECIFICATIONS, PLEASE CONSULT THE McDONALD'S AREA CONSTRUCTION MANAGER FOR SCOPE OF WORK.
4. ALL ROOFTOP UNIT EQUIPMENT SUPPLIED BY THE MECHANICAL CONTRACTOR AND THE KITCHEN EQUIPMENT SUPPLIER SHALL BE ON SITE AT THE SAME TIME FOR A SINGLE CRANE LIFT. EQUIPMENT SITE ARRIVAL DATE SHALL BE COORDINATED BETWEEN THE AREA CONSTRUCTION MANAGER, MECHANICAL CONTRACTOR AND KITCHEN EQUIPMENT SUPPLIER.
5. ALL ROOFTOP UNITS INSTALLED IN McDONALD'S RESTAURANTS SHALL BE HIGH EFFICIENCY EQUIPMENT. THE INSTALLATION OF STANDARD EFFICIENCY ROOFTOP UNITS IS PROHIBITED.
6. ALL KITCHEN EQUIPMENT REQUIRING EXHAUST SHALL BE INSTALLED IN ACCORDANCE WITH THESE PLANS. ANY VARIATION FROM THESE PLANS SHALL BE REPORTED TO THE AREA CONSTRUCTION MANAGER AND THE ENGINEER–OF–RECORD.
7. WHERE GYPSUM BOARD CEILINGS ARE INSTALLED, THE MECHANICAL CONTRACTOR SHALL SUPPLY DRYWALL MOUNTING FRAMES FOR LAY–IN TYPE DIFFUSERS.
8. ALL WORK SHOWN ON P1.6 DRAWING(S) SHALL BE COMPLETED BY THE BEVERAGE SYSTEM INSTALLER (OR K.E.S.) UNLESS OTHERWISE NOTED IN THE PLUMBING DRAWINGS.
9. ALL WORK ON P1.0 & P1.2 DRAWING(S) SHALL BE BY THE PLUMBING CONTRACTOR.
10. THE BEVERAGE SYSTEM INSTALLER FURNISHES, RUNS AND CONNECTS ALL FLEXIBLE WATER AND SYRUP LINES FOR ALL AFFECTED EQUIPMENT INCLUDING THE FOLLOWING:
    A. HOT CHOCOLATE
    B. COFFEE BREWER
    C. ICE MACHINE
    D. O.J.
    E. SODA TOWERS
11. ALL WATER HEATERS INSTALLED IN McDONALD'S RESTAURANTS SHALL BE HIGH EFFICIENCY SEALED–COMBUSTION WATER HEATERS. THE INSTALLATION OF STANDARD EFFICIENCY GRAVITY–VENTED WATER HEATERS IS PROHIBITED.
12. THE AREA CONSTRUCTION MANAGER, PLUMBING CONTRACTOR AND KITCHEN EQUIPMENT SUPPLIER SHALL COORDINATE WHICH 3–COMPARTMENT SINK IS BEING INSTALLED IN THE RESTAURANT. NOTE: THE INSTALLATION OF A POWERSOAK SINK REQUIRES A LARGER WATER HEATER THAN THE STANDARD 3–COMPARTMENT SINK.
13. ALL GAS PIPING FOR COOKING EQUIPMENT SHALL TERMINATE IN THE CEILING PRIOR TO THE INSTALLATION OF THE PIPING CHASE. UPON INSTALLATION OF THE CHASE, THE GAS PIPING SHALL THEN BE CONTINUED IN THE CHASE FOR FINAL CONNECTION TO THE APPLIANCE.
14. ALL GAS PIPING FOR ROOFTOP EQUIPMENT SHALL BE BROUGHT UP THROUGH THE BASE OF THE UNIT TO MINIMIZE ROOF PENETRATIONS. WHERE THIS IS NOT POSSIBLE, THE PLUMBING CONTRACTOR SHALL PROVIDE THE NECESSARY PIPE PORTALS ON ROOF.
15. ALL FIRE PROTECTION DRAWINGS CONTAINED WITHIN THIS SET ARE STRICTLY FOR REFERENCE ONLY. FIRE SPRINKLER DRAWINGS SHALL BE DESIGNED AND PERMITTED BY A FIRE PROTECTION CONTRACTOR.
16. ALL R–102 WET CHEMICAL FIRE SUPPRESSION SYSTEMS FOR TYPE I HOODS SHALL BE DESIGNED AND INSTALLED BY A LOCAL ANSUL AGENT. THE USE OF DRY CHEMICAL SYSTEMS IS PROHIBITED. THE LOCAL ANSUL AGENT CONTRACT IS HANDLED THROUGH THE KITCHEN EQUIPMENT SUPPLIER.
17. ALL ROOFTOP UNITS AND EXHAUST FANS ARE SUPPLIED WITH A FACTORY–INSTALLED DISCONNECT SWITCH.
18. ELECTRICAL CONTRACTOR SHALL PROVIDE DISCONNECT SWITCHES FOR REMOTE CONDENSING UNITS.
19. ALL ELECTRICAL CONDUITS FOR ROOFTOP EQUIPMENT SHALL BE BROUGHT UP THROUGH THE BASE OF THE UNIT TO MINIMIZE ROOF PENETRATIONS. WHERE THIS IS NOT POSSIBLE, THE ELECTRICAL CONTRACTOR SHALL PROVIDE THE NECESSARY PIPE PORTALS ON ROOF.
20. SEE ARCHITECTURAL DRAWINGS FOR ADDITIONAL INFORMATION.
21. SEE STRUCTURAL DRAWINGS FOR ADDITIONAL INFORMATION.
22. SEE MECHANICAL DRAWINGS FOR ADDITIONAL INFORMATION.
23. SEE PLUMBING DRAWINGS FOR ADDITIONAL INFORMATION.
24. SEE ELECTRICAL DRAWINGS FOR ADDITIONAL INFORMATION.
25. SEE FIRE PROTECTION DRAWINGS FOR ADDITIONAL INFORMATION.
26. SEE FIRE ALARM DRAWINGS FOR ADDITIONAL INFORMATION.
27. SEE KITCHEN DRAWINGS FOR ADDITIONAL INFORMATION.
28. SEE DECOR DRAWINGS FOR ADDITIONAL INFORMATION.

AIR DEVICE SCHEDULE

TAG	MANUFACTURER	MODEL	BORDER	SIZE	COLOR	ACCESSORIES	NOTES
S–1	TITUS PRICE	PDR PDDRE	LAY–IN	48x24	WHITE	7	1,2
S–2	TITUS PRICE	OMNI SPD	LAY–IN	24x24	VARIES	4,6,7	1,6,7
S–3	TITUS PRICE	OMNI SPD	LAY–IN	12x12	VARIES	1,2,7	1,3,6
S–5	TITUS PRICE	TBDI–80 TBDI4	LAY–IN	48" (1)¾" SLOT	VARIES	7	1,5,6
R–1	TITUS PRICE	23RL 60L	LAY–IN	24x24	VARIES	3,7	1,6
E–1	TITUS PRICE	23RL 60L	LAY–IN	12x12	WHITE	1,7	1

ACCESSORIES:
1. COMBINATION DAMPER AND EQUALIZING GRID
2. PLASTER FRAME FOR DRYWALL CEILING INSTALLATION
3. SQUARE–TO–ROUND COLLAR CONNECTION
4. BACKPAN INSULATION
5. OPPOSED BLADE DAMPER
6. BLANK–OFF PANEL AS SHOWN ON DUCTWORK PLAN
7. PLASTER FRAME MAY BE NECESSARY – COORDINATE WITH DECOR DRAWINGS
8. 1" FILTER MEDIA

NOTES:
1. SEE PLAN FOR NECK SIZES
2. FABRICATE 46"x22"x27"H PLENUM WITH 14"ø SIDE INLET (SEE DETAIL 10 ON DRAWING M3.0)
3. PROVIDE 1" FIBERGLASS INSULATION FOR DIFFUSER BACKPAN
4. NOT USED
5. GENERAL CONTRACTOR SHALL PROVIDE ADDITIONAL 4 FT. T–BAR FOR DIFFUSER FRAMING
6. AIR DEVICE FINISH WILL VARY:
   * KITCHEN, STORAGE, RESTROOMS – WHITE
   * DINING ROOM, VESTIBULES – WHITE, BLACK OR PAINTABLE/PRIME COAT (COORDINATE FINAL COLOR WITH DECOR PLANS).
7. ADDITIONAL ACCESSORIES AND/OR ALTERNATE DIFFUSERS MAY BE REQUIRED. REFER TO DECOR DRAWINGS TO VERIFY.

AIR CURTAIN SCHEDULE

TAG	MANUFACTURER	MODEL	SERVES	AIRFLOW	ELEC	ACCESS.	NOTES
AC 1	POWERED AIRE	MP 1–30E	CASH BOOTH	VARIABLE	8 KW ⅓ HP	2,3,5–7	1–2
AC 2	POWERED AIRE	MP 1–30E	PRESENTER'S BOOTH	VARIABLE	8 KW ⅓ HP	2,3,5–7	1–2
AC 3	POWERED AIRE	RBT 1–48	STORAGE ENTRANCE	2,559 CFM	MCA: 10 MOCP: 20 ¾ HP	1–4	1,2
AC 4	POWERED AIRE	RBT 1–36	REAR ENTRANCE	2,541 CFM	MCA: 10 MOCP: 20 ¾ HP	1–4	1,2
AC 5	POWERED AIRE	MP 1–30	FORWARD PRESENTER'S BOOTH	VARIABLE	MCA: 5.5 MOCP: 10 ⅓ HP	2–4	1,2

ACCESSORIES:
1. NSF LISTING
2. DOOR SWITCH
3. DELAY TIMER
4. 120V/1ø/60Hz
5. 208V/1ø/60Hz
6. 8 KW ELECTRIC HEATER
7. REMOTE MOUNTED VARIABLE SPEED SWITCH THERMOSTAT.

NOTES:
1. SET DELAY TIMER TO 30 SECONDS

CONTROLS

SYMBOL	DESCRIPTION	MANUFACTURER	MODEL
T	24V THERMOSTAT (ROOFTOP UNITS)	–	–
	120V THERMOSTAT (COMPUTER CLOSET)	HONEYWELL	T651A3018
TS	REMOTE TEMPERATURE SENSOR	–	–
ATS	REMOTE AVERAGING TEMPERATURE SENSOR	–	–
HS	REMOTE HUMIDITY SENSOR	–	–
	BULK CO2 DETECTION SYSTEM	LOGIC02	–

NOTES:
1. FOR TSTAT, TS, HS AND ATS INFORMATION, REFER TO E4.1
2. TO ORDER HONEYWELL EQUIPMENT CALL (800)575–4841
3. SEE KITCHEN DRAWINGS FOR BULK CO2 DETECTION LOCATIONS

KITCHEN HOOD SCHEDULE

GENERAL					AIRFLOW		FILTERS	
TAG	SERVED BY	MANUFACTURER	MODEL	NOTES	CFM	CFM/LF	QTY/SIZE	FPM
KH 1	EXHAUST FAN (EF–1)	FRANKE H&K	UH–122	1–4	1350	166	(5)10x20	263
KH 2	EXHAUST FAN (EF–2)	FRANKE H&K	UH–50	1–4	575	173	(3)10x16	255
KH 3	EXHAUST FAN (EF–3)	FRANKE H&K	UH–43	1–4	480	166	(2)10x20	255

NOTES:
1. HOODS SHALL BE PROVIDED BY THE KES (SEE COORDINATION SCHEDULE)
2. SEE HOOD DRAWINGS FOR CONSTRUCTION DETAILS AND UL INFORMATION
3. REFER TO E3.2 FOR HOOD/FAN INTERLOCK DETAILS
4. CAPTURE JET PLENUMS TO BE INSTALLED ON HOOD, REFER TO K2.1 KITCHEN SCHEDULE.

FAN SCHEDULE

GENERAL						DESIGN				ELECTRICAL				
TAG	MANUFACTURER	MODEL	SERVES	ACCESSORIES	NOTES	CFM	S.P.	BHP	FRPM	VOLTS	Ø	Hz	HP	AMPS
EF 1	GREENHECK	CUE–162 HP–VG7–MCD	KITCHEN HOOD (KH–1)	1–5,14	1,2,6	1350	1.52	0.61	1425	120 TO 10VDC ECM	1	60	¾	3.1
EF 2	GREENHECK	CUE–142 HP–VG5–MCD	KITCHEN HOOD (KH–2)	1–5,14	1,2,6	575	0.79	0.19	1320	120 TO 10VDC ECM	1	60	½	2.6
EF 3	GREENHECK	CUE–142 HP–VG5–MCD	KITCHEN HOOD (KH–3)	1–5,14	1,2,6	480	0.99	0.19	1334	120 TO 10VDC ECM	1	60	½	2.6
EF 4	GREENHECK	G–099–VG4X–QD	DINING RESTROOMS	6–8,14	1,2,5	400	0.50	0.07	1126	120 TO 10VDC ECM	1	60	¼	2.5
EF 5	GREENHECK	SP–A90	DINING ROOM JANITOR'S CLOSET	9–12	1–3,5	75	0.20	–	900	120	1	60	–	0.52
TF 1	GREENHECK	SP–A125	COMPUTER CLOSET	9–12	1–4	100	0.20	–	1100	120	1	60	–	0.79

ACCESSORIES:
1. 2–POLE NEMA 3R DISCONNECT SWITCH FACTORY–WIRED AND MOUNTED TO FAN
2. UL 762 LISTED AND LABELED
3. ROOF CURB MODEL GPF–24–G18 WITH 1" INSULATION
4. CURB EXTENSION INTEGRAL TO MCD FAN PACKAGE
5. HINGED CURB CAP KIT WITH CABLES
6. 120VAC BACKDRAFT DAMPER
7. ROOF CURB MODEL GPF–19–12–G14 WITH 1" INSULATION AND DAMPER TRAY
8. NEMA 1 DISCONNECT SWITCH
9. EXTERNAL STEADY–STATE SPEED CONTROLLER
10. ROUND DUCT CONNECTOR
11. TWO (2) 13W COMPACT FLUORESCENT LAMPS
12. PRISMATIC LENS
13. WINDBAND EXTENSION ON FAN OUTLET
14. VARIGREEN 10VDC ELECTRONICALLY COMMUTATED MOTOR

NOTES:
1. NO SUBSTITUTIONS PERMITTED
2. TO ORDER GREENHECK EQUIPMENT CALL (888)325–6529 OR E–MAIL: MCD@GREENHECK.COM
3. ELECTRICAL CONTRACTOR SHALL PROVIDE DOOR SWITCH FOR LIGHT CONTROL
4. MECHANICAL CONTRACTOR SHALL FURNISH LINE VOLTAGE THERMOSTAT FOR FAN CONTROL. ELECTRICAL CONTRACTOR SHALL INSTALL THERMOSTAT.
5. CONNECT TO TIMECLOCK FOR FAN SHUT–OFF DURING UNOCCUPIED HOURS
6. REFER TO E3.2 FOR HOOD/FAN INTERLOCK DETAILS

ROOFTOP UNIT SCHEDULE

GENERAL				ACCESSORIES																			WEIGHT (LBS)
TAG	MFR.	MODEL	SERVES	1	2	3	4	5	6	7	8	9	10	11	12	13	14	15	16	17	18	19	20	21	
RTU-1	LENNOX	LCH 240 H4B K 1Y	KITCHEN	X		X	X			X		X	O	X	X				X		X	X	X		2,982
RTU-2	LENNOX	LCH 072 H4E E 1Y	SUPPORT	X		X	X			X	X	X	O	X	X				X		X	X	X		1,031
RTU-3	LENNOX	LCH 156 H4B L 1Y	DINING ROOM	X		X	X			X	X	X	O	X	X				X		X	X	X		2,552

X = Required, O = Optional

TAG	AIRFLOW S.A.	E.S.P.	R.A.	O.A.	M.A.(S)	M.A.(W)	COOLING(MBH) TOTAL	SENS	LAT	HEATING (ELEC) COIL	INPUT	OUTPUT	STAGES	CONN	ARI RATING SEER	EER	IEER	MOTOR HP	RPM	ELECTRICAL V	Ph	Hz	MCA	MOCP
RTU-1	7,200	1.40	5,900	1,300	79.3	57.7	238.3	195.0	43.3	45.0	39	133,107	2	1"	0	12	13.2	7.50	1,013	208	3	60	156	175
RTU-2	2,300	1.20	1,900	400	79.2	58.2	78.5	63.7	14.8	15.0	13	44,369	1	1/2"	0	12	13.5	2.00	900	208	3	60	49	50
RTU-3	4,200	1.40	2,870	1,330	82.6	48.5	153.4	115.0	38.3	60.0	52	177,476	2	1"	0	12	13.6	3.00	914	208	3	60	201	225

ACCESSORIES:
1. Diff. Enthalpy Economizer
2. Motorized O.A. Damper (Hawaii Only)
3. Barometric Relief
4. 2" Pleated Filters (MERV 8)
5. Pwr. Exh. (PlayPlace > 12.5 tons only)
6. CO2 Sensor for DCV (PlayPlace only)
7. Humidity Control and High Static Blower Kit
8. Supply Air Tempering
9. Temperature Sensor
10. Combined Temp/Humidity Sensor. See Note 5
11. Disconnect Switch
12. Field Wired 120V Convenience Outlet
13. Stainless Steel Heat Exchanger (M.A. < 45°F)
14. Condenser Coil Protective Coating (within 15 miles of salt water)
15. Evaporator Coil Protective Coating (within 5 miles of salt water)
16. Hail Guards
17. Return Air Smoke Detector
18. Supply Air Smoke Detector
19. 14" High Roof Curb
20. Condensate Drain with P-Trap
21. Float Switch Kit

Notes:
1. No Substitutions Permitted
2. TO ORDER LENNOX EQUIPMENT, CALL (800)367-6285 TO ORDER AND FAX COPY OF SCHEDULE TO (800)453-7290
3. Factory installed disconnect switch not available when MOCP is 200 amps or larger. Verify with manufacturer's documentation.
4. Mechanical Contractor shall install secondary enthalpy sensor in return air duct drop & wire to unit per manufacturers instructions.
5. Verify EMS provider with ACM to determine how dehumidification will be controlled.
6. Provide economizer status alert

REV	DATE	DESCRIPTION	BY
-	-	-	-
-	-	-	-
3	12/03/20	SERVICE AREA OPTIMIZATION	WLW
-	11/13/20	USRD SAO SET REVIEW	WLW
2	05/05/20	CIVIL & PLAN REVIEW COMMENTS	WLW
-	01/23/20	PERMIT SET	WLW
-	01/13/20	USRD PROGRESS SET REVIEW	WLW

emanuelson-podas consulting engineers
Emanuelson-Podas, Inc.
7705 Bush Lake Road
Edina, MN 55439
(952) 930-0050 | www.epinc.com
3801.0037

PREPARED BY: MICHAEL WEBERT, LICENSED 17648, KANSAS PROFESSIONAL ENGINEER
12/03/20

PREPARED FOR: McDonald's USA, LLC

© 2020 McDonald's USA, LLC
These drawings and specifications are the confidential and proprietary property of McDonald's USA, LLC and shall not be copied or reproduced without written authorization. The contract documents were prepared for use on this specific site in conjunction with its issue date and are not suitable for use on any other project. Any re-use of these documents or these drawings for reference or example on another project requires the services of properly licensed architects and engineers. Reproduction of the contract documents for reuse on another project is not authorized.

DRAWN BY: MJW
STD ISSUE DATE: 2019_11
REVIEWED BY: WLW
DATE ISSUED: 01-23-20
R@#19175

TITLE: 2019 STANDARD BUILDING – BB20
4597F10–WOOD/WOOD

DESCRIPTION: WOOD BEARING WALLS W/FIBER CEMENT SIDING & CI WOOD ROOF TRUSS FRAMING FIBER CEMENT PANEL/PATTEN/ALPOLIC PANEL/BRICK EXT. FINISH

SITE ID: 015–0071
SITE ADDRESS: 605 SOUTH 7TH STREET, KANSAS CITY, KS

SHEET NO. 015–0071.00.B
M4.1
SCHEDULES

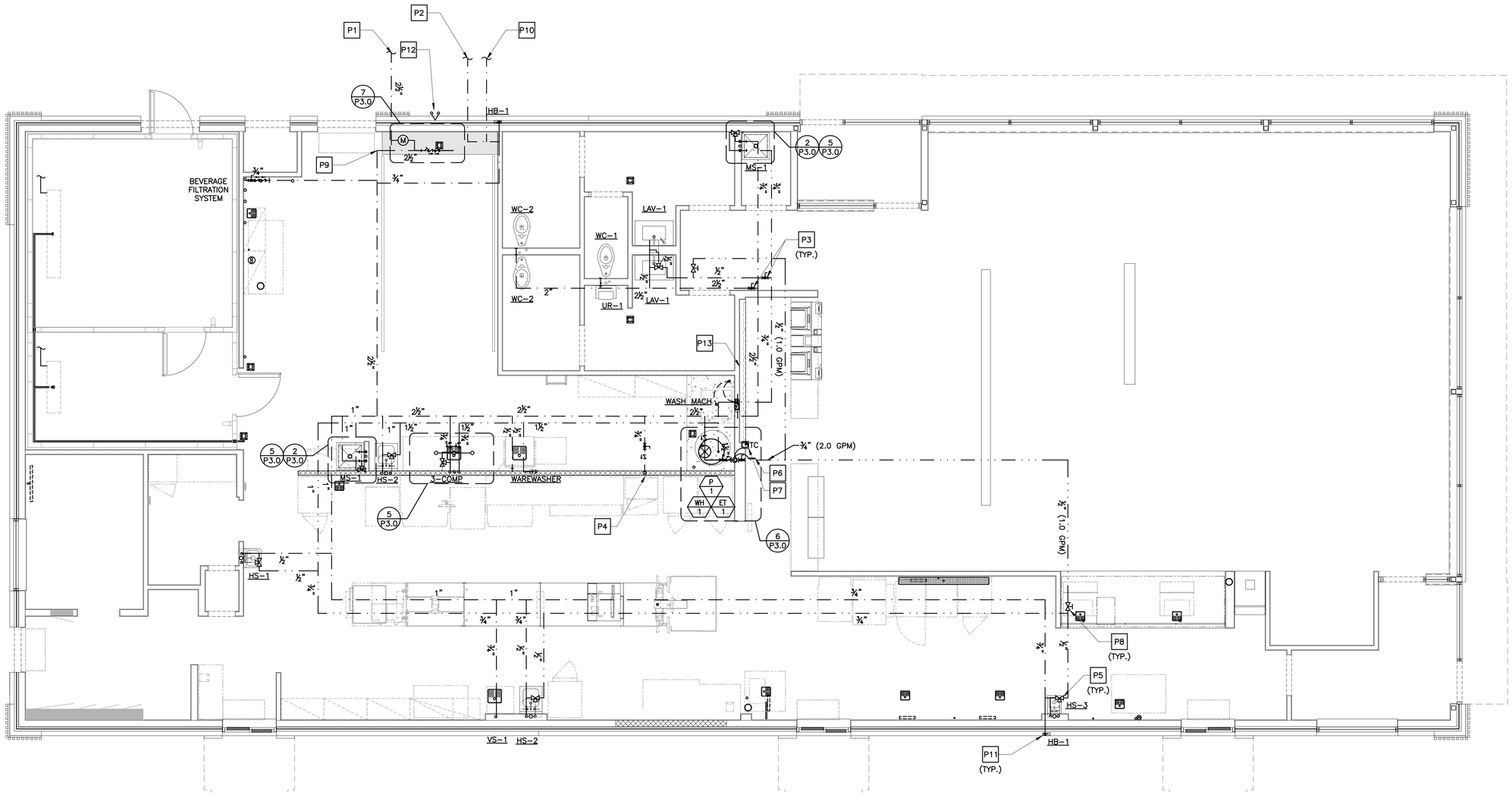

1 / P1.0 DOMESTIC WATER PIPING PLAN
1/4"=1'-0"

DRAWING NOTES

1. PIPING ROUTES AS SHOWN ARE GENERAL AND MAY VARY DUE TO FIELD CONDITIONS. COORDINATE ALL PIPE ROUTES WITH OTHER TRADES.
2. ALL WATER DISTRIBUTION PIPING SHALL BE INSULATED. INSULATION NOT SHOWN FOR CLARITY. SEE PLUMBING NOTES FOR INSULATION REQUIREMENTS.
3. ALL OUTDOOR UTILITIES MOUNTED ON THE WALL MUST BE PAINTED TO MATCH THE BUILDING

DRAWINGS AND SPECIFICATIONS ARE TO BE CONSIDERED AS SUPPLEMENTING EACH OTHER. WORK SPECIFIED BUT NOT SHOWN ON DRAWINGS, OR SHOWN ON DRAWINGS BUT NOT SPECIFIED, SHALL BE PERFORMED OR FURNISHED AS THOUGH MENTIONED IN BOTH SPECIFICATIONS AND DRAWINGS. IF NOT OTHERWISE DIRECTED, INSTALLATION OF ALL SYSTEMS AND EQUIPMENT SHALL BE IN ACCORDANCE WITH APPLICABLE CODES AND IN ACCORDANCE WITH MANUFACTURER'S INSTALLATION INSTRUCTIONS. WHERE WORK DESCRIBED IN THE SPECIFICATIONS IS IN CONFLICT WITH THE WORK SHOWN ON THE DRAWINGS, THE CONTRACTOR SHALL SUPPLY THE GREATER QUANTITY, QUALITY AND COST VIA THE BID AND CONTACT THE ENGINEER FOR CLARIFICATION ON DIRECTION PRIOR TO INSTALLATION.

PRIOR TO BID, THE CONTRACTOR SHALL REVIEW THE MECHANICAL, ELECTRICAL AND KITCHEN EQUIPMENT DRAWINGS. THE CONTRACTOR SHALL INCLUDE IN HIS BID ALL RELEVANT WORK IN THE ENTIRE SET OF DOCUMENTS AND REPORT ALL DISCREPANCIES BETWEEN THESE DRAWINGS TO THE ENGINEER PRIOR TO BIDDING FOR CLARIFICATION. IF DISCREPANCIES REMAIN UNRESOLVED DUE TO A SHORT TIME FRAME, THE CONTRACTOR SHALL INCLUDE THE MOST WORK AND THE HIGHER COSTS IN THE BID. SOLUTIONS TO UNREPORTED DISCREPANCIES WILL BE DETERMINED BY THE ARCHITECT/ENGINEER, WITH NO ADDITIONAL COMPENSATION DUE TO THE CONTRACTOR.

KEYED NOTES

- P1 INCOMING UNDERGROUND WATER SERVICE (SEE SITE PLAN FOR CONTINUATION). WATER PIPING FROM THIS POINT TO CEILING PENETRATION INSIDE BUILDING SHALL BE COPPER.
- P2 COLD WATER UNDERGROUND TO YARD HYDRANT (HB-2) IN TRASH CORRAL. SEE SITE PLAN FOR CONTINUATION.
- P3 SHUT-OFF VALVE FOR RESTROOM AND HOSE BIBB ISOLATION. SEE VALVE SCHEDULE. ALL SHUT-OFF VALVES SHALL BE LOCATED OVER SUSPENDED CEILINGS FOR ACCESSIBILITY. DO NOT LOCATE IN AREAS WITH DRYWALL CEILINGS.
- P4 ¾" COLD WATER UP TO ROOF HYDRANT.
- P5 MIXING VALVE LOCATIONS SHOWN FOR INFORMATIONAL PURPOSES. SEE DETAIL 3 ON DRAWING P3.0 FOR MIXING VALVE INSTALLATION DETAILS.
- P6 PIPE-MOUNTED AQUASTAT TO SHUT PUMP DOWN WHEN RECIRULATION TEMPERATURE REACHES 140°F. SEE DETAIL 6 ON DRAWING P3.0.
- P7 TIME CLOCK TO SHUT PUMP AND WATER HEATER DOWN DURING UNOCCUPIED HOURS. SEE ELECTRICAL DRAWINGS FOR WIRING DETAIL.
- P8 BALANCING VALVE FOR RECIRCULATION SYSTEM. SEE VALVE SCHEDULE. ALL BALANCING VALVES SHALL BE LOCATED OVER SUSPENDED CEILINGS FOR ACCESSIBILITY. DO NOT LOCATE IN AREAS WITH DRYWALL CEILINGS.
- P9 WATER PIPING AFTER CEILING PENETRATION CAN TRANSITION TO CPVC WHERE PERMITTED BY CODE.
- P10 VERIFY IRRIGATION SYSTEM, PROVIDE WATER LINE WITH BACKFLOW PREVENTER, VERIFY EXACT LOCATION WITH LANDSCAPE. 1" SEWER DEDUCT METER AND BACKFLOW ASSEMBLY.
- P11 PROVIDE FREEZE PROOF HYDRANT.
- P12 FIRE DEPARTMENT SIAMESE CONNECTION. SPRINKLER CONTRACTOR SHALL ROUTE LINE IN ACCESSIBLE CEILING SPACE FROM CONNECTION TO FIRE SPRINKLER SERVICE. MAKE ALL CONNECTIONS REQUIRED. VERIFY PIPE SIZE AND LOCATION OF SIAMESE WITH CIVIL AND FIRE MARSHALL. PROVIDED BY OTHERS. COORDINATE LOCATION OF SIAMESE CONNECTION WITH FIRE SPRINKLER SHEETS.
- P13 PROPERLY SEAL ALL PIPE PENETRATIONS THROUGH ANY FIRE WALL(TYP)

SUPPLY PIPE SIZING - UPC

Fixture Type	SIZE	SUPPLY HW	SUPPLY CW	QUANTITY	TOTAL
URINAL	1 IN.	0	20	1	20
WATER CLOSET	1 IN.	0	90	3	90
LAVATORY SINK	1/2 IN.	1	1	2	2
WASH SINK (HAND SINK)	1/2 IN.	2	2	4	8
MOP SINK	3/4 IN.	3	3	2	6
VEGETABLE SINK	3/4 IN.	0	3	1	3
3-COMP SINK	3/4 IN.	3	3	1	3
WASHING MACHINE	3/4 IN.	4	4	1	4
DISH WASHER	3/4 IN.	1.5	1.5	1	3
HOSE BIB	3/4 IN.	0	2.5	4	5.5
LAWN SPRINKLER	1/2 IN.	0	1	4	4
WATER FILTATION SYSTEM	3/4 IN.	0	1	3	3
CLEANING FAUCET	1/2 IN.	2	2	0	0
				TOTAL	151.5

IF YOU HAVE ANY QUESTIONS REGARDING THE PLANS, PLEASE CALL THE DESIGNER.

DESIGNER: Wendy Wenborg
PHONE/FAX: 952-540-4047
EMAIL: wwenborg@epinc.com

REV	DATE	DESCRIPTION	BY
	05/05/20	CIVIL & PLAN REVIEW COMMENTS	WLW
	01/23/20	PERMIT SET	WLW
	01/13/20	USRD PROGRESS SET REVIEW	WLW

emanuelson-podas consulting engineers
Emanuelson-Podas, Inc.
7705 Bush Lake Road
Edina, MN 55439
(952) 930-0050 | www.epinc.com

3801.0037

MICHAEL WEBERT LICENSED 17648 KANSAS PROFESSIONAL ENGINEER

05/05/20

PREPARED BY:

PREPARED FOR: McDonald's USA, LLC

©2020 McDonald's USA, LLC
These drawings and specifications are the confidential and proprietary property of McDonald's USA, LLC and shall not be copied or reproduced without written authorization. The contract documents were prepared for use on this specific site in conjunction with its issue date and are not suitable for use at any other time or place. Re-use of these drawings for reference or example on another project requires the services of properly licensed architects and engineers. Reproduction of the contract documents for re-use on another project is not authorized.

DRAWN BY: MJW
STD ISSUE DATE: 2019_11
REVIEWED BY: WLW
DATE ISSUED: 01-23-20
RO#19175

TITLE: 2019 STANDARD BUILDING – BB20
4597F10-WOOD/WOOD

DESCRIPTION: WOOD BEARING WALLS W/FIBER CEMENT SIDING & CI WOOD ROOF TRUSS FRAMING FIBER CEMENT PANEL/BATTEN/ALPOLIC PANEL/BRICK EXT. FINISH

SITE ID: 015-0071
SITE ADDRESS: 605 SOUTH 7TH STREET, KANSAS CITY, KS

SHEET NO. 015-0071.00.A
P1.0
DOMESTIC WATER PIPING

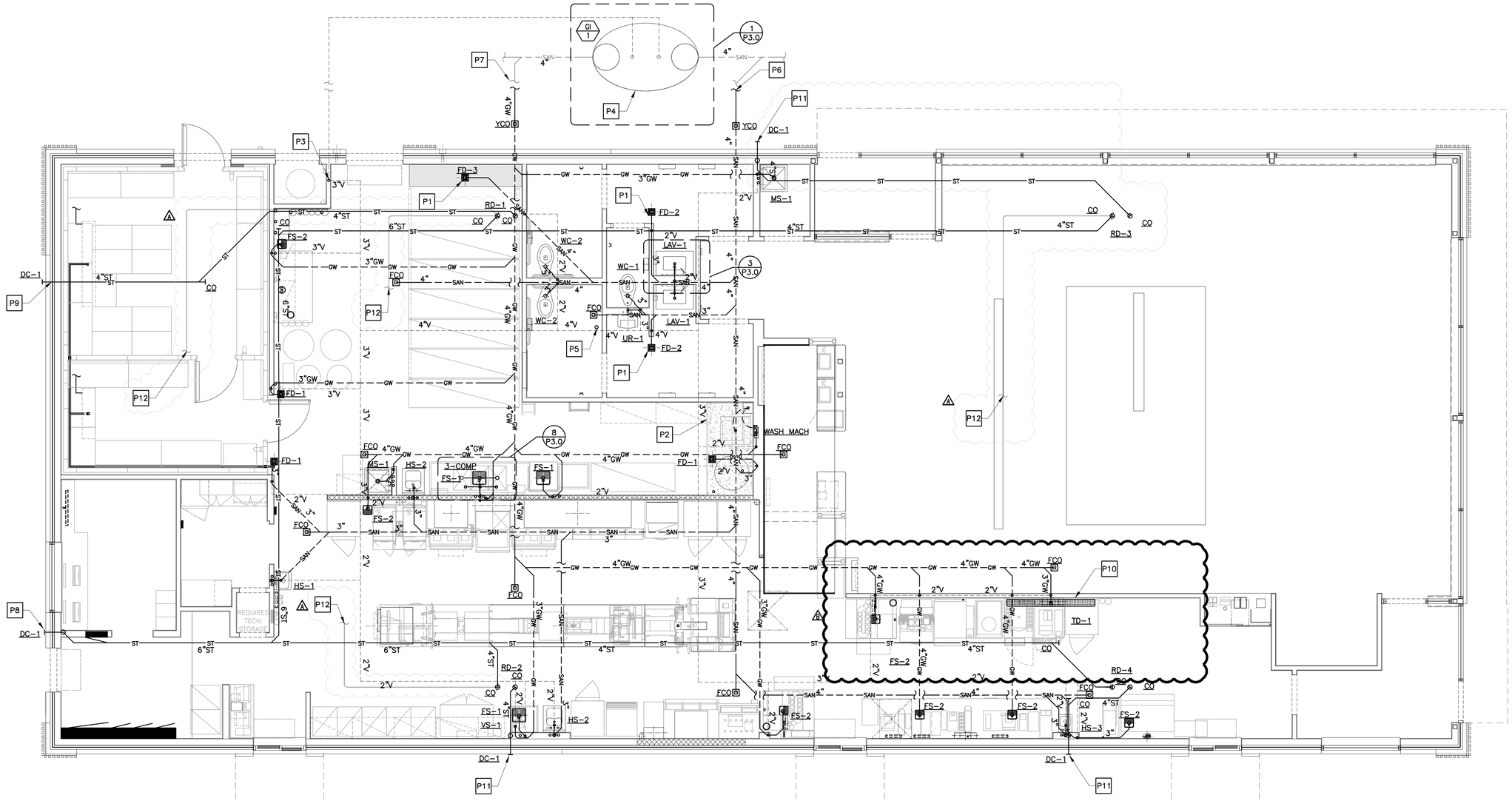

1 P1.2 WASTE & VENT PIPING PLAN
1/4"=1'-0"

DRAWING NOTES

1. PIPING ROUTES ARE GENERAL AND MAY VARY DUE TO FIELD CONDITIONS. COORDINATE ALL PIPE ROUTES WITH OTHER TRADES.
2. WALL CLEAN-OUTS FOR WASTE PIPING NOT SHOWN FOR CLARITY. SEE GENERAL NOTES FOR REQUIREMENTS.
3. ONLY MAIN FLOOR CLEAN-OUTS ARE SHOWN FOR CLARITY. SEE GENERAL NOTES FOR REQUIREMENTS.
4. ALL HORIZONTAL STORM DRAINAGE PIPING SHALL BE INSULATED TO PREVENT CONDENSATION. INSULATION NOT SHOWN FOR CLARITY. SEE PLUMBING NOTES FOR INSULATION REQUIREMENTS.=

KEYED NOTES

- P1 PROVIDE PROSET TRAP GUARD® OR TRAP PRIMER FOR FLOOR DRAIN OR FLOOR SINK.
- P2 TOP OF CONCRETE SLAB IS 0'-6" A.F.F.
- P3 VENT FROM GREASE INTERCEPTOR. SEE SITE PLAN FOR CONTINUATION. COORDINATE PIPE ROUTING WITH LOCATION OF GREASE INTERCEPTOR.
- P4 GREASE INTERCEPTOR LOCATION SHOWN FOR REFERENCE ONLY. COORDINATE GREASE INTERCEPTOR LOCATION WITH CIVIL ENGINEER AND SITE CONTRACTOR.
- P5 4"x5" VENT THROUGH ROOF
- P6 SANITARY LINE TO SANITARY SEWER. SEE SITE PLAN FOR CONTINUATION.
- P7 GREASE LINE TO EXTERIOR GREASE INTERCEPTOR. SEE SITE PLAN FOR CONTINUATION
- P8 TERMINATE BOTTOM OF PRIMARY STORM DRAIN A MINIMUM OF 12" ABOVE GRADE WITH DOWNSPOUT COVER.
- P9 TERMINATE OVERFLOW DRAIN AS HIGH AS POSSIBLE WITH DOWNSPOUT COVER.
- 4 5 P10 REFERENCE MANUFACTURER INSTALLATION GUIDE FOR LAYOUT GUIDELINES PRIOR TO INSTALL AND POURING THE SLAB
- P11 TERMINATE BOTTOM OF OVERFLOW DRAIN A MINIMUM OF 12" ABOVE GRADE WITH DOWNSPOUT COVER.
- P12 ROUTE CONDENSATE TO ROOF DRAIN AS SHOWN

WASTE PIPE SIZING - UPC

Fixture Type	TRAP SIZE	DFU	QUANTITY	TOTAL
URINAL	2 IN.	2	1	2
WATER CLOSET	3 IN.	4	3	12
LAVATORY SINK	1 1/4 IN.	1	2	2
WASH SINK (HAND SINK)	1 1/2 IN.	2	4	8
FLOOR DRAIN OR SINK	3 IN.	6	5	30
FLOOR DRAIN OR SINK	4 IN.	8	1	8
FLOOR DRAIN EMERGENCY	3 IN.	0	0	0
			TOTAL	62

GREASE PIPE SIZING - UPC

MOP SINK	3 IN.	3	2	6
4 FLOOR DRAIN OR SINK	3 IN.	6	10	60
~~TRENCH DRAIN~~	~~4 IN.~~	~~8~~	~~1~~	~~8~~
WASHING MACHINE	2 IN.	3	1	3
			4 TOTAL	77

STORM PIPE SIZING

RAINFALL = 4 IN./HR

VERTICAL LEADERS		
	ROOF AREA	SIZE
ROOF DRAIN	SQ. FT.	IN.
RD-1	1,345	3
RD-2	1,340	3
RD-3	1,145	3
RD-4	1,145	3
TOTAL	4,975	

HORIZONTAL PIPING (SLOPE ⅛" PER FOOT)		
	ROOF AREA	SIZE
ROOF DRAIN	SQ. FT.	IN.
RD-1	1,345	4
RD-2	1,340	4
RD-3	1,145	4
RD-4	1,145	4
RD-1 & RD-3	2,490	6
RD-2 & RD-4	2,485	6
RD-1, RD-2, RD-3 & RD-4	4,975	6

REV	DATE	DESCRIPTION	BY
4	12/03/20	SERVICE AREA OPTIMIZATION	WLW
3	11/13/20	USRD SAO SET REVIEW	WLW
2	05/05/20	CIVIL & PLAN REVIEW COMMENTS	WLW
1	01/23/20	PERMIT SET	WLW
	01/13/20	USRD PROGRESS SET REVIEW	WLW

PREPARED BY:
emanuelson-podas
consulting engineers
Emanuelson-Podas, Inc.
2705 Bush Lake Road
Edina, MN 55435
(952) 930-0050 | www.epinc.com
3801.0037
MICHAEL WEBERT LICENSED 17648 KANSAS PROFESSIONAL ENGINEER
12/03/20

PREPARED FOR:
McDonald's USA, LLC

© 2020 McDonald's USA, LLC
These drawings and specifications are the confidential and proprietary property of McDonald's USA, LLC and shall not be copied or reproduced without written authorization. The contract documents were prepared for use on this specific site in conjunction with its issue date and are not suitable for re-use on another project. Reproduction of these drawings for reference or example on another project requires the services of properly licensed architects and engineers. Reproduction of the contract documents for reuse on another project is not authorized.

DRAWN BY: WLW
STD ISSUE DATE: 2019_11
REVIEWED BY: WLW
DATE ISSUED: 01-23-20
R@19175

TITLE: 2019 STANDARD BUILDING – BB20
4597F10-WOOD/WOOD

DESCRIPTION: WOOD BEARING WALLS W/FIBER CEMENT SIDING & CI
WOOD ROOF TRUSS FRAMING
FIBER CEMENT PANEL/BATTEN/ALPOLIC PANEL/BRICK EXT. FINISH

SITE ID: 015-0071
SITE ADDRESS: 605 SOUTH 7TH STREET, KANSAS CITY, KS

SHEET NO. 015-0071.00.B
P1.2
WASTE, VENT & STORM PIPING

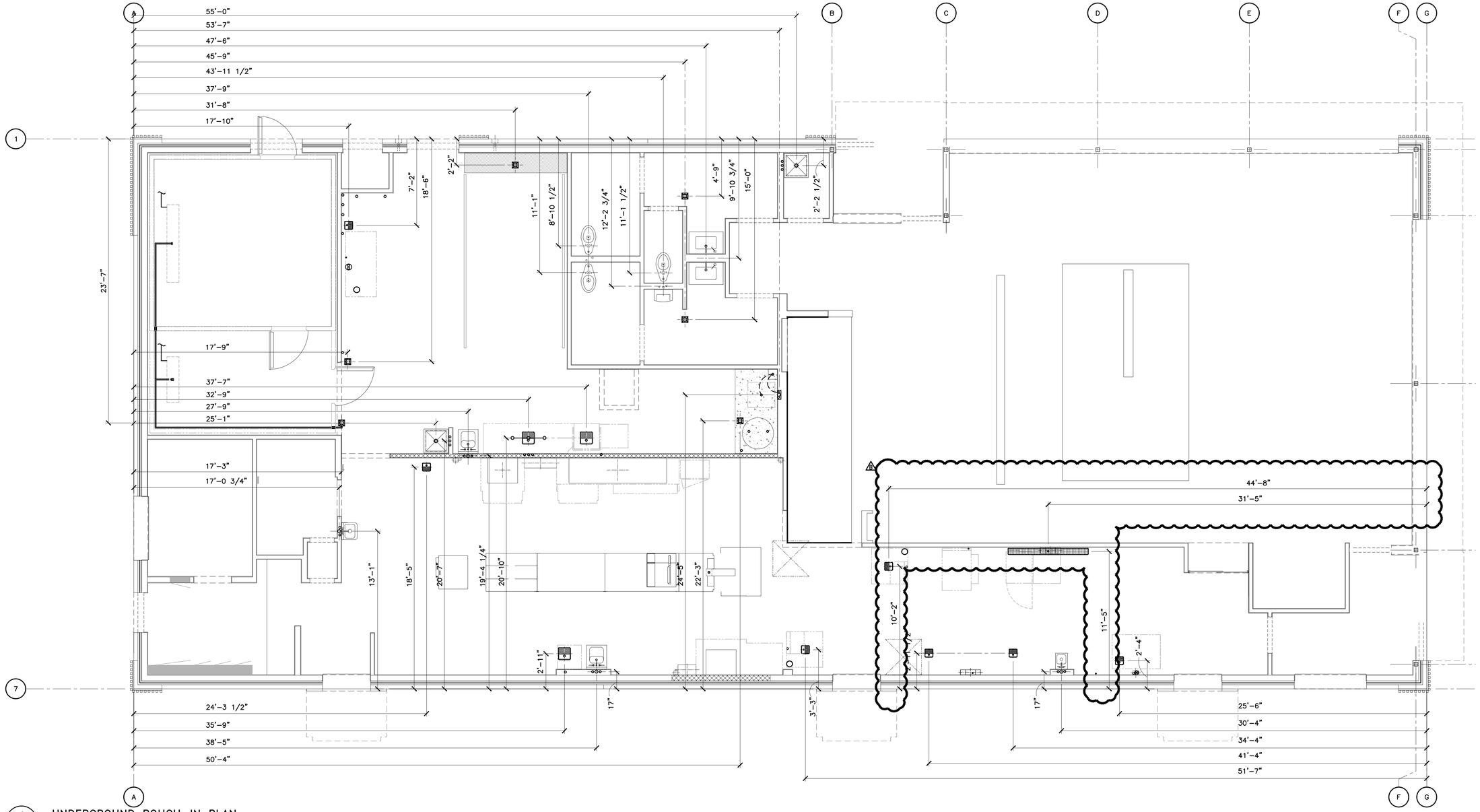

1 P1.4 UNDERGROUND ROUGH-IN PLAN
1/4"=1'-0"

DRAWING NOTES

1. THIS PLAN IS PROVIDED AS A GUIDE FOR THE PLUMBING CONTRACTOR. ALL DIMENSIONS ARE ROUNDED TO THE NEAREST ¼", AND ARE TAKEN FROM ARCHITECTURAL GRID LINES.

SEE SHEET P1.6 FOR OVERHEAD DIMENSIONS AND PLUMBING SCHEDULE.

REV	DATE	DESCRIPTION	BY
3	12/03/20	SERVICE AREA OPTIMIZATION	WLW
2	11/13/20	USRD SAO SET REVIEW	WLW
1	05/05/20	CIVIL & PLAN REVIEW COMMENTS	WLW
-	01/23/20	PERMIT SET	WLW
-	01/13/20	USRD PROGRESS SET REVIEW	WLW

emanuelson-podas
consulting engineers
Emanuelson-Podas, Inc.
7705 Bush Lake Road
Edina, MN 55439
(952) 930-0050 | www.epinc.com

3801.0037

MICHAEL WEBERT LICENSED 17648 KANSAS PROFESSIONAL ENGINEER

PREPARED BY: 12/03/20

PREPARED FOR: McDonald's USA, LLC

© 2020 McDonald's USA, LLC
These drawings and specifications are the confidential and proprietary property of McDonald's USA, LLC and shall not be copied or reproduced without written authorization. The contract documents were prepared for use on this specific site in conjunction with its Issue date and are not suitable for use on other projects or at a different site. Reproduction of these drawings for reference or example on another project requires the services of properly licensed architects and engineers. Reproduction of the contract documents for reuse on another project is not authorized.

DRAWN BY: MJW
STD ISSUE DATE: 2019_11
REVIEWED BY: WLW
DATE ISSUED: 01-23-20
RQ#19175

TITLE: 2019 STANDARD BUILDING – BB20
4597F10-WOOD/WOOD

DESCRIPTION: WOOD BEARING WALLS W/FIBER CEMENT SIDING & CI
WOOD ROOF TRUSS FRAMING
FIBER CEMENT PANEL/BATTEN/ALPOLIC PANEL/BRICK EXT. FINISH

SITE ID: 015-0071
SITE ADDRESS: 605 SOUTH 7TH STREET, KANSAS CITY, KS

SHEET NO.: 015-0071.00.B
P1.4
UNDERGROUND ROUGH-IN

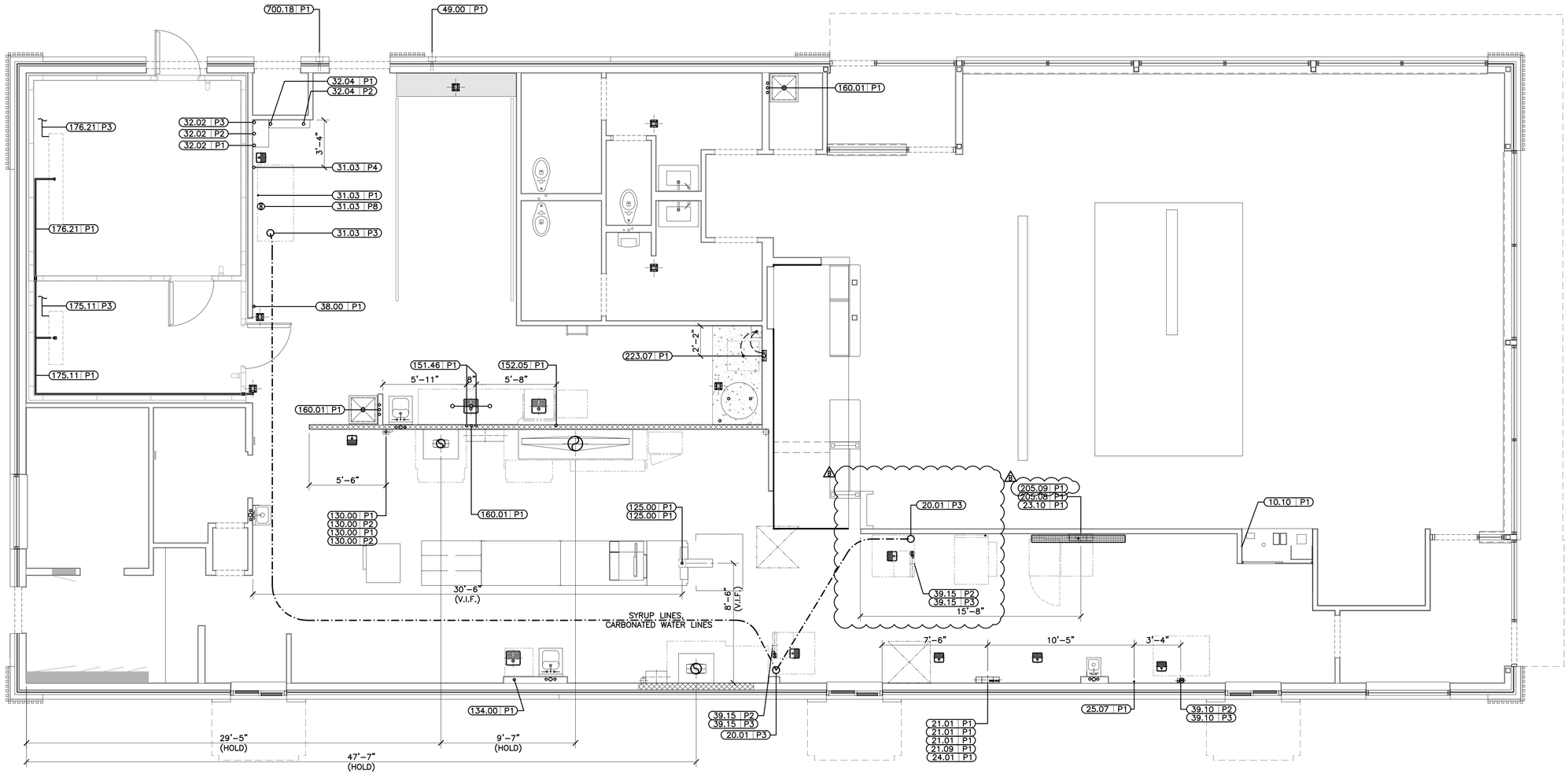

1 P1.6 OVERHEAD ROUGH-IN PLAN
1/4"=1'-0"

SEE SHEET P1.4 FOR UNDERGROUND ROUGH-IN PLAN

VIF = Verify in Field
PC = Plumbing Contractor
BSI = Beverage System Installer

PLUMBING SCHEDULE

TAG #	QTY	DESCRIPTION	GAS TYPE	GAS BTU	GAS SIZE	HW	CW	MISC PLBG	HGT AFF	DRAIN	REQUIREMENTS & REMARKS
010.10P1	1	CO2 DRIVEN KETCHUP DISPENSERS	–	–	–	–	–	3/8" CO2	SEE RMKS	–	DN CHASE FROM BULK CO2 – IF NO CHASE RUN IN 2"COND TO JB –BSI TO CONN CO2 LINE PER LOCAL CODES
020.01P3	2	AUTOMATED BEVERAGE SYSTEM 2.0	–	–	–	–	–	6" PVC CONDUIT	SEE RMKS	–	ABOVE CEILING FROM SODA SYSTEM – TERMINATE AT CHASE
021.01P1	3	COFFEE BREWER (GLASS DECANTERS)	–	–	–	–	1/4" TRTD	–	SEE RMKS	–	DN CHASE FROM SODA SYSTEM – IF NO CHASE RUN IN 2"COND TO JB –BSI TO CONN CW LINE PER LOCAL CODES. 1/4" R.O. WATER OPTIONAL
021.09P1	1	HOT WATER DISPENSER	–	–	–	–	1/4" TRTD	–	SEE RMKS	–	DN CHASE FROM SODA SYSTEM – IF NO CHASE RUN IN 2"COND TO JB –BSI TO CONN CW LINE PER LOCAL CODES. 1/4" R.O. WATER OPTIONAL
023.10P1	1	ESPRESSO BREWER	–	–	–	–	3/8" R.O.	–	SEE RMKS	–	DN CHASE FROM R.O. SYSTEM – IF NO CHASE RUN IN 2"COND TO JB –BSI TO CONN CW LINE PER LOCAL CODES
024.01P1	1	ORANGE JUICE DISPENSER	–	–	–	–	1/2" FLTR	–	SEE RMKS	–	DN CHASE FROM SODA TOWER CW LINE W/ RECIRC/CHIILED INSULATED BUNDLE–BSI CONN CWLINE,LOCAL CODES PERMITTING
025.07P1	1	INFUSION TEA BREWER – MIS	–	–	–	–	1/2" TRTD	3/8" CO2	SEE RMKS	–	DN CHASE FROM SODA SYSTEM – IF NO CHASE RUN IN 2"COND TO JB –BSI TO CONN CW LINE PER LOCAL CODES
028.15P3	1	NOT USED	–	–	–	–	–	SODA BUNDLE	SEE RMKS	3/4" IND	DN CHASE FROM SODA SYSTEM – BSI TO MAKE FINAL CONNECTIONS PER LOCAL CODES
031.03P1	1	SODA SYSTEM PACKAGE B.I.B.(RECIRCULATING– 3 TOWERS)	–	–	–	–	–	3/8" OUTLET	SEE RMKS	–	FLEX LINE OVERHEAD TO VARIOUS EQUIP. BSI TO MAKE FINAL CONN PER LOCAL CODES
031.03P3	1	SODA SYSTEM PACKAGE B.I.B.(RECIRCULATING– 3 TOWERS)	–	–	–	–	–	SODA BUNDLE	SEE RMKS	–	OVERHEAD TO SODA TOWER CHASE(S) – BSI TO MAKE FINAL CONNECTIONS PER LOCAL CODES
031.03P4	1	SODA SYSTEM PACKAGE B.I.B.(RECIRCULATING– 3 TOWERS)	–	–	–	–	3/4"	–	1'–6"	3/4" IND	BSI TO MAKE CONNECTION FROM BACKFLOW PREVENTER (VERIFY HEIGHT IN FIELD)
031.03P8	1	SODA SYSTEM PACKAGE B.I.B.(RECIRCULATING– 3 TOWERS)	–	–	–	–	–	REFRIG LINES	SEE RMKS	–	FROM REMOTE CONDENSING UNIT
032.02P1	1	REVERSE OSMOSIS WATER FILTRATION SYSTEM – TANKLESS	–	–	–	–	3/8" FLTR	–	SEE RMKS	–	FLEX LINE OVERHEAD FROM SODA SYSTEM –BSI TO MAKE FINAL CONN PER LOCAL CODES
032.02P2	1	REVERSE OSMOSIS WATER FILTRATION SYSTEM – TANKLESS	–	–	–	–	–	3/8" OUTLET	SEE RMKS	–	FLEX LINE OVERHEAD TO RAPID STEAMER, ESPRESSO, AND COFFEE (OPT.) –BSI TO MAKE FINAL CONN PER LOCAL CODES
032.02P3	1	REVERSE OSMOSIS WATER FILTRATION SYSTEM – TANKLESS	–	–	–	–	–	–	–	1/4" WASTE	–
032.04P1	1	WATER FILTRATION SYSTEM	–	–	–	–	–	3/4" INLET	6'–0"	–	–
032.04P2	1	WATER FILTRATION SYSTEM	–	–	–	–	–	3/4" OUTLET	–	–	3/4" GHT RINSE CONN. FLEX LINE OVHD. TO RAPID STEAMER, ESPRESSO, & COFFEE (OPT.) –BSI TO MAKE FINAL CONN PER LOCAL CODE
038.00P1	1	CLEAN IN PLACE PANEL	–	–	–	–	1/2" FLTR	–	6'–0"	–	FOR CLEANING BULK COKE TANKS. INSTALL HEIGHT TO BOTTOM OF UNIT

VIF = Verify in Field
PC = Plumbing Contractor
BSI = Beverage System Installer

PLUMBING SCHEDULE

TAG #	QTY	DESCRIPTION	GAS TYPE	GAS BTU	GAS SIZE	HW	CW	MISC PLBG	HGT AFF	DRAIN	REQUIREMENTS & REMARKS
039.10P2	1	ICE MACHINE – 1400 LB.	–	–	–	–	1/2" TRTD	–	SEE RMKS	3/4" IND	WATER LINE OVERHEAD FROM SODA SYSTEM – BSI TO MAKE FINAL CONNECTIONS PER LOCAL CODES
039.10P3	1	ICE MACHINE – 1400 LB.	–	–	–	–	–	REFRIG LINES	–	–	REFRIGERATION LINES OVERHEAD FROM REMOTE CONDENSING UNIT
039.15P2	2	ICE MACHINE – 1000 LB.	–	–	–	–	1/2" TRTD	–	SEE RMKS	3/4" IND	WATER LINE OVERHEAD FROM SODA SYSTEM – BSI TO MAKE FINAL CONNECTIONS PER LOCAL CODES
039.15P3	2	ICE MACHINE – 1000 LB.	–	–	–	–	–	REFRIG LINES	–	–	REFRIGERATION LINES OVERHEAD FROM REMOTE CONDENSING UNIT
049.00P1	1	CO2 FILL BOX	–	–	–	–	–	–	3'–4"	–	HEIGHT IS TO BOTTOM OF FILL BOX;SUPPLIED BY MANUFACTURER;INSTALLED BY G.C. SEE BUILDING ELEVATIONS.
125.00P1	2	RAPID BUN STEAMER	–	–	–	–	3/8" R.O.	–	SEE RMKS	–	BSI EXTENDS CW LINE FROM R.O. SYSTEM & TERM. W/QUICK DISCONN.
130.00P1	2	COMBI OVEN	–	–	–	–	1/2" FLTR		SEE RMKS	1 1/2" IND	BSI EXTENDS CW LINE OVERHEAD FROM SODA SYSTEM & TERM. W/QUICK DISCONN. AND SHUTOFF
130.00P2	2	COMBI OVEN	–	–	–	–	3/8" R.O.		SEE RMKS	–	BSI EXTENDS CW LINE OVERHEAD FROM R.O. SYSTEM & TERM. W/QUICK DISCONN. AND SHUTOFF
134.00P1	1	VEGETABLE SINK	–	–	–	–	3/4"	–	1'–10"	1–1/2" IND	–
151.46P1	1	SOILED DISHTABLE – RIGHT HAND – 90.5" WIDE	–	–	–	3/4" 140	3/4"	–	1'–6"	–	PC MAKES FINAL CONNECTIONS PER LOCAL CODE
152.05P1	1	WAREWASHER (WITH VAPOR VENT) – UPRIGHT	–	–	–	1/2" 140	1/2"	–	SEE RMKS	2" INDIRECT	PC TO PROVIDE HW, CW, INDIRECT DRAIN PIPING AND MAKE ALL FINAL CONNECTIONS. HW @ 5'–2" AFF, CW @ 4'–10" AFF, DRAIN @ 9"
160.01P1	3	CHEMICAL SYSTEM	–	–	–	3/4" 110	–	–	SEE RMKS	–	PC TO PROVIDE 3/4" MHT. FINAL CONNECTIONS BY EQUIPMENT INSTALLER PER LOCAL CODE, SEE SHEET P3.0 FOR INSTALLATION HEIGHT
175.11P1	1	COOLER EVAPORATOR	–	–	–	–	–	–	–	3/4" COND.	PC TO ROUTE CONDENSATE DRAIN LINE TO FLOOR DRAIN. PC TO LIQUID–TIGHT SEAL OPENING FOR LINE EXITING BOX
175.11P3	1	COOLER EVAPORATOR	–	–	–	–	–	REFRIG LINES	–	–	RUN TO REMOTE CONDENSING UNIT–INSULATE FULL RUN LENGTH–INSTALLED BY REFRIG. CONTRACTOR
176.21P1	1	FREEZER EVAPORATOR	–	–	–	–	–	–	–	3/4" COND.	PC TO ROUTE CONDENSATE DRAIN LINE TO FLOOR DRAIN. PC TO LIQUID–TIGHT SEAL OPENING FOR LINE EXITING BOX. HEAT TAPE BY REF.
176.21P3	1	FREEZER EVAPORATOR	–	–	–	–	–	REFRIG LINES	–	–	RUN TO REMOTE CONDENSING UNIT–INSULATE FULL RUN LENGTH–INSTALLED BY REFRIG. CONTRACTOR
205.08P1	1	BIC MACHINE	–	–	–	–	1/2" FLTR	–	SEE RMKS	1" IND	DN CHASE. IF NO CHASE RUN IN 2"COND TO JB –BSI TO CONNECT LINES PER LOCAL CODES
205.09P1	1	FROZEN BEVERAGE DISPENSER	–	–	–	–	1/2" FLTR	3/8" CO2	SEE RMKS	–	DN CHASE. IF NO CHASE RUN IN 2"COND TO JB –BSI TO CONNECT LINES PER LOCAL CODES
223.07P1	1	WASHER	–	–	–	3/4" 140	3/4"	–	4'–0"	1 1/2" D	SEE PLUMBING DWGS FOR WALL BOX. INSTALL HEIGHT IS TO BOTTOM OF THE BOX
700.18P1	1	BULK OIL FILL BOX	–	–	–	–	–	–	3'–4"	–	HEIGHT IS TO BOTTOM OF FILL BOX;SUPPLIED BY MANUFACTURER;INSTALLED BY G.C. SEE BUILDING ELEVATIONS.

REV	DATE	DESCRIPTION	BY
.	.	.	.
.	.	.	.
2	12/03/20	SERVICE AREA OPTIMIZATION	WLW
.	11/13/20	USRD SMO SET REVIEW	WLW
1	05/05/20	CIVIL & PLAN REVIEW COMMENTS	WLW
.	01/23/20	PERMIT SET	WLW
.	01/13/20	USRD PROGRESS SET REVIEW	WLW

emanuelson-podas
consulting engineers
Emanuelson-Podas, Inc.
7705 Bush Lake Road
Edina, MN 55439
(952) 930-0050 | www.epinc.com

3801.0037

MICHAEL WEBERT LICENSED 17648 KANSAS PROFESSIONAL ENGINEER

12/03/20

PREPARED BY:

PREPARED FOR: McDonald's USA, LLC

©2020 McDonald's USA, LLC
These drawings and specifications are the confidential and proprietary property of McDonald's USA, LLC. and shall not be copied or reproduced without written authorization. The contract documents were prepared for use on this specific site in conjunction with its issue date and revision date shown on the title block. Modifications to these drawings or these drawings for reference or example on another project requires the services of properly licensed architects and engineers. Reproduction of the contract documents for use on another project is not authorized.

DRAWN BY	REVIEWED BY	DATE ISSUED
M.J.W. STD ISSUE DATE 2019_11	WLW	01–23–20

TITLE: 2019 STANDARD BUILDING – BB20 4597F10–WOOD/WOOD

DESCRIPTION: WOOD BEARING WALLS W/FIBER CEMENT SIDING & CI WOOD ROOF TRUSS FRAMING FIBER CEMENT PANEL/BATTEN/ALPOLIC PANEL/BRICK EXT. FINISH

SITE ID: 015–0071

SITE ADDRESS: 605 SOUTH 7TH STREET, KANSAS CITY, KS

RQ#19175

SHEET NO.: 015–0071.00.B

P1.6

OVERHEAD ROUGH–IN

1 / P2.0 DOMESTIC WATER PIPING ISOMETRIC
NO SCALE

REV	DATE	DESCRIPTION	BY
-	01/23/20	PERMIT SET	WLW
-	01/13/20	USRD PROGRESS SET REVIEW	WLW

emanuelson-podas
consulting engineers
Emanuelson-Podas, Inc.
7705 Bush Lake Road
Edina, MN 55439
(952) 930-0050 | www.epinc.com

3801.0037

MICHAEL WEBERT LICENSED 17648 KANSAS PROFESSIONAL ENGINEER

PREPARED BY: 01/23/20

PREPARED FOR:
McDonald's USA, LLC

©2020 McDonald's USA, LLC

These drawings and specifications are the confidential and proprietary property of McDonald's USA, LLC and shall not be copied or reproduced without written authorization. The contract documents were prepared for use on this specific site in conjunction with its issue date and are not suitable for use at other locations or at other times. The use of these drawings for reference or example on another project requires the services of properly licensed architects and engineers. Reproduction of the contract documents for reuse on another project is not authorized.

DRAWN BY: MJW
STD ISSUE DATE: 2019_11
REVIEWED BY: WLW
DATE ISSUED: 01-23-20
RO#19175

TITLE: 2019 STANDARD BUILDING – BB20 4597F10–WOOD/WOOD

DESCRIPTION
WOOD BEARING WALLS W/FIBER CEMENT SIDING & CI
WOOD ROOF TRUSS FRAMING
FIBER CEMENT PANEL/BATTEN/ALPOLIC PANEL/BRICK EXT. FINISH

SITE ID: 015–0071
SITE ADDRESS: 605 SOUTH 7TH STREET, KANSAS CITY, KS

SHEET NO.
015–0071.00.0
P2.0
DOMESTIC WATER ISOMETRIC

1 / P2.1 WASTE & VENT PIPING ISOMETRIC
NO SCALE

REV	DATE	DESCRIPTION	BY
-	-	-	-
-	-	-	-
2	12/03/20	SERVICE AREA OPTIMIZATION	WLW
-	11/13/20	USRD SAD SET REVIEW	WLW
1	05/05/20	CIVIL & PLAN REVIEW COMMENTS	WLW
-	01/23/20	PERMIT SET	WLW
-	01/13/20	USRD PROGRESS SET REVIEW	WLW

emanuelson-podas
consulting engineers
Emanuelson-Podas, Inc.
7705 Bush Lake Road
Edina, MN 55439
(952) 930-0050 | www.epinc.com

3801.0037

MICHAEL WEBER LICENSED 17648 KANSAS PROFESSIONAL ENGINEER

PREPARED BY: 12/03/20

PREPARED FOR: McDonald's USA, LLC

©2020 McDonald's USA, LLC
These drawings and specifications are the confidential and proprietary property of McDonald's USA, LLC and shall not be copied or reproduced without written authorization. The contract documents were prepared for use on this specific site in conjunction with its issue date and are not suitable for use on other sites or at other dates. The use of these drawings for reference or example on another project requires the services of properly licensed architects and engineers. Reproduction of the contract documents for reuse on another project is not authorized.

DRAWN BY: MJW
STD ISSUE DATE: 2019_11
REVIEWED BY: WLW
DATE ISSUED: 01-23-20
R0#19175

TITLE: 2019 STANDARD BUILDING – BB20
4597F10–WOOD/WOOD

DESCRIPTION
WOOD BEARING WALLS W/FIBER CEMENT SIDING & CI
WOOD ROOF TRUSS FRAMING
FIBER CEMENT PANEL/BATTEN/ALPOLIC PANEL/BRICK EXT. FINISH

SITE ID: 015-0071
SITE ADDRESS: 605 SOUTH 7TH STREET, KANSAS CITY, KS

SHEET NO. 015-0071.00.B
P2.1
WASTE & VENT ISOMETRIC

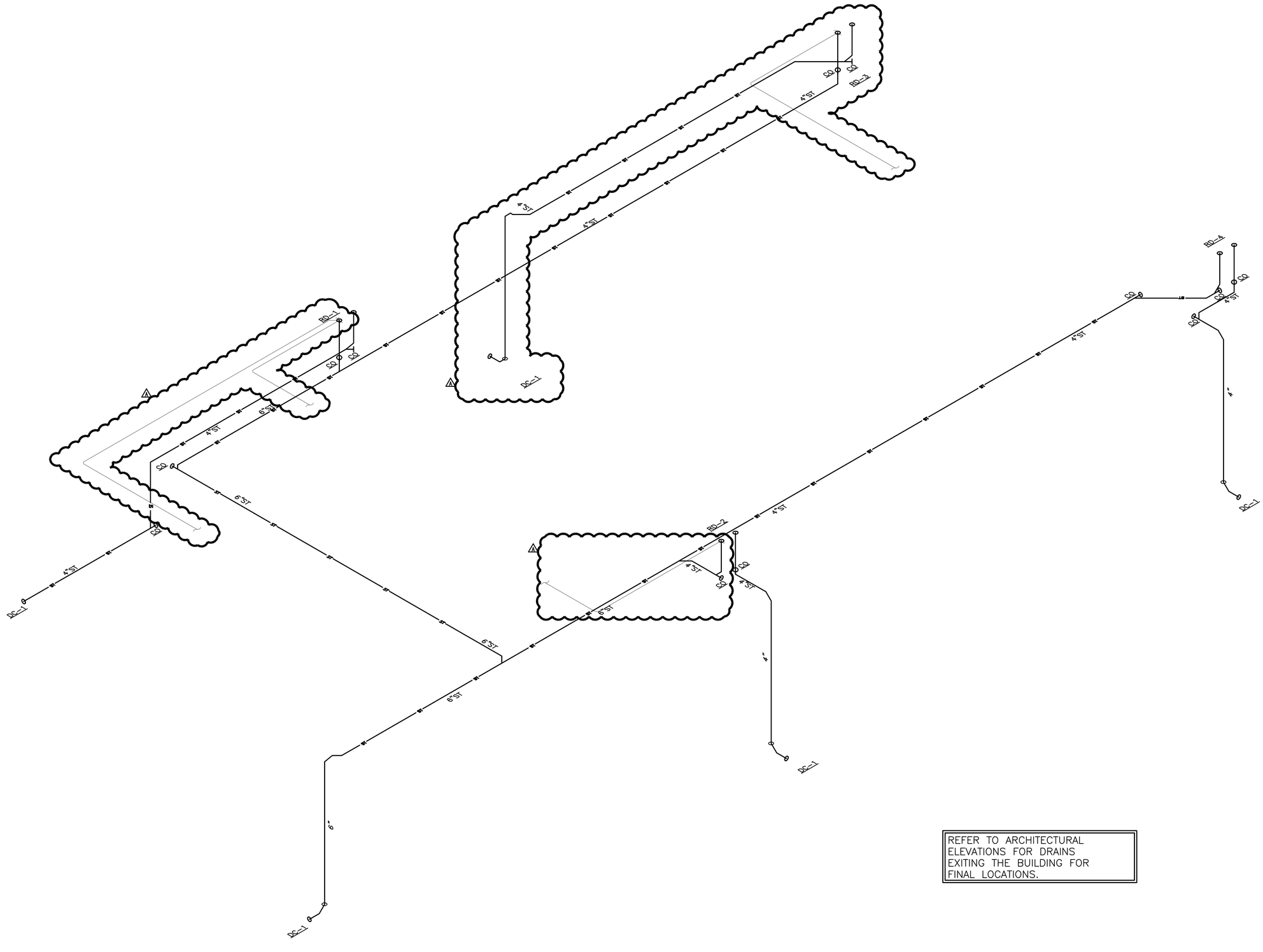

REFER TO ARCHITECTURAL ELEVATIONS FOR DRAINS EXITING THE BUILDING FOR FINAL LOCATIONS.

1 / P2.2 STORM PIPING ISOMETRIC
NO SCALE

REV	DATE	DESCRIPTION	BY
1	05/05/20	CIVIL & PLAN REVIEW COMMENTS	WLW
-	01/23/20	PERMIT SET	WLW
-	01/13/20	USRD PROGRESS SET REVIEW	WLW

emanuelson-podas
consulting engineers
Emanuelson-Podas, Inc.
7705 Bush Lake Road
Edina, MN 55439
(952) 930-0050 | www.epinc.com

3801.0037

MICHAEL WEBERT LICENSED 17648 KANSAS PROFESSIONAL ENGINEER

PREPARED BY: 05/05/20

PREPARED FOR: McDonald's USA, LLC

©2020 McDonald's USA, LLC
These drawings and specifications are the confidential and proprietary property of McDonald's USA, LLC and shall not be copied or reproduced without written authorization. The contract documents were prepared for use on this specific site in conjunction with its issue date and are not suitable for use on other sites or at other times. Any use of these drawings for reference or example on another project requires the services of properly licensed architects and engineers. Reproduction of the contract documents for reuse on another project is not authorized.

DRAWN BY: MJW
STD ISSUE DATE: 2019_11
REVIEWED BY: WLW
DATE ISSUED: 01-23-20
RD#19175

TITLE: 2019 STANDARD BUILDING – BB20 4597F10-WOOD/WOOD

DESCRIPTION: WOOD BEARING WALLS W/FIBER CEMENT SIDING & CI WOOD ROOF TRUSS FRAMING FIBER CEMENT PANEL/BATTEN/ALPOLIC PANEL/BRICK EXT. FINISH

SITE ID: 015-0071
SITE ADDRESS: 605 SOUTH 7TH STREET, KANSAS CITY, KS

SHEET NO.: 015-0071.00.A
P2.2
STORM ISOMETRIC

KEYED NOTES:
1. 24"ø MANWAY ACCESS COVER CONSTRUCTED OF ROUND CAST IRON OR SIMILAR RATED FOR HEAVY ROAD TRAFFIC WITH SUFFICIENT WEIGHT TO PREVENT UNAUTHORIZED ACCESS, OR BOLT OR LOCKING MECHANISM.
2. 4" CLEAN OUT
3. MANWAY EXTENSION TO FINISHED GRADE
4. CONCRETE SLAB FOR TRAFFIC LOADING
5. 3"ø VENT BACK TO BUILDING
6. 4"ø INLET
7. 4"ø OUTLET
8. 3"ø VENT CONNECTION
9. HOLD DOWN BRACKET
10. ANTI–BUOYANCY PAD FOR HIGH WATER TABLE INSTALLATIONS

*SEE GREEN TURTLE PROCEPTOR INSTALLATION INSTRUCTIONS FOR ADDITIONAL INFORMATION.

LOADING DESIGN: 12' 0" UNSATURATED SOIL / AASHTO STANDARD HS20–44 LOAD RATING

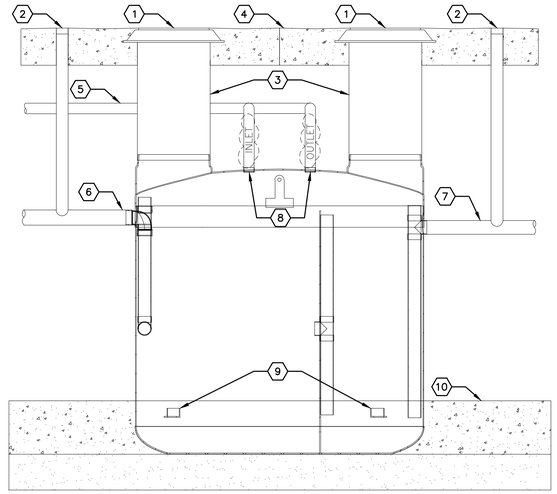

ELEVATION VIEW

DETAIL 1 / P3.0
GREASE INTERCEPTOR INSTALLATION
SCALE: NONE

KEYED NOTES:
1. ACCESS PANEL FOR THERMOSTATIC MIXING VALVE (SEE CHEMICAL SYSTEM INSTALLATION DETAIL)
2. ECOLAB CHEMICAL SYSTEM (SEE CHEMICAL SYSTEM INSTALLATION DETAIL)
3. 24"Wx36"H WALL GUARD (QTY. 2) FURNISHED WITH MOP SINK (SEE PLUMBING FIXTURE SCHEDULE)
4. MOP SINK FAUCET WITH INTEGRAL VACUUM BREAKER (SEE PLUMBING FIXTURE SCHEDULE)
5. HOSE FURNISHED WITH MOP SINK FAUCET (SEE PLUMBING FIXTURE SCHEDULE)
6. HOSE BRACKET FURNISHED WITH MOP FAUCET (SEE PLUMBING FIXTURE SCHEDULE)
7. FLOOR GRATE

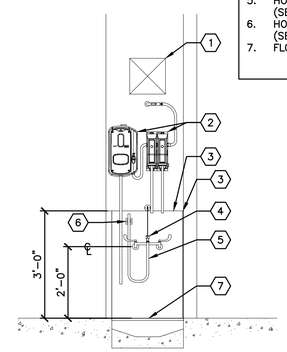

DETAIL 2 / P3.0
RECESSED MOP SINK
SCALE: ½"=1'–0"

KEYED NOTES:
1. FAUCET (SEE PLUMBING FIXTURE SCHEDULE)
2. LAVATORY OR HAND SINK (SEE PLUMBING FIXTURE SCHEDULE)
3. CORIAN COUNTERTOP – TOILET ROOMS ONLY (FURNISHED BY G.C.)
4. LAVATORY CARRIER – TOILET ROOMS ONLY (SEE ARCHITECTURAL DRAWINGS)
5. OUTLINE OF ADA COMPLIANT WRAP (SEE PLUMBING FIXTURE SCHEDULE)
6. THERMOSTATIC MIXING VALVE (SEE VALVE SCHEDULE)

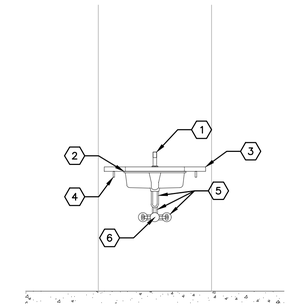

DETAIL 3 / P3.0
LAVATORY (OR HAND SINK)
SCALE: ½"=1'–0"

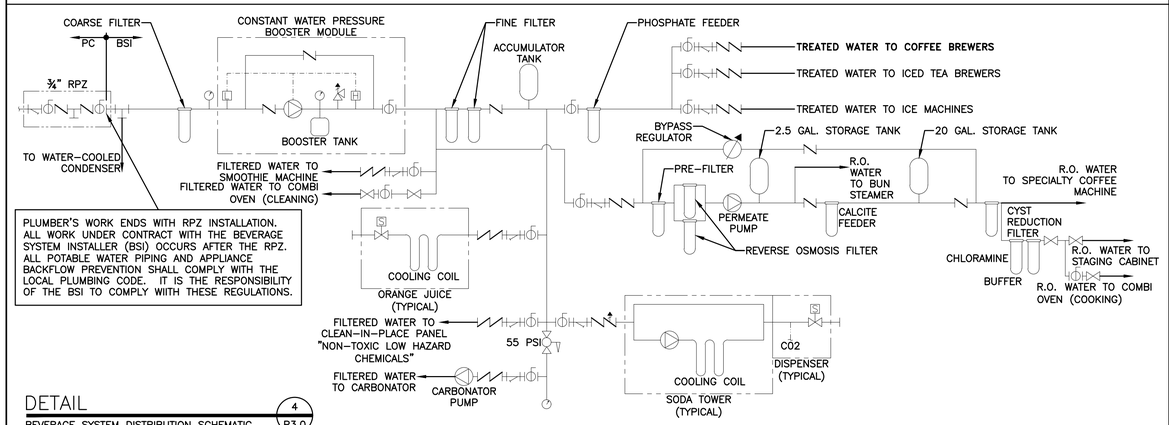

PLUMBER'S WORK ENDS WITH RPZ INSTALLATION. ALL WORK UNDER CONTRACT WITH THE BEVERAGE SYSTEM INSTALLER (BSI) OCCURS AFTER THE RPZ. ALL POTABLE WATER PIPING AND APPLIANCE BACKFLOW PREVENTION SHALL COMPLY WITH THE LOCAL PLUMBING CODE. IT IS THE RESPONSIBILITY OF THE BSI TO COMPLY WITH THESE REGULATIONS.

DETAIL 4 / P3.0
BEVERAGE SYSTEM DISTRIBUTION SCHEMATIC
SCALE: NONE

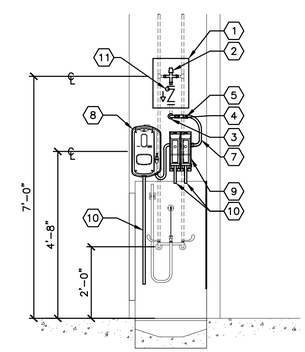

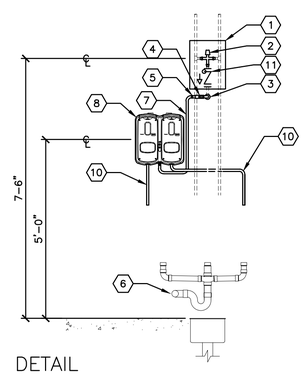

KEYED NOTES:
1. 12"x12" ACCESS PANEL (COORDINATE INSTALLATION WITH G.C.)
2. THERMOSTATIC MIXING VALVE SET TO 110°F (SEE VALVE SCHEDULE)
3. PIPE THROUGH WALL WITH ESCUTCHEON PLATE
4. SHUT–OFF VALVE
5. ¾" MHT CONNECTION
6. 2" SANITARY DRAIN PIPE THROUGH WALL FOR DIRECT CONNECTION.

PLUMBER'S WORK ENDS AT MHT CONNECTION

7. HOSE TO CHEMICAL SYSTEM
8. ECOLAB SOLIDSENSE CHEMICAL DISPENSER
9. ECOLAB SMARTSHAPE CHEMICAL DISPENSER
10. CHEMICAL DISPENSING HOSE
11. 140° WATER SUPPLY WITH ASSE 1055 RATED BACK FLOW PREVENTOR.

DETAIL
CHEMICAL SYSTEM INSTALLATION
SCALE: ½"=1'–0"

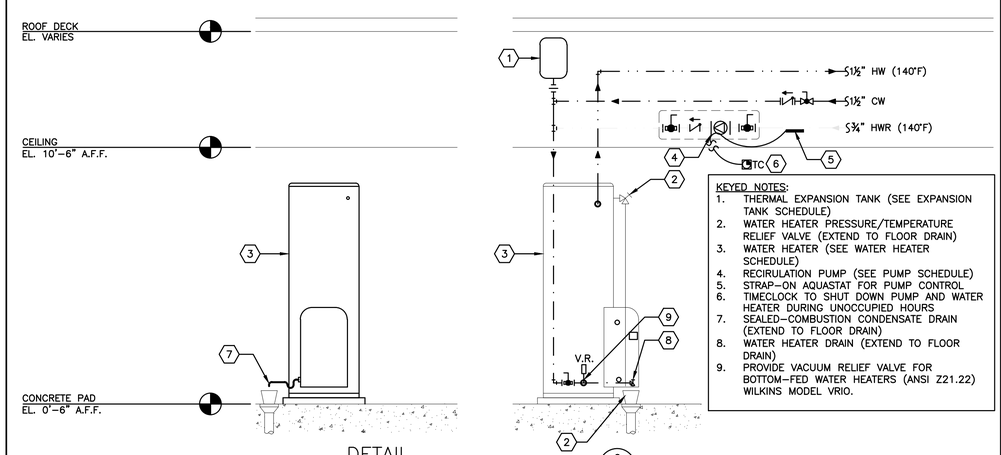

KEYED NOTES:
1. THERMAL EXPANSION TANK (SEE EXPANSION TANK SCHEDULE)
2. WATER HEATER PRESSURE/TEMPERATURE RELIEF VALVE (EXTEND TO FLOOR DRAIN)
3. WATER HEATER (SEE WATER HEATER SCHEDULE)
4. RECIRULATION PUMP (SEE PUMP SCHEDULE)
5. STRAP–ON AQUASTAT FOR PUMP CONTROL
6. TIMECLOCK TO SHUT DOWN PUMP AND WATER HEATER DURING UNOCCUPIED HOURS
7. SEALED–COMBUSTION CONDENSATE DRAIN (EXTEND TO FLOOR DRAIN)
8. WATER HEATER DRAIN (EXTEND TO FLOOR DRAIN)
9. PROVIDE VACUUM RELIEF VALVE FOR BOTTOM–FED WATER HEATERS (ANSI Z21.22) WILKINS MODEL VRIO.

DETAIL 6 / P3.0
ELECTRIC WATER HEATER PIPING
SCALE: NONE

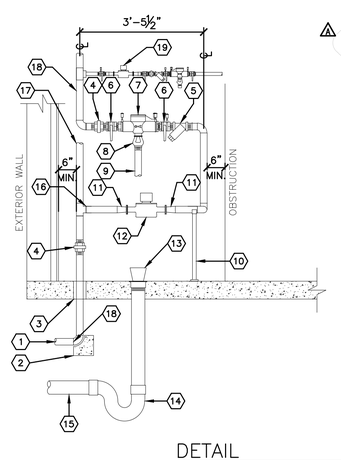

KEYED NOTES:
1. INCOMING UNDERGROUND WATER SERVICE SIZED PER FIRE PROTECTION CONTRACTOR'S HYDRAULIC CALCULATIONS
2. BLOCKING AT CHANGES IN DIRECTION
3. MINIMUM ½" ANNULAR CLEARANCE
4. UNION
5. BRONZE STRAINER
6. QUARTER–TURN BALL VALVE
7. REDUCED PRESSURE ZONE (RPZ) ASSEMBLY* REFER TO SHEET P4.2
8. AIR GAP FOR RELIEF VALVE
9. PIPING FROM AIR GAP TO FLOOR DRAIN
10. GALVANIZED STEEL PIPE SUPPORTS AS REQUIRED
11. 2"x1½" BUSHING
12. 1½" WATER METER**
13. FLOOR DRAIN–PITCH FLOOR TOWARDS DRAIN
14. P–TRAP
15. PIPE TO SEWER–PITCH AND VENT PER CODE
16. 2" PIPE FOR WATER SERVICE
17. PIPE FOR FIRE SPRINKLER SYSTEM SIZED PER FIRE PROTECTION CONTRACTOR'S HYDRAULIC CALCULATIONS
18. WATER PIPING FROM 5 FT. FROM BUILDING TO CEILING PENETRATION SHALL BE COPPER.
19. 1" IRRIGATION SYSTEM, 1" SEWER DEDUCT METER AND RPZ BACKFLOW ASSEMBLY.

*RPZ BASED ON WATTS MODEL 009QT–S
**WATER METER BASED ON NEPTUNE MODEL T–10

DETAIL 7 / P3.0
INCOMING WATER SERVICE WITH RPZ, METER AND FIRE SPRINKLER
SCALE: ½"=1'–0"

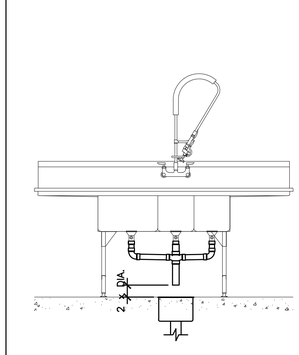

DETAIL 8 / P3.0
INDIRECT DRAINAGE PIPING (TYP.)
SCALE: ½"=1'–0"

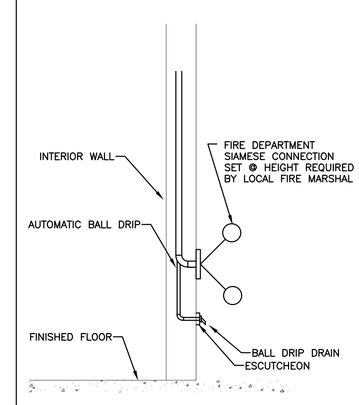

DETAIL 9 / P3.0
FIRE DEPARTMENT CONNECTION
WHEN REQUIRED BY FIRE MARSHAL

REV	DATE	DESCRIPTION	BY
-	-	-	-
-	-	-	-
4	12/03/20	SERVICE AREA OPTIMIZATION	WLW
3	11/13/20	USRD SAO SET REVIEW	WLW
2	05/05/20	CIVIL & PLAN REVIEW COMMENTS	WLW
1	01/23/20	PERMIT SET	WLW
-	01/13/20	USRD PROGRESS SET REVIEW	WLW

emanuelson-podas
consulting engineers
Emanuelson-Podas, Inc.
7705 Bush Lake Road
Edina, MN 55439
(952) 930-0050 | www.epinc.com

3801.0037

MICHAEL WEBERT LICENSED 17648 KANSAS PROFESSIONAL ENGINEER

PREPARED BY: 12/03/20

PREPARED FOR: McDonald's USA, LLC

©2020 McDonald's USA, LLC
These drawings and specifications are the confidential and proprietary property of McDonald's USA, LLC and shall not be copied or reproduced without written authorization. The contract documents were prepared for use on this specific site in conjunction with its issue date and McDonald's USA, LLC standards in effect at that time. Modifications to these drawings for reference or example on another project requires the services of properly licensed architects and engineers. Reproduction of the contract documents for reuse on another project is not authorized.

DRAWN BY: MJW
STD ISSUE DATE: 2019_11
REVIEWED BY: WLW
DATE ISSUED: 01–23–20
RQ#19175

TITLE: 2019 STANDARD BUILDING – BB20 4597F10–WOOD/WOOD

DESCRIPTION
WOOD BEARING WALLS W/FIBER CEMENT SIDING & CI
WOOD ROOF TRUSS FRAMING
FIBER CEMENT PANEL/BATTEN/ALPOLIC PANEL/BRICK EXT. FINISH

SITE ID: 015–0071
SITE ADDRESS: 605 SOUTH 7TH STREET, KANSAS CITY, KS

SHEET NO.: 015–0071.00.B
P3.0
DETAILS

GENERAL PLUMBING NOTES

GENERAL:

1. ALL WORK PERFORMED SHALL BE IN ACCORDANCE WITH ALL LOCAL CODES AND ACCEPTABLE TO THE AUTHORITY HAVING JURISDICTION.
2. ALL PLUMBING WORK SHALL BE PERFORMED BY A LICENSED PLUMBER.
3. ALL DIMENSIONS, CLEARANCES AND TOLERANCES SHALL BE VERIFIED PRIOR TO INSTALLATION. ALL ROUGH-IN LOCATIONS SHALL BE COORDINATED WITH THE MANUFACTURER'S SUBMITTAL INFORMATION.
4. ALL DIMENSIONAL INFORMATION IS AS FOLLOWS (UNLESS NOTED OTHERWISE):
   A. UNDERGROUND PIPE IS TO FOUNDATION
   B. OVERHEAD PIPE IS TO FINISHED WALL
   C. ELEVATIONS ARE TO FINISHED FLOOR
5. ALL MATERIALS, FIXTURES AND EQUIPMENT USED SHALL BE IN ACCORDANCE WITH McDONALD'S SPECIFICATIONS. SPECIFICATIONS ARE CONTAINED WITHIN THESE DRAWINGS AND THE McDONALD'S PROJECT MANUAL. ANY CONTRACTOR IN NEED OF A COPY OF THE McDONALD'S PROJECT MANUAL SHALL CONTACT THE McDONALD'S AREA CONSTRUCTION MANAGER. ANY VARIANCE FROM THE McDONALD'S SPECIFICATIONS SHALL BE REVIEWED AND APPROVED BY THE ENGINEER-OF-RECORD.
6. SEE COORDINATION SCHEDULE FOR ADDITIONAL SCOPE OF WORK.
7. ALL EQUIPMENT SHALL BE INSTALLED IN ACCORDANCE WITH ITS LISTING AND/OR THE MANUFACTURER'S INSTALLATION INSTRUCTIONS.
8. WHERE POOR SOIL CONDITIONS EXIST OR WHERE SUBSTANTIAL SETTLEMENT OF EITHER THE PIPING, THE BUILDING OR ADJACENT WALKS, PLANTERS, ETC., MAY OCCUR, THE CONTRACTOR SHALL PROVIDE ADEQUATE UNDERSLAB STAINLESS STEEL PIPE HANGERS OR APPROVED OTHER SUPPORT.
9. ALL PIPE SLEEVES SHALL BE PROPERLY SEALED AND INSULATED TO PREVENT HEAT LOSS AND SEEPAGE.
10. ALL PIPE INSULATION SHALL BE PROTECTED FROM DAMAGE FROM PIPE HANGERS. PROTECTION SHALL BE LIGHT GAUGE GALVANIZED STEEL OR EQUAL.
11. ALL PENETRATIONS OF FIRE-RATED WALLS SHALL BE FIRESTOPPED WITH AN APPROVED AND LISTED FIRESTOPPING SYSTEM.

SANITARY AND VENT SYSTEMS:

1. THE BUILDING SANITARY PIPE SHALL BE LOCATED A MINIMUM OF 5 FT. FROM THE INCOMING WATER SERVICE. WHERE A 5 FT. SEPARATION IS NOT POSSIBLE, THE BOTTOM OF THE WATER SERVICE PIPE SHALL BE A MINIMUM OF 12 IN. ABOVE THE TOP OF THE HIGHEST POINT OF THE SANITARY PIPE.
2. ALL SANITARY AND VENT PIPE SHALL BE PVC TYPE DWV, ABS OR PROTECTO 401 LINED CAST-IRON WHERE REQUIRED BY CODE.
3. ALL HORIZONTAL SANITARY PIPE SHALL BE INSTALLED WITH A MINIMUM PITCH OF ¼" PER FOOT, OR IF THE (AHJ) ALLOWS AS FOLLOWS:

PIPE SIZE	MIN. SLOPE
2½" OR LESS	¼" PER FT.
3" TO 6"	⅛" PER FT.
8" OR LARGER	1/16" PER FT.

4. CLEANOUTS SHALL BE INSTALLED IN ALL HORIZONTAL DRAINAGE PIPE AND SHALL BE LOCATED NOT MORE THAN 100 FT. APART.
5. CLEANOUTS SHALL BE INSTALLED AT ALL CHANGES OF DIRECTION GREATER THAN 45 DEGREES. WHERE MORE THAN ONE CHANGE OF DIRECTION OCCURS IN A SINGLE PIPE RUN, ONLY ONE (1) CLEANOUT SHALL BE REQUIRED FOR EVERY 40 FEET OF DEVELOPED LENGTH.
6. CLEANOUTS SHALL BE INSTALLED ON PIPES PRIOR TO ANY SLAB PENETRATION.
7. WHERE PIPING IS LOCATED WITHIN WALL CAVITIES, ACCESS TO THE CLEANOUTS SHALL BE PROVIDED.
8. CLEANOUTS ON 6-IN. AND SMALLER PIPES SHALL BE PROVIDED WITH A CLEARANCE OF NOT LESS THAN 18 IN. CLEANOUTS ON 8-IN. AND LARGER PIPE SHALL BE PROVIDED WITH A CLEARANCE OF NOT LESS THAN 36 IN.
9. ALL SUSPENDED SANITARY AND VENT PIPE SHALL BE SUPPORTED AS FOLLOWS:

MATERIAL	MAX. HORIZ. SPACING	MAX. VERT. SPACING
ABS	4 FT.	10 FT.
PVC (TYPE DWV)	4 FT.	10 FT.
CAST-IRON (<10 FT. PIPE SECTIONS)	5 FT.	15 FT.
CAST-IRON (10 FT. PIPE SECTIONS)	10 FT.	15 FT.

10. ALL PLUMBING FIXTURES SHALL BE VENTED AND THE MAXIMUM DISTANCE FROM THE FIXTURE TRAP TO THE VENT SHALL BE AS FOLLOWS:

TRAP SIZE	SLOPE	DISTANCE
1¼"	¼" PER FT.	2'-6"
1½"	¼" PER FT.	3'-6"
2"	¼" PER FT.	5'-0"
3"	⅛" PER FT.	6'-0"
4" & LARGER	⅛" PER FT.	10'-0"

11. ALL PLUMBING VENTS THROUGH THE ROOF SHALL TERMINATE A MINIMUM OF 12 INCHES ABOVE THE ROOF AND SHALL BE LOCATED A MINIMUM OF 8 FT. FROM ANY PARAPET WALL. WHERE A VENT TERMINATES WITHIN 8 FT. OF A PARAPET WALL, THE VENT SHALL TERMINATE A MINIMUM OF 6 INCHES ABOVE THE PARAPET.
12. ALL PLUMBING VENTS SHALL TERMINATE A MINIMUM OF 10 FT. HORIZONTALLY FROM ANY OUTDOOR AIR INTAKE. WHERE A PLUMBING VENT IS LOCATED WITHIN 10 FT. OF AN INTAKE, THE VENT SHALL TERMINATE A MINIMUM OF 3 FT. ABOVE THE INTAKE.
13. ALL SIDE WALL VENT TERMINATIONS SHALL BE PROTECTED TO PREVENT BIRDS OR RODENTS FROM ENTERING OR BLOCKING THE VENT OPENING.
14. ALL FLOOR DRAINS THAT DO NOT SERVE EQUIPMENT SHALL BE PROTECTED AGAINST DRYING OUT EITHER THROUGH THE INSTALLATION OF A TRAP PRIMER, DEEP SEAL TRAP OR PROSET TRAP GUARD. TRAP GUARD NOT ALLOWED IN KITCHEN AREA
15. ALL APPLIANCES SHALL DRAIN TO AN APPROVED SANITARY WASTE RECEPTOR (FLOOR SINK OR FLOOR DRAIN WITH FUNNEL). INDIRECT DRAINAGE FROM AN APPLIANCE SHALL MAINTAIN AN AIR GAP BETWEEN THE PIPE OUTLET AND THE TOP OF THE RECEPTOR. THE MINIMUM DISTANCE BETWEEN THE PIPE OUTLET AND THE TOP OF THE RECEPTOR SHALL BE TWICE THE DIAMETER OF THE APPLIANCE DRAIN PIPE.
16. THE PVC PLASTIC PIPING TO BE INSTALLED MUST COMPLY WITH ONE OF THE FOLLOWING ASTM STANDARDS: D2665, OR F891. THE INSTALLATION MUST COMPLY WITH ASTM STANDARD D2321
17. ALL PLASTIC PIPE USED FOR DRAIN, WASTE, AND VENT SYSTEM (ABS, PVC). SHALL COMPLY WITH ASTM D2661 OR F268 (ABS) AND D2665, D2949 OR F891 (PVC). ABOVE GRADE HORIZONTAL RUNS OF PLASTIC WASTE AND VENT PIPE CANNOT EXCEED 35 FEET IN TOTAL LENGTH. AND ABOVE GRADE VERTICAL STACKS CONSTRUCTED OF PLASTIC PIPE MAY EXCEED 35 FEET IN TOTAL HEIGHT ONLY IF AN APPROVED EXPANSION JOINT IS USED. SOLVENT WELD JOINTS IN PVC AND CPVC PIPE MUST INCLUDE USE OF PRIMER WHICH IS OF CONTRASTING COLOR TO THE PIPE AND CEMENT.
18. CAST IRON PIPE USED FOR ABOVE GROUND WASTE SYSTEMS MUST MEET ANSI STANDARD A21.2, A21.6, A21.8, A40.5, OR ASTM STANDARD A-74.

GREASE INTERCEPTORS:

1. SEE SITE PLAN FOR THE SIZE AND LOCATION OF THE GREASE INTERCEPTOR.
2. THE GREASE INTERCEPTOR SHALL BE INSTALLED IN A LOCATION THAT IS ACCESSIBLE FOR PUMPING.
3. THE GREASE INTERCEPTOR SHALL BE CONSTRUCTED OF FIBERGLASS OR PRECAST CONCRETE. GREASE INTERCEPTOR CONSTRUCTION SHALL CONFORM TO ALL LOCAL CODES.
4. PRECAST CONCRETE INTERCEPTORS SHALL BE CAPABLE OF 3,000 PSI COMPRESSIVE STRENGTH AT 28 DAYS, SHALL BE REINFORCED WITH BAR OR WIRE MESH AND SHALL BE COATED WITH A MINIMUM OF TWO(2) LAYERS OF NOVOL AC EPOXY ON THE INTERIOR. EPOXY SHALL BE SHERWIN WILLIAMS NOVA PLATE UHS OR EQUAL.
5. THE GREASE INTERCEPTOR SHALL BE VENTED IN ACCORDANCE WITH THE LOCAL CODE OR THE MANUFACTURER'S REQUIREMENTS.
6. ACCESS TO THE GREASE INTERCEPTOR SHALL BE PROVIDED WITH TWO (2) 24-IN. MANHOLES. ALL SURFACE WATER MUST DRAIN AWAY FROM MANHOLES.
7. PIPING INLET AND OUTLET SIDES SHALL BE CLEARLY LABELED ON THE TOP OF THE GREASE INTERCEPTOR TO INSURE PROPER INSTALLATION.

DOMESTIC SUPPLY SYSTEMS:

1. THE INCOMING WATER SERVICE PIPE SHALL BE LOCATED A MINIMUM OF 5 FT. FROM THE EXITING SANITARY PIPE. WHERE A 5 FT. SEPARATION IS NOT POSSIBLE, THE BOTTOM OF THE WATER SERVICE PIPE SHALL BE A MINIMUM OF 12 IN. ABOVE THE TOP OF THE HIGHEST POINT OF THE SANITARY PIPE.
2. ALL UNDERGROUND SITE PLUMBING SHALL CONFORM TO NSF 61, SHALL BE TYPE K COPPER TUBING OR COPPER PIPE, POLYETHYLENE (PE) OR CPVC. IF CPVC IS USED, FOAM INSULATION SHALL BE INSTALLED AT ALL CHANGES OF DIRECTION TO ACCOUNT FOR EXPANSION AND CONTRACTION. CPVC PIPE SHALL NOT BE USED PRIOR TO THE WATER METER. ALL COPPER PIPING MUST COMPLY WITH ASTM STANDARD B88. GALVANIZED STEEL PIPE SHALL MEET ASTM STANDARD A53.
3. INCOMING WATER SERVICE PRESSURE SHOULD BE BETWEEN 45 AND 55 PSI STATIC. WHERE WATER PRESSURE SERVICE EXCEEDS 80 PSI STATIC, AN APPROVED WATER-PRESSURE REDUCING VALVE WITH STRAINER CONFORMING TO ASSE 1003 SHALL BE INSTALLED. WHERE INCOMING WATER PRESSURE IS BELOW 45 PSI STATIC, A PRESSURE BOOSTER SYSTEM SHALL BE INSTALLED.
4. IF THE RESTAURANT HAS A COMBINED WATER AND FIRE SPRINKLER SERVICE, THE INCOMING WATER SERVICE SHALL BE SIZED BASED ON THE FIRE SPRINKLER CONTRACTOR'S HYDRAULIC CALCULATIONS.
5. PROVIDE A MINIMUM ½" ANNULAR CLEARANCE AROUND ALL PIPE SLAB PENETRATIONS.
6. A REDUCED PRESSURE PRINCIPLE BACKFLOW PREVENTER (RPZ) SHALL BE INSTALLED AT THE INCOMING SERVICE WHERE REQUIRED BY CODE.
7. AN EXPANSION TANK SHALL BE INSTALLED ON THE COLD WATER LINE INLET TO THE WATER HEATER. SEE EXPANSION TANK SCHEDULE.
8. ALL WATER SUPPLY PIPE WITHIN 5 FT. OF THE BUILDING AND INSIDE THE BUILDING SHALL COMPLY WITH NSF 61 AND SHALL BE TYPE L COPPER TUBING, COPPER PIPE OR CPVC PIPE.
9. CPVC PIPE SHALL BE FLOWGUARD GOLD OR FLOWGUARD BENDABLE AS MANUFACTURED BY LUBRIZOL.
10. CPVC PIPE SHALL BE CONNECTED WITH FLOWGUARD GOLD YELLOW LOW-VOC SOLVENT CEMENT AS MANUFACTURED BY IPS WELD-ON OR OATEY.
11. ALL CPVC PIPE SHALL BE INSULATED TO PREVENT EXPOSURE TO GREASE.
12. ALL SUSPENDED PIPE SHALL BE SUPPORTED AS FOLLOWS:

MATERIAL	MAX. HORIZ. SPACING	MAX. VERT. SPACING
COPPER PIPE	12 FT.	10 FT.
COPPER TUBING ≤1¼"	6 FT.	10 FT.
COPPER TUBING >1½"	10 FT.	10 FT.
CPVC ≤1"	3 FT.	10 FT.
CPVC ≥1¼"	4 FT.	10 FT.

13. A REDUCED PRESSURE PRINCIPLE BACKFLOW PREVENTER (RPZ) SHALL BE INSTALLED AT THE INLET TO THE WATER FILTRATION SYSTEM. ALL PIPING DOWNSTREAM OF THE RPZ SHALL BE COPPER OR CROSS-LINKED POLYETHYLENE (PEX).
14. ALL DEVICES, APPLIANCES, AND APPARATUS INTENDED TO SERVE SOME SPECIAL FUNCTION SHALL BE PROVIDED WITH PROTECTION AGAINST BACKFLOW AND CONTAMINATION OF THE WATER SUPPLY SYSTEM. ALL BACKFLOW PREVENTION DEVICES SHALL BE ASSE LISTED AND APPROVED FOR THE DEVICE OR APPLIANCE THEY SERVE.
15. ALL WATER SUPPLY LINES SHALL BE PROVIDED WITH A QUARTER-TURN SHUT-OFF VALVE BEFORE FINAL CONNECTION TO EQUIPMENT.
16. QUARTER-TURN SHUT-OFF VALVES SHALL BE INSTALLED UPSTREAM OF ANY INLINE BACKFLOW PREVENTION DEVICE.
17. ALL VALVES AND BACKFLOW PREVENTION DEVICES SHALL BE INSTALLED WITH FITTINGS THAT FACILITATE REMOVAL IN CASE OF FAILURE.
18. ALL OVERHEAD WATER LINES SHALL BE INSULATED WITH 1" THICK EXTERNAL JACKETED INSULATION AND A MINIMUM INSTALLED R-VALUE OF 3.7.
19. PRIOR TO BUILDING TURNOVER, THE DOMESTIC WATER SUPPLY SYSTEM SHALL BE PURGED OF DELETERIOUS MATERIAL AND DISINFECTED. DISINFECTION SHALL BE DONE IN ACCORDANCE WITH THE LOCAL HEALTH CODE, PLUMBING CODE OR IN ACCORDANCE WITH AWWA C651 OR AWWA C652.

STORM DRAINAGE SYSTEMS:

1. ALL ROOF DRAINS SHALL BE SIZED IN ACCORDANCE WITH LOCAL CODES AND SHALL CONFORM TO ASME A112.21.2M OR A112.3.1.
2. ALL STORM DRAINAGE PIPING SHALL BE ABS, PVC TYPE DWV OR CAST-IRON WHERE REQUIRED BY CODE.
3. ALL SUSPENDED STORM DRAINAGE PIPE SUPPORT REQUIREMENTS SHALL BE THE SAME AS THE SANITARY AND VENT REQUIREMENTS.
4. ALL HORIZONTAL STORM DRAINAGE PIPE PITCH REQUIREMENTS SHALL BE THE SAME AS THE SANITARY AND VENT REQUIREMENTS.
5. ALL HORIZONTAL STORM DRAINAGE PIPE SHALL BE INSULATED WITH 1" THICK EXTERNAL JACKETED INSULATION AND A MINIMUM INSTALLED R-VALUE OF 3.7 TO PROTECT AGAINST CONDENSATION.
6. CLEANOUTS SHALL BE INSTALLED IN ALL HORIZONTAL DRAINAGE PIPE AND SHALL BE LOCATED NOT MORE THAN 100 FT. APART.
7. CLEANOUTS SHALL BE INSTALLED AT ALL CHANGES OF DIRECTION GREATER THAN 45 DEGREES. WHERE MORE THAN ONE CHANGE OF DIRECTION OCCURS IN A SINGLE PIPE RUN, ONLY ONE (1) CLEANOUT SHALL BE REQUIRED FOR EVERY 40 FEET OF DEVELOPED LENGTH.
8. CLEANOUTS SHALL BE INSTALLED ON PIPES PRIOR TO ANY SLAB PENETRATION.
9. WHERE PIPING IS LOCATED WITHIN WALL CAVITIES, ACCESS TO THE CLEANOUTS SHALL BE PROVIDED.
10. ROOF DRAINS AND OVERFLOW ROOF DRAINS SHALL BE PIPED INDEPENDENTLY. OVERFLOW ROOF DRAINS SHALL NOT BE CONNECTED TO THE PRIMARY ROOF DRAINAGE SYSTEM.

Grease Interceptor Sizing (MPC)

DFU	INTERCEPTOR VOLUME (GAL)
8	500
21	750
35	1000
90	1250
172	1500
216	2000
REQUIRED SIZE	1250
SIZE INSTALLED	1500

LEGEND

	COLD WATER PIPING
	TEMPERED WATER PIPING (110°F)
	HOT WATER PIPING (140°F)
	RECIRCULATED HOT WATER PIPING
	OVERHEAD LINES (BY P.C.)
SAN	UNDERGROUND SANITARY PIPING
GW	UNDERGROUND GREASE WASTE PIPING
	VENT PIPING
ST	ABOVE GROUND STORM PIPING
ST	UNDERGROUND STORM PIPING
	HOSE BIBB
OR	CHECK VALVE
	BALL VALVE
	THERMOSTATIC MIXING VALVE
	FLOOR DRAIN
	CLEAN-OUT (FLOOR OR YARD)
	FLOOR SINK
	PRESSURE GUAGE
	LOW PRESSURE SWITCH
	HIGH PRESSURE SWITCH
	SOLENOID VALVE
	THREE-WAY VALVE
	PRESSURE REGULATOR
	DUAL CHECK VALVE OR RPZ
	DUAL CHECK VALVE WITH ATMOSPHERIC VENT
	STRAINER
	RELIEF VENT
	FULL-PORT BALL VALVE
	PUMP
	BACK FLOW PREVENTER

ABBREVIATIONS

ACM	AREA CONSTRUCTION MANAGER
AVB	ATMOSPHERIC VACUUM BREAKER
BSI	BEVERAGE SYSTEM INSTALLER
CO	CLEAN-OUT
DC	DOWNSPOUT COVER
DFU	DRAINAGE FIXTURE UNIT(S)
EC	ELECTRICAL CONTRACTOR
FAC	FIRE ALARM CONTRACTOR
FCO	FLOOR CLEAN-OUT
FD	FLOOR DRAIN
FPC	FIRE PROTECTION CONTRACTOR
FS	FLOOR SINK
GC	GENERAL CONTRACTOR
GI	GREASE INTERCEPTOR
GPF	GALLONS PER FLUSH
GPM	GALLONS PER MINUTE
GW	GREASE WASTE
HS	HAND SINK
I.P.S.	IRON PIPE SIZE (ALSO NPS)
KEI	KITCHEN EQUIPMENT INSTALLER
KES	KITCHEN EQUIPMENT SUPPLIER
LAV	LAVATORY
MC	MECHANICAL CONTRACTOR
MHT	MALE HOSE THREADS
MS	MOP SINK
NPS	NATIONAL PIPE THREAD STANDARD
NPT	NATIONAL PIPE THREAD TAPERED
O/O	OWNER/OPERATOR
OH	OVERHEAD
P	PUMP
PC	PLUMBING CONTRACTOR
RC	REFRIGERATION CONTRACTOR
RPZ	REDUCED PRESSURE PRINCIPLE BACKFLOW PREVENTER
SAN	SANITARY SEWER
ST	STORM SEWER
SVB	ANTI-SIPHON, SPILL RESISTANT VACUUM BREAKER
TAB	TEST AND BALANACE CONTRACTOR
UG	UNDERGROUND
UR	URINAL
V	VENT
WC	WATER CLOSET
WCO	WALL CLEAN-OUT
WSFU	WATER SUPPLY FIXTURE UNIT(S)
YCO	YARD CLEAN-OUT

REV	DATE	DESCRIPTION	BY
	01/23/20	PERMIT SET	WLW
	01/13/20	USRD PROGRESS SET REVIEW	WLW

emanuelson-podas
consulting engineers
Emanuelson-Podas, Inc.
7205 Bush Lake Road
Edina, MN 55439
(952) 930-0050 | www.epinc.com

3801.0037

MICHAEL WEBERT LICENSED 17648 KANSAS PROFESSIONAL ENGINEER

01/23/20

PREPARED BY:

© 2020 McDonald's USA, LLC

PREPARED FOR: McDonald's USA, LLC

These drawings and specifications are the confidential and proprietary property of McDonald's USA, LLC and shall not be copied or reproduced without written authorization. The contract documents were prepared for use on this specific site in conjunction with its issue date and are intended to be used only in its entirety. Any re-use of these drawings for reference or example on another project requires the services of properly licensed architects and engineers. Reproduction of the contract documents for reuse on another project is not authorized.

DRAWN BY: MJW
STD ISSUE DATE: 2019_11
REVIEWED BY: WLW
DATE ISSUED: 01-23-20
RQ#19175

TITLE: 2019 STANDARD BUILDING – BB20 4597F10-WOOD/WOOD

DESCRIPTION: WOOD BEARING WALLS W/FIBER CEMENT SIDING & CI WOOD ROOF TRUSS FRAMING FIBER CEMENT PANEL/BATTEN/ALPOLIC PANEL/BRICK EXT. FINISH

SITE ID: 015-0071
SITE ADDRESS: 605 SOUTH 7TH STREET, KANSAS CITY, KS

SHEET NO. 015-0071.00.0
P4.0
GENERAL NOTES

COORDINATION SCHEDULE

GENERAL REQUIREMENTS	FURNISH	INSTALL	FINAL CONNECTION	NOTES
MECHANICAL PERMIT	MC			1–3
HOT WORK (WELDING) PERMIT (IF APPLICABLE)	KES			1–3
REFRIGERATION PERMIT (IF APPLICABLE)	MC			1–3
PLUMBING PERMIT	PC			1–3
ELECTRICAL PERMIT	EC			1–3
FIRE SPRINKLER PERMIT (IF APPLICABLE)	FPC			1–3
FIRE ALARM PERMIT (IF APPLICABLE)	FAC			1–3
CONTRACTOR COORDINATION REQUIREMENTS				
HEATING & AIR–CONDITIONING				
ROOFTOP UNITS, INTAKE AND RELIEF	MC	MC		1–5, 17, 22
ROOF CURBS	MC	MC		1–3, 20, 22
GAS PIPING AND GAS PIPE KIT	PC	PC	PC	1–3, 14, 22–23
CONTROLS WIRING	MC	EC	EC	1–3, 19, 22, 24
POWER WIRING	EC	EC	EC	1–3, 19, 22, 24
CONDENSATE TRAP	MC	PC		1–3, 22–23
CONDENSATE PIPING (IF APPLICABLE)	PC	PC		1–3, 22–23
DUCT–MOUNTED SMOKE DETECTOR	MC	MC	EC	1–3, 22, 24
GENERAL EXHAUST SYSTEMS				
EXHAUST FANS	MC	MC		1–3, 17, 22
ROOF CURBS	MC	MC		1–3, 22
CONTROLS (WHERE APPLICABLE)	MC	EC	EC	1–3, 22, 24
POWER WIRING	EC	EC	EC	1–3, 22, 24
TEMPERATURE CONTROLS				
THERMOSTATS & SUBBASES	MC	MC	EC	1–3, 22, 24
REMOTE SENSORS (RH AND/OR TEMPERATURE)	MC	MC	EC	1–3, 22, 24
CONTROLS WIRING (WHERE APPLICABLE)	MC	EC	EC	1–3, 22, 24
POWER WIRING	EC	EC	EC	1–3, 22, 24
DUCTWORK AND ACCESSORIES				
GALVANIZED SHEET METAL DUCTWORK	MC	MC		1–3, 22
EXTERNAL INSULATION	MC	MC		1–3, 22
INTERNAL INSULATION (IF APPLICABLE)	MC	MC		1–3, 22
WEATHERPROOFING (IF APPLICABLE)	MC	MC		1–3, 22
SPIN–IN COLLARS	MC	MC		1–3, 22
FLEXIBLE DUCTWORK	MC	MC		1–3, 22
VOLUME/BALANCING DAMPERS	MC	MC		1–3, 22
FIRE DAMPERS (IF APPLICABLE)	MC	MC		1–3, 22
FIRESTOPPING (IF APPLICABLE)	MC	MC		1–3, 22
AIR DEVICES AND ACCESSORIES	MC	MC	MC	1–3, 7, 22, 28
PLUMBING SYSTEMS				
WATER HEATERS	PC	PC	PC	1–3, 11–12, 23
HOT AND COLD WATER PIPE	PC	PC	PC	1–3, 23
VENTS AND INTAKES	PC	PC	PC	1–3, 23
THERMOSTATIC MIXING VALVE	PC	PC	PC	1–3, 23
POWER AND CONTROL WIRING	EC	EC	EC	1–3, 23–24
KITCHEN EXHAUST SYSTEMS				
McDONALD'S BACKSHELF EXHAUST HOODS	KES	KEI		1–3, 6, 22, 27
CANOPY EXHAUST HOODS (IF APPLICABLE)	KES	KEI		1–3, 6, 22, 27
BLACK IRON DUCTWORK	KES	KEI		1–3, 6, 22
STAINLESS STEEL DUCTWORK (IF APPLICABLE)	KES	KEI		1–3, 6, 22
ALUMINUM DUCTWORK (IF APPLICABLE)	KES	KEI		1–3, 6, 22
UL LISTED DUCT WRAP	MC	MC		1–3, 6, 22
FIRE–RATED DUCT ENCLOSURE (IF APPLICABLE)	GC	GC		1–3, 6, 20, 22
EXHAUST FANS	MC	MC		1–3, 6, 17, 22
ROOF CURBS	MC	MC		1–3, 6, 20, 22
CURB EXTENSIONS	MC	MC		1–3, 6, 22
CONTROLS (WHERE APPLICABLE)	EC	EC	EC	1–3, 6, 22, 24
POWER WIRING	EC	EC	EC	1–3, 6, 22, 24
FIRE SUPPRESSION SYSTEM	KES	KES	KES	1–3, 16, 22, 27
KITCHEN EQUIPMENT				
COOLER/FREEZER	KES	GC		1–3, 27
EVAPORATOR COILS	KES	MC		1–3, 27
CONDENSATE PIPING	PC	PC	PC	1–3, 23, 27
REMOTE CONDENSING UNIT (MAC)	KES	MC		1–3, 22, 27
ROOF CURBS	MC	MC		1–3, 22
REFRIGERANT PIPING	KES	MC	MC	1–3, 22, 27
POWER WIRING	EC	EC	EC	1–3, 22, 24, 27
CONTROL WIRING	EC	EC	EC	1–3, 24, 27
PIPE PORTALS	MC	MC		1–3, 22
ICE MACHINES	KES	KEI		1–3, 27
WATER SUPPLY PIPING	KES	KEI	BSI	1–3, 27
REMOTE CONDENSING UNITS	KES	MC		1–3, 22, 27
ROOF CURBS	MC	MC		1–3, 22, 27
REFRIGERANT PIPING	KES	MC	MC	1–3, 22, 27
POWER WIRING	EC	EC	EC	1–3, 22, 24, 27
CONTROL WIRING	KES	EC	EC	1–3, 24, 27
PIPE PORTALS	MC	MC		1–3, 22
GRILLS	KES	KES		1–3, 27
GAS PIPING (IF APPLICABLE)	PC	PC	PC	1–3, 23, 27
POWER WIRING	EC	EC	EC	1–3, 24, 27
CONTROL CABLE (6' CLAMSHELL ONLY)	MC	EC	EC	1–3, 23, 24, 27
FRYERS	KES	KES		1–3, 27
GAS PIPING (IF APPLICABLE)	PC	PC	PC	1–3, 23, 27
POWER WIRING	EC	EC	EC	1–3, 24, 27
3–COMPARTMENT SINK	KES	KES		1–3, 12, 27
FAUCETS AND PRE–RINSE SPRAYER	KES	KES		1–3, 27
WATER SUPPLY PIPING	PC	PC	PC	1–3, 23, 27
SANITARY DRAIN PIPING	PC	PC	PC	1–3, 23, 27
HAND SINKS	PC	PC		1–3, 23, 27
FAUCET	PC	PC		1–3, 23, 27
WATER SUPPLY PIPING	PC	PC	PC	1–3, 23, 27
SANITARY DRAIN PIPING	PC	PC	PC	1–3, 23, 27
VEGETABLE SINK	KES	KES		1–3, 23, 27
FAUCET	KES	KES		1–3, 23, 27
WATER SUPPLY PIPING	PC	PC	PC	1–3, 23, 27
SANITARY DRAIN PIPING	PC	PC	PC	1–3, 23, 27
WASHING MACHINE	KES	KES		1–3, 23, 27
WATER SUPPLY PIPING	PC	PC	PC	1–3, 23, 27
SANITARY DRAIN PIPING	PC	PC	PC	1–3, 23, 27
WARE WASHER	KES	KES		1–3, 23, 27
WATER SUPPLY PIPING	PC	PC	PC	1–3, 23, 27
SANITARY DRAIN PIPING	PC	PC	PC	1–3, 23, 27
MISCELLANEOUS ITEMS				
FIRE SPINKLER SYSTEMS	FPC	FPC	FPC	1–3, 15, 25
HVAC EQUIPMENT START–UP	MC			1–3, 22
TEST, ADJUST AND BALANCE HVAC SYSTEMS	TAB			1–3, 22
DOOR GRILLES (IF APPLICABLE)	MC	GC		1–3, 20, 22
ROOF/WALL OPENINGS	GC			1–3, 20–24
APPLIANCE BACKFLOW PREVENTION	KES/BSI	PC	PC	1–3, 23, 27
CO2 DETECTION SYSTEM	MC	EC	EC	1–3, 22, 27

NOTES:
1. THIS SCHEDULE IS INTENDED AS A GUIDE FOR THE WORK TO BE PERFORMED. ALL WORK SHALL BE COORDINATED BETWEEN THE McDONALD'S AREA CONSTRUCTION MANAGER AND ALL GC AND O/O SUBCONTRACTORS.
2. ONE (1) COPY OF THE DECOR PACKAGE DRAWINGS SHALL BE SUPPLIED TO THE GENERAL CONTRACTOR AND EACH OF THE SUBCONTRACTORS. IT SHALL BE THE RESPONSIBILITY OF THE GENERAL CONTRACTOR AND THE SUBCONTRACTORS TO INSURE THAT THEY HAVE RECEIVED THE DECOR PACKAGE DRAWINGS.
3. FOR ANY WORK NOT CLARIFIED IN THIS SCHEDULE OR IN THE NOTES AND SPECIFICATIONS, PLEASE CONSULT THE McDONALD'S CONSTRUCTION MANAGER FOR SCOPE OF WORK.
4. ALL ROOFTOP UNIT EQUIPMENT SUPPLIED BY THE MECHANICAL CONTRACTOR AND THE KITCHEN EQUIPMENT SUPPLIER SHALL BE ON SITE AT THE SAME TIME FOR A SINGLE CRANE LIFT. EQUIPMENT SITE ARRIVAL DATE SHALL BE COORDINATED BETWEEN THE CONSTRUCTION MANAGER, MECHANICAL CONTRACTOR AND KITCHEN EQUIPMENT SUPPLIER.
5. ALL ROOFTOP UNITS INSTALLED IN McDONALD'S RESTAURANTS SHALL BE HIGH EFFICIENCY EQUIPMENT. THE INSTALLATION OF STANDARD EFFICIENCY ROOFTOP UNITS IS PROHIBITED.
6. ALL KITCHEN EQUIPMENT REQUIRING EXHAUST SHALL BE INSTALLED IN ACCORDANCE WITH THESE PLANS. ANY VARIATION FROM THESE PLANS SHALL BE REPORTED TO THE CONSTRUCTION MANAGER AND THE ENGINEER–OF–RECORD.
7. WHERE GYPSUM BOARD CEILINGS ARE INSTALLED, THE MECHANICAL CONTRACTOR SHALL SUPPLY DRYWALL MOUNTING FRAMES FOR LAY–IN TYPE DIFFUSERS.
8. ALL WORK SHOWN ON P1.6 DRAWING(S) SHALL BE COMPLETED BY THE BEVERAGE SYSTEM INSTALLER (OR K.E.S.) UNLESS OTHERWISE NOTED IN THE PLUMBING DRAWINGS.
9. ALL WORK ON P1.0 & P1.2 DRAWING(S) SHALL BE BY THE PLUMBING CONTRACTOR.
10. THE BEVERAGE SYSTEM INSTALLER FURNISHES, RUNS AND CONNECTS ALL FLEXIBLE WATER AND SYRUP LINES FOR ALL AFFECTED EQUIPMENT INCLUDING THE FOLLOWING:
    A. HOT CHOCOLATE
    B. COFFEE BREWER
    C. ICE MACHINE
    D. O.J.
    E. SODA TOWERS
11. ALL WATER HEATERS INSTALLED IN McDONALD'S RESTAURANTS SHALL BE HIGH EFFICIENCY SEALED–COMBUSTION WATER HEATERS. THE INSTALLATION OF STANDARD EFFICIENCY GRAVITY–VENTED WATER HEATERS IS PROHIBITED.
12. THE CONSTRUCTION MANAGER, PLUMBING CONTRACTOR AND KITCHEN EQUIPMENT SUPPLIER SHALL COORDINATE WHICH SOILED DISHWASHER (3–COMPARTMENT SINK) IS BEING INSTALLED IN THE RESTAURANT.
13. ALL GAS PIPING FOR COOKING EQUIPMENT SHALL TERMINATE IN THE CEILING PRIOR TO THE INSTALLATION OF THE PIPING CHASE. UPON INSTALLATION OF THE CHASE, THE GAS PIPING SHALL THEN BE CONTINUED IN THE CHASE FOR FINAL CONNECTION TO THE APPLIANCE.
14. ALL GAS PIPING FOR ROOFTOP EQUIPMENT SHALL BE BROUGHT UP THROUGH THE BASE OF THE UNIT TO MINIMIZE ROOF PENETRATIONS. WHERE THIS IS NOT POSSIBLE, THE PLUMBING CONTRACTOR SHALL PROVIDE THE NECESSARY PIPE PORTALS ON ROOF.
15. ALL FIRE PROTECTION DRAWINGS CONTAINED WITHIN THIS SET ARE STRICTLY FOR REFERENCE ONLY. FIRE SPRINKLER DRAWINGS SHALL BE DESIGNED AND PERMITTED BY A FIRE PROTECTION CONTRACTOR.
16. ALL R–102 WET CHEMICAL FIRE SUPPRESSION SYSTEMS FOR TYPE I HOODS SHALL BE DESIGNED AND INSTALLED BY A LOCAL ANSUL AGENT. THE USE OF DRY CHEMICAL SYSTEMS IS PROHIBITED. THE LOCAL ANSUL AGENT CONTRACT IS HANDLED THROUGH THE KITCHEN EQUIPMENT SUPPLIER.
17. ALL ROOFTOP UNITS AND EXHAUST FANS ARE SUPPLIED WITH A FACTORY–INSTALLED DISCONNECT SWITCH.
18. ELECTRICAL CONTRACTOR SHALL PROVIDE DISCONNECT SWITCHES FOR REMOTE CONDENSING UNITS.
19. ALL ELECTRICAL CONDUITS FOR ROOFTOP EQUIPMENT SHALL BE BROUGHT UP THROUGH THE BASE OF THE UNIT TO MINIMIZE ROOF PENETRATIONS. WHERE THIS IS NOT POSSIBLE, THE ELECTRICAL CONTRACTOR SHALL PROVIDE THE NECESSARY PIPE PORTALS ON ROOF.
20. SEE ARCHITECTURAL DRAWINGS FOR ADDITIONAL INFORMATION.
21. SEE STRUCTURAL DRAWINGS FOR ADDITIONAL INFORMATION.
22. SEE MECHANICAL DRAWINGS FOR ADDITIONAL INFORMATION.
23. SEE PLUMBING DRAWINGS FOR ADDITIONAL INFORMATION.
24. SEE ELECTRICAL DRAWINGS FOR ADDITIONAL INFORMATION.
25. SEE FIRE PROTECTION DRAWINGS FOR ADDITIONAL INFORMATION.
26. SEE FIRE ALARM DRAWINGS FOR ADDITIONAL INFORMATION.
27. SEE KITCHEN DRAWINGS FOR ADDITIONAL INFORMATION.
28. SEE DECOR DRAWINGS FOR ADDITIONAL INFORMATION.

EXPANSION TANK SCHEDULE

TAG	MANUFACTURER	MODEL	TOTAL VOL.	CONNECTION	ACCESSORIES
ET–1	AMTROL	ST–12	4.4 GAL.	¾"	–

NOTES:
1. SEE DETAIL 6 ON DRAWING P3.0

PUMP SCHEDULE

TAG	MANUFACTURER	MODEL	HP	V	Ø	Hz	ACCESSORIES
P–1	GRUNDFOS	UP 15–18 B7	1/25	120	1	60	1–3

ACCESSORIES:
1. TIMECLOCK
2. AQUASTAT
3. CHECK VALVE

NOTES:
1. SEE ELECTRICAL DRAWINGS FOR TIMECLOCK WIRING
2. DESIGN: 2 GPM, 7 FT. HEAD
3. SEE DETAIL 6 ON DRAWING P3.0

BACKFLOW PREVENTER SCHEDULE

TYPE	MFR.	MODEL	ASSE LISTING	SERVES	LOCATION
AG	FURN. WITH CHEM. SYS.		1055B	CHEMICAL SYSTEM	DIN. RM.–MOP SINK
AG	FURN. WITH CHEM. SYS.		1055B	CHEMICAL SYSTEM	KITCHEN–MOP SINK
AVB	FURN. WITH CHEM. SYS.		1001	CHEMICAL SYSTEM	SUPP. RM.–3–COMP
AVB	FURN. WITH FAUCET		–	MOP SINK FAUCET	SEE DRAWINGS
VB	FURN. WITH HB		1012	WALL HYDRANT	SEE DRAWINGS
DCV	FURN. WITH HB		1052	YARD HYDRANT	TRASH CORRAL
DCV	FURN. WITH HB		1052	ROOF HYDRANT	ROOF
DCV	WATTS	SD–3	1022	SODA TOWERS AND SPEC. COFFEE	
RPZ	WILKINS	375XL–SXL–AG	1013	INCOMING WATER	SUPPORT ROOM
RPZ	WILKINS	375XL–AG	1013	FILTRATION SYSTEM	SUPPORT ROOM
PVB	WATTS	WA800M4QT–100	1020	IRRIGATION SYSTEM	IRRIGATION SYSTEM

WATER HEATER SCHEDULE

TAG	MANUFACTURER	MODEL	SIZE GAL.	HEATING TYPE	HEATING KW	RECOV. 100°F ΔT GPH	ELECTRICAL VOLTS	Ø	Hz	F.L.A.
WH–1	BRADFORD–WHITE	M–11–120A–54–3	119	ELEC	54	223	208	3	60	150
	A.O. SMITH	DRE–120–54	119			221				

ACCESSORIES:
1. NSF INSTALLATION KIT

VALVE SCHEDULE

MANUFACTURER	MODEL	TEMP. SETTING	LISTING	SERVES
WATTS	LFMMV	110°F	ASSE 1017,1069,1070	CHEMICAL SYSTEM MIXING
WATTS	LFMMV	104°F	ASSE 1017,1069,1070	LAVS & HAND SINKS MIXING
ZURN	ZW3870XLT	104°F		
WATTS	LFUSG–B	110°F	ASSE 1016, 1070	VEGETABLE PREP. SINK MIXING
B & G	CB–1/2	–	–	RECIRC. SYSTEM BALANCING VALVE
NIBCO	585–70–HC	–	–	CHEMICAL SYSTEM SHUT–OFF
NIBCO	S–FP–600A–LF	–	–	RESTROOM SHUT–OFF
NIBCO	S–FP–600A–LF	–	–	COMBI OVEN WATER SHUT OFF
WATTS	LFFBV–PEX	–	–	COMBI OVEN RO WATER SHUT OFF

INTERCEPTOR SCHEDULE

TAG	DESCRIPTION	MANUFACTURER	MODEL	ACCESSORIES	NOTES
GI–1	EXTERIOR GREASE INTERCEPTOR	PRECAST CONCRETE	1500 GALLONS		1–4
		ZURN	PROCEPTOR MODEL GMC1300–UPC	4" INLET, 4" OUTLET	1–2,4

NOTES:
1. SEE GREASE INTERCEPTOR NOTES ON DRAWING P4.0
2. GREASE INTERCEPTOR IS SIZED FOR CITY SEWER APPLICATIONS ONLY. DO NOT USE FOR SEPTIC FIELDS.
3. INTERIOR OF PRECAST CONCRETE SHALL BE COATED WITH TWO (2) LAYERS OF NOVOLAC EPOXY.
4. FOR ZURN PROCEPTOR ORDERING, CONTACT HUGHES SUPPLY, DIRECT LINE: (407) 244–7918, OR E–MAIL: MCDCOORD@HAJOCA.COM

PLUMBING FIXTURE SCHEDULE[1]

TAG	DESCRIPTION	MANUFACTURER	MODEL	WATER USE	ACCESSORIES/COMMENTS	
F–1	FAUCET FOR LAV–1 & LAV–2	TOTO	TEL101–D10E#CP	1.0 GPM (0.17 GAL/10 SEC CYCLE)	FAUCET OPERATION: SENSOR	
		ZURN	Z6950–XL–S–10S–LL			
F–2	FAUCET FOR MS–1	ZURN	Z843M4		FAUCET OPERATION: MANUAL SEE DETAIL 2 ON DRAWING P3.0	5' VINYL HOSE WALL HOOK
FCO	6x6 FLOOR CLEAN OUT	ZURN	Z1400–SZ		SEE DRAWINGS FOR PIPE SIZES SEE NOTE 8	
		JAY R. SMITH	4040			
FD–1	6x6 FLOOR DRAIN WITH FUNNEL	ZURN	Z415–SZ–OF		PIPE SIZE: 3" STRAINER SIZE: 6" NICKEL BRONZE	FUNNEL: ZURN Z329 OVAL SEE NOTE 8
		JAY R. SMITH	3510–F25			
FD–2	6x6 FLOOR DRAIN	ZURN	Z415–SZ		PIPE SIZE: 3" STRAINER SIZE: 6" NICKEL BRONZE	FUNNEL: NONE SEE NOTE 8
		JAY R. SMITH	2005			
FD–3	6x6 FLOOR DRAIN WITH FUNNEL	ZURN	Z415–SZ–OF		PIPE SIZE: 4" STRAINER SIZE: 6" NICKEL BRONZE	FUNNEL: ZURN Z329 OVAL SEE NOTE 8
		JAY R. SMITH	3510–F25			
FD–4	6x6 FLOOR DRAIN	ZURN	Z415–SZ		PIPE SIZE: 4" STRAINER SIZE: 6" NICKEL BRONZE	FUNNEL: NONE SEE NOTE 8
		JAY R. SMITH	2005			
FS–1	12x12 FLOOR SINK WITH HALF–GRATE	ZURN	ZN1901		PIPE SIZE: 3" DOME STRAINER: ALUMINUM	GRATE: HALF – NICKEL–BRONZE SEE NOTE 8
		JAY R. SMITH	3435			
FS–2	8x8 FLOOR SINK WITH HALF–GRATE	ZURN	ZN1910		PIPE SIZE: 3" DOME STRAINER: ALUMINUM	GRATE: HALF – NICKEL–BRONZE SEE NOTE 8
		JAY R. SMITH	3415			
FS–3	8x8 FLOOR SINK	ZURN	ZN1910		PIPE SIZE: 3" DOME STRAINER: ALUMINUM	GRATE: FULL – NICKEL–BRONZE SEE NOTE 8
		JAY R. SMITH	3415			
HB–1	WALL HYDRANT	WOODFORD	B65		WALL CLAMP: ADJUSTABLE WALL THICKNESS: M/S = 9½" W/W = 13¾"	SEE NOTE 3
		ZURN	Z1320–EZ			
		JAY R. SMITH	5519			
HB–2	YARD HYDRANT	WOODFORD	S4H		SEE NOTES 4 & 9	
HB–3	ROOF HYDRANT	WOODFORD	RHY2–MS		SEE NOTE 5	
HB–4	GARAGE HYDRANT	WOODFORD	C22CP3		SEE NOTES 4 & 9	
HS–1	STAINLESS STEEL HAND SINK	ADVANCE TABCO	7–PS–61		FAUCET: INCLUDED WITH SINK	SEE NOTES 6,10 & 12
HS–2	STAINLESS STEEL HAND SINK – ADA	ADVANCE TABCO	7–PS–26		FAUCET: INCLUDED WITH SINK	SEE NOTES 6,10 & 12
HS–3	STAINLESS STEEL HAND SINK – SUPER SAVER	ADVANCE TABCO	7–PS–22		FAUCET: INCLUDED WITH SINK	SEE NOTES 6,10 & 12
LAV–1	LAVATORY	KOHLER	K–2882–0		FAUCET: F–1 TRUEBRO LAVGUARD2 MODEL #102–E–Z CORIAN COUNTER BY G.C.	SEE NOTE 10 SEE DETAIL 3 ON P3.0
		TOTO	LT191G#01			
LAV–2	WALL–MOUNTED LAVATORY	KOHLER	K–2084		FAUCET: F–1 TRUEBRO LAVGUARD2 MODEL #102–E–Z SEE NOTES 6 & 10	SEE DETAIL 3 ON P3.0
		–	–			
		–	–			
MS–1	MOP SINK	FIELD FABRICATED	RECESSED – FLOOR (24x24x12)		FAUCET: F–2 INCLUDES HOSE, HOSE BRACKET AND TWO (2) 24"Wx48"H WALL GUARDS SEE DETAIL 2 ON P3.0	
		ADVANCE TABCO	9–OP–24FM			
TD–1	TRENCH DRAIN	ZURN	Z886–SMG		CLASS A STAINLESS STEEL MESH GRATE. NO–HUB BOTTOM OUTLET. BOTTOM DOME STRAINER. CLOSED END CAP.	
UR–1	ADA WALL–HUNG URINAL	TOTO	UT445U#01	0.125 GPF	FLUSH VALVE: TOTO TEU1LA12#CP ZURN ZTR6203–ULF–LL ¾" I.P.S., 1" TOP SPUD	FLUSH VALVE OPERATION: SENSOR SEE NOTE 2
		ZURN	Z5755			
		–	–			
WB–1	WALL BOX FOR WASHING MACHINE	SIOUX CHIEF	696–2313		HAMMER ARRESTERS INCLUDED WITH BOX	SEE NOTE 7
WB–2	WALL BOX FOR WAREWASHER	SIOUX CHIEF	696–1011		HAMMER ARRESTER INCLUDED WITH BOX MOUNTING HEIGHT: 12" A.F.F.	SEE NOTE 7
WC–1	WATER CLOSET	TOTO	CT705EN#01	1.28 GPF	FLUSH VALVE: TOTO TET1LA32#CP ZURN ZTR6200EV–LL 1" I.P.S., 1½" TOP SPUD	FLUSH VALVE OPERATION: SENSOR SEAT: BEMIS MODEL 2155CT SEE NOTE 11
		ZURN	Z5655			
		–	–			
WC–2	ADA WATER CLOSET	TOTO	CT705ELN#01	1.28 GPF	FLUSH VALVE: TOTO TET1LA32#CP ZURN ZTR6200EV–CC–LL 1" I.P.S., 1½" TOP SPUD	FLUSH VALVE OPERATION: SENSOR SEAT: BEMIS MODEL 2155CT SEE NOTE 11
		ZURN	Z5665			
		–	–			
–	3–COMPARTMENT SINK	–	–		ITEM: 151.00	SEE NOTE 7
VS–1	VEGETABLE PREPARATION SINK	–	–		ITEM: 134.02	SEE NOTE 7
–	WAREWASHER	ECOLAB	SUPRA Q2020–V WITH VAPOR VENT HOOD		ITEM: 152.05 WALL BOX: WB–2	SEE NOTE 7
–	WASHING MACHINE	–	–		ITEM: 223.07 WALL BOX: WB–1	SEE NOTE 7
WCO	6x6 WALL CLEAN OUT	ZURN	Z1441–VP		SEE DRAWINGS FOR PIPE SIZES	SEE NOTE 8
			ROOF DRAINS AND ACCESSORIES			
RD–1 THRU RD–4	COMBINATION MAIN ROOF AND OVERFLOW DRAIN	ZURN	Z165		SEE DRAWINGS FOR PIPE SIZES ROOF OPENING: 30"x14"	SEE NOTE 8
DC–1	OVERFLOW DOWNSPOUT NOZZLE	ZURN	Z199–SS		SEE DRAWINGS FOR PIPE SIZES BIRD SCREEN. PROVIDE LAMBS TONGUE	SEE NOTE 8
		JAY R. SMITH	1770–BS			

NOTES:
1. SEE McDONALD'S PROJECT MANUAL FOR ADDITIONAL MANUFACTURERS
2. PLUMBING CONTRACTOR SHALL COORDINATE WITH G.C. TO PROVIDE BLOCKING FOR PROPER URINAL SUPPORT
3. PLUMBING CONTRACTOR SHALL COORDINATE WITH G.C. TO PROVIDE INTERIOR BLOCKING ON W/W BUILDING FOR WALL CLAMP
4. YARD HYDRANT IS FOR TRASH CORRAL – SEE SITE PLAN FOR LOCATION
5. PLUMBING CONTRACTOR SHALL ROUTE ⅞" DRAIN PIPE FROM HOSE BIBB TO NEAREST FLOOR DRAIN OR FLOOR SINK
6. PLUMBING CONTRACTOR SHALL COORDINATE WITH G.C. TO PROVIDE BLOCKING FOR PROPER SINK SUPPORT
7. SEE KITCHEN DRAWINGS FOR ADDITIONAL INFORMATION – PLUMBING CONTRACTOR SHALL COORDINATE INSTALLATION WITH K.E.S.
8. PLUMBING CONTRACTOR SHALL SPECIFY CONNECTION MATERIAL/TYPE WHEN ORDERING
9. PLUMBING CONTRACTOR SHALL SPECIFY BURY DEPTH WHEN ORDERING
10. PLUMBING CONTRACTOR SHALL PROVIDE GRID DRAIN, P–TRAP AND VALVE STOPS FOR ALL SINKS & LAVS
11. WATER CLOSETS MUST MEET ALL REQUIREMENTS OF ANSI STANDARD A112.19.2
12. PROVIDE SIDE SPLASH GUARDS FOR SINKS WITHIN 18" OF WORK SURFACE OR COOKING AREA.

TO ORDER PLUMBING FIXTURES, CONTACT HUGHES SUPPLY:
E–MAIL:
MCDCOORD@HUGHESSUPPLY.COM
OR MCDCOORD@HAJOCA.COM

REV	DATE	DESCRIPTION	BY
-	-	-	-
-	-	-	-
-	-	SERVICE AREA OPTIMIZATION	WLW
-	11/13/20	USRD SAO SET REVIEW	WLW
1	05/05/20	CIVIL & PLAN REVIEW COMMENTS	WLW
-	01/23/20	PERMIT SET	WLW
-	01/13/20	USRD PROGRESS SET REVIEW	WLW

PREPARED BY:

emanuelson-podas
consulting engineers
Emanuelson-Podas, Inc.
7205 Bush Lake Road
Edina, MN 55439
(952) 930-0050 | www.epinc.com

3801.0037

MICHAEL WEBERT LICENSED 17648 KANSAS NATIONAL CONSULTANT

12/03/20

PREPARED FOR:

McDonald's USA, LLC

©2020 McDonald's USA, LLC
These drawings and specifications are the confidential and proprietary property of McDonald's USA, LLC and shall not be copied or reproduced without written authorization. The contract documents were prepared for use on this specific site in conjunction with its issue date and are not to be used for any other purpose or at any other location. Reproduction of these drawings for reference or example on another project requires the services of properly licensed architects and engineers. Reproduction of the contract documents for reuse on another project is not authorized.

DRAWN BY	STD ISSUE DATE	REVIEWED BY	DATE ISSUED
MJW	2019_11	WLW	01–23–20

TITLE: 2019 STANDARD BUILDING – BB20
4597T10–WOOD/WOOD

DESCRIPTION: WOOD BEARING WALLS W/FIBER CEMENT SIDING & CI
WOOD ROOF TRUSS FRAMING
FIBER CEMENT PANEL/BATTEN/ALPOLIC PANEL/BRICK EXT. FINISH

SITE ID: 015–0071
SITE ADDRESS: 605 SOUTH 7TH STREET, KANSAS CITY, KS

RQ#19175

SHEET NO.: 015–0071.00.B
P4.1
SCHEDULES

DO NOT SCALE DRAWING
WORK TO DIMENSIONS

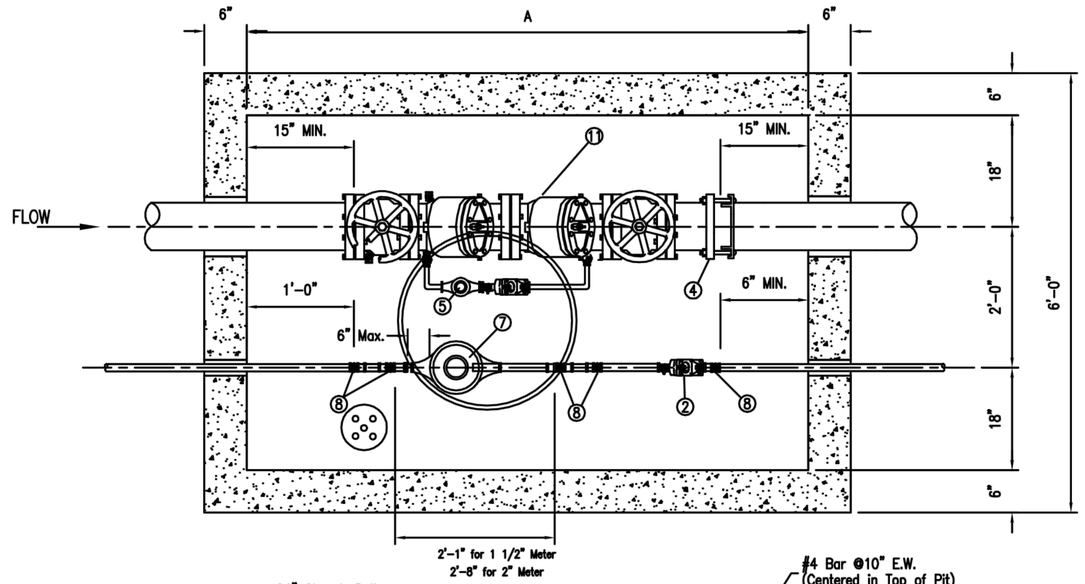

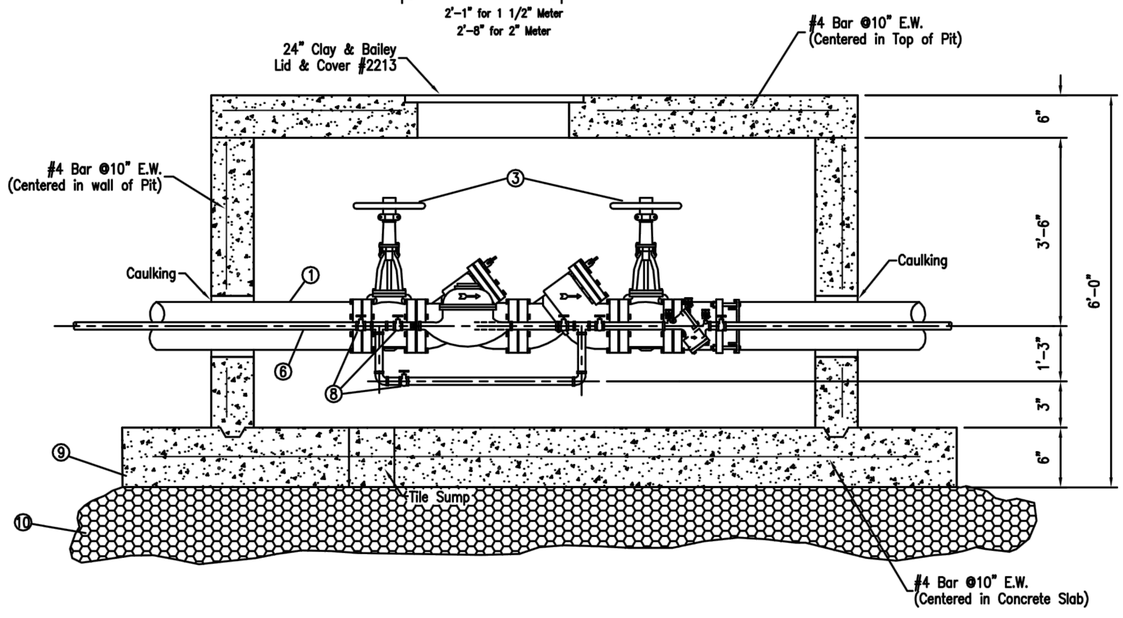

Dimension A
3" – 6"–0"
4" – 7"–0"
6" – 8"–6"

LEGEND

1. Pipe Spool (Flanged Ductile Iron Pipe).
2. Approved double check valve assembly with 4 test cocks (Fitted with brass plugs).
3. O.S.&Y Resilient seated gate valve.
4. Rockwell 913 Steel flanged coupling adapter or approved equal.
5. 5/8" box water meter, Badger Model #25 with read in cubic feet to meet B.P.U. specifications.
6. Brass pipe or rigid copper tubing (sweat).
7. Meter installed by B.P.U.
8. Wheel gate valve or resilient seated ball valve.
9. 10'–6"x 7'–0"x 6" Reinforced concrete slab.
10. 12" of 1/2" or 3/4" crushed rock.
11. Approved double check detector check valve assembly with 4 test cocks(Fitted with brass plugs)

NOTES

1. All backflow prevention assemblies shall be installed horizontally or as approved by BPU.
2. Dimension to be determined by unit installed.
3. AB–3, CA–5 or gravel will not be allowed as back fill material around water service.

BOARD OF PUBLIC UTILITIES
ENGINEERING & TECHNICAL SERVICES
KANSAS CITY, KANSAS

1 1/2"–2" Meter w/ 3", 4", & 6"
Double Check Detector Check
Valve Assembly

DRAWN A.A.G.	DATE 4/1/92	ENGR. APPV. R.W.	
APPV.	DATE	SHEET 9 OF 37	
REV.	DATE	DWG. NO. BF–009a	
TRACED	DATE		
SCALE NONE	W.O.		

REV	DATE	DESCRIPTION	BY
4	05/05/20	CIVIL & PLAN REVIEW COMMENTS	WLW
3	01/23/20	PERMIT SET	WLW
2	01/13/20	USRD PROGRESS SET REVIEW	WLW

emanuelson-podas
consulting engineers
Emanuelson-Podas, Inc.
7705 Bush Lake Road
Edina, MN 55439
(952) 930-0050 | www.epinc.com

3801.0037

MICHAEL WEBERT LICENSED 17648 KANSAS PROFESSIONAL ENGINEER

05/05/20

PREPARED BY:

PREPARED FOR: McDonald's USA, LLC

©2020 McDonald's USA, LLC
These drawings and specifications are the confidential and proprietary property of McDonald's USA, LLC and shall not be copied or reproduced without written authorization. The contract documents were prepared for use on this specific site in conjunction with its issue date and are suitable for use on that date only. Any other use or reuse of these drawings for reference or example on another project requires the services of properly licensed architects and engineers. Reproduction of the contract documents for reuse on another project is not authorized.

DRAWN BY	MJW
STD ISSUE DATE	2019_11
REVIEWED BY	WLW
DATE ISSUED	01–23–20
RO#19175	

TITLE: 2019 STANDARD BUILDING – BB20
4597F10–WOOD/WOOD

DESCRIPTION
WOOD BEARING WALLS W/FIBER CEMENT SIDING & CI
WOOD ROOF TRUSS FRAMING
FIBER CEMENT PANEL/BATTEN/ALPOLIC PANEL/BRICK EXT. FINISH

SITE ID: 015–0071
SITE ADDRESS: 605 SOUTH 7TH STREET, KANSAS CITY, KS

SHEET NO. 015–0071.00.A
P4.2
DETAILS

THE PURPOSE OF THIS SHEET IS TO PROVIDE A CHECKLIST AND VISUAL GUIDE SO THE INSTALLING EC CAN VERIFY THE WORK IS IN COMPLIANCE WITH MCDONALD'S SPECIFICATIONS THAT ARE CRITICAL TO THE PROPER FUNCTIONING OF OUR POINT OF SALE (POS) COMPUTER SYSTEMS.

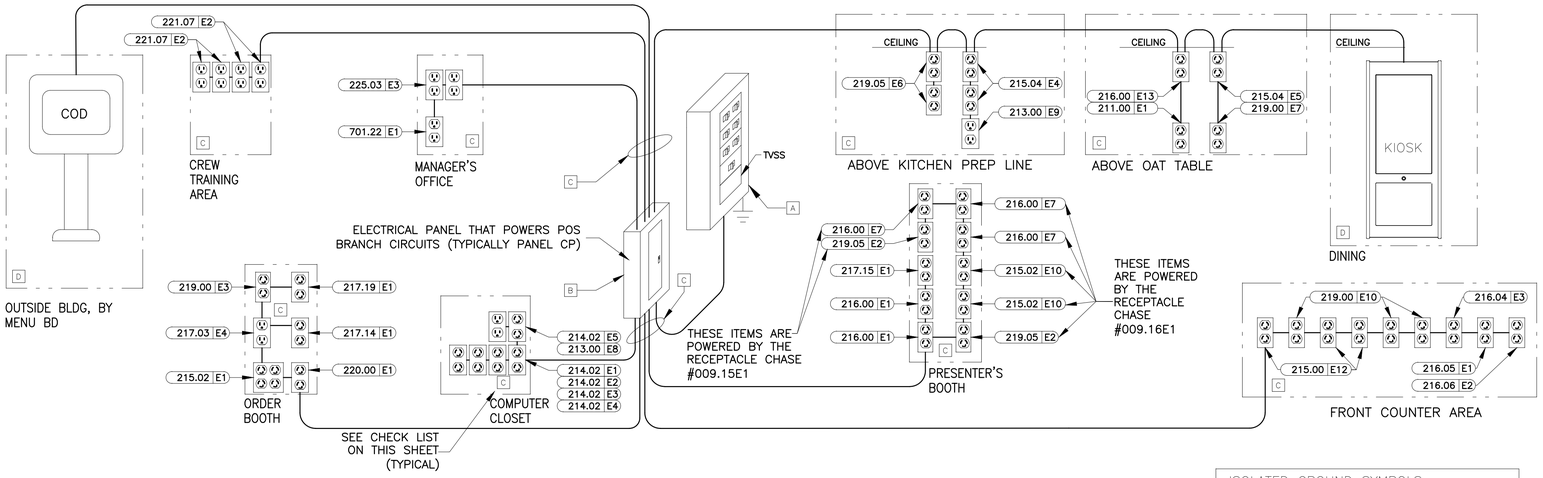

POS ELECTRICAL RISER DIAGRAM

THIS RISER DIAGRAM SHOWS THE ELECTRICAL ROUGH-INS REQUIRED FOR A TYPICAL POINT OF SALE (POS) SYSTEM IN A FREE STANDING 2 BOOTH RESTAURANT. VERIFY ALL POS ROUGH-INS AND MOUNTING HEIGHTS WITH THE ELECTRICAL ROUGH-IN PLAN, NOTES AND INFORMATION DRAWINGS.

ISOLATED GROUND SYMBOLS	
SYMBOL	DESCRIPTION
	IG4710
	IG4700A
	IG5261
	IG5262

LOW VOLTAGE CABLE MANAGEMENT SPECIFICATION

GENERAL/MATERIALS

1. THE GC OR EC SHALL FURNISH AND INSTALL A COMPLETE LOW VOLTAGE CABLE MANAGEMENT SYSTEM UTILIZING CADDY-ERICO TYPE CAT-32 J-HOOK SUPPORTS (2-INCH DIAMETER LOOP MINIMUM). ALL J-HOOKS SHALL;
   - HAVE A MINIMUM BEARING SURFACE OF 1⅜",
   - HAVE FLARED EDGES TO PREVENT DAMAGE TO HIGH PERFORMANCE CABLES,
   - HAVE AN ELECTRO-GALVANIZED FINISH,
   - HAVE 3/8" WIDE CABLE RETAINING STRAPS,
   - BE UL LISTED AND LABELED,
   - BEAR THE UL SYMBOL MARKING ON THE PART FOR IDENTIFICATION
   - BE INSTALLED PER THE MANUFACTURERS INSTALLATION INSTRUCTIONS.
2. THE ENTIRE INSTALLATION SHALL BE IN COMPLIANCE WITH THE NATIONAL ELECTRICAL CODE (NEC), NEC SECTION 800, BICSI STANDARDS 568 & 569, ALL APPLICABLE NATIONAL, STATE, LOCAL, AND SAFETY CODES, AND McDONALD'S SPECIFICATIONS.

INSTALLATION

1. LOW VOLTAGE J-HOOK CABLE PATHWAY (FOR POS CABLING SYSTEM) SHALL BE PROVIDED FROM THE MANAGERS OFFICE (OR COMPUTER CLOSET) DATA CONDUIT STUB-UP LOCATION TO THE FOLLOWING DATA CONDUIT STUB-UP LOCATIONS (AS APPLICABLE):
   - FRONT COUNTER.
   - PRESENTERS BOOTH.
   - CASHIERS BOOTH.
   - THIRD DRIVE-THRU WINDOW(IF PRESENT).
   - CREW ROOM.
   - VALENCE WALL.
   - REMOTE ORDERING STATIONS.
   - NETPOP TELEPHONE PANEL LOCATION.

   CABLE SUPPORTS SHALL BE PROVIDED WITHIN 24 INCHES OF THESE STUB-UP LOCATIONS. ALL STUB-UP CONDUITS SHALL BE PROVIDED WITH AN INSULATED BUSHING TO PROTECT CABLES DURING INSTALLATION.
2. THE LOCATION AND ROUTING OF THE LOW VOLTAGE CABLE MANAGEMENT SYSTEM SHALL BE COORDINATED WITH ALL OTHER CONSTRUCTION TRADES PRIOR TO INSTALLATION TO AVOID CONFLICTS WITH THE OTHER TRADES FINAL INSTALLATIONS, BOTH BEFORE AND AFTER THE CABLE MANAGEMENT SYSTEM AND THE POS CABLING ARE INSTALLED. FINAL INSTALLATION LOCATION SHALL BE READILY ACCESSIBLE TO ALLOW FOR EASE IN INSTALLATION OF THE POS CABLING BY THE POS VENDOR'S INSTALLER.
3. LOW VOLTAGE J-HOOK CABLE SUPPORTS AND APPURTENANCES SHALL BE FASTENED TO THE BUILDING STRUCTURAL AND/OR FRAMING MEMBERS. LOW VOLTAGE J-HOOK CABLE SUPPORTS SHALL NOT BE FASTENED OR UTILIZE THE CEILING GRID SUSPENSION WIRES OR T-BAR GRID FOR INSTALLATION. CONTRACTOR SHALL PROVIDE ALL NECESSARY BRACKETS, HANGERS, RODS, CLAMPS, FLANGES, SUPPORTS, ETC. FOR A COMPLETE AND FULLY FUNCTIONAL SYSTEM. THE INSTALLATION OF THE LOW-VOLTAGE CABLE MANAGEMENT SYSTEM SHALL BE DONE SO THAT THE ROUTING OF THE CABLES IS PARALLEL TO AND/OR PERPENDICULAR TO FRAMING AND STRUCTURAL BUILDING MEMBERS.
4. LOW VOLTAGE J-HOOK **CABLE SUPPORTS** SHALL BE INSTALLED A MAXIMUM OF 36 INCHES APART. AT TRANSITION LOCATIONS, THE CONTRACTOR SHALL PROVIDE ADDITIONAL J-HOOKS TO ALLOW FOR A MINIMUM ONE-FOOT RADIUS BEND AND FOR ADDITIONAL CABLE SUPPORT AT THESE TRANSITION POINTS.
5. TO AVOID **ELECTROMAGNETIC INTERFERENCE** (EMI), ALL PATHWAYS SHALL PROVIDE A MINIMUM CLEARANCE OF 4 FEET (1.2 METERS) FROM MOTORS AND TRANSFORMERS AND A MINIMUM CLEARANCE OF 1 FOOT (0.3 METERS) FROM CONDUIT AND CABLES UTILIZED FOR ELECTRICAL POWER DISTRIBUTION, OR FROM FLUORESCENT OR HID TYPE LIGHTING FIXTURES AND OTHER NON-POS LOW VOLTAGE CONDUCTORS.
6. ANY **CEILING TILES** IN THE AREA WHERE THE LOW-VOLTAGE CABLE MANAGEMENT SYSTEM IS LOCATED SHALL NOT BE INSTALLED UNTIL THE POS VENDOR'S CONTRACTOR COMPLETES THE INSTALLATION OF ALL POS CABLING.
7. ALL NON-POS LOW VOLTAGE CABLING SHALL BE INSTALLED IN A SEPARATE CABLE MANAGEMENT SYSTEM INDEPENDENT OF THE LOW-VOLTAGE CABLE MANAGEMENT SYSTEM UTILIZED FOR THE POS CABLING.
8. THE POS INSTALLER SHALL BE RESPONSIBLE TO FURNISH AND INSTALL ALL LOW VOLTAGE CABLING REQUIRED FOR THE COMPLETE AND FULLY FUNCTIONAL OPERATION OF THE POS SYSTEM. ALL POS CABLING SHALL BE INSTALLED WITHIN THE LOW-VOLTAGE CABLE MANAGEMENT SYSTEM.

ELECTRICAL POS CERTIFICATION

AS OF THE DATE BELOW, I HEREBY CERTIFY THAT ALL ELECTRICAL WORK, ELECTRICAL SERVICE AND ELECTRICAL SYSTEMS, MATERIALS AND LABOR RELATED TO THE POS ELECTRICAL INSTALLATION IN WHICH THE UNDERSIGNED ARE DIRECTLY OR INDIRECTLY RESPONSIBLE HAVE BEEN PROPERLY INSTALLED IN FULL COMPLIANCE WITH ALL CONSTRUCTION DOCUMENTS AND ALL NFPA, BUILDING, ELECTRICAL AND OTHER APPLICABLE CODES, ALONG WITH ALL OF THE REQUIREMENTS OUTLINED ON THIS DRAWING. I FURTHER CERTIFY THAT THE ELECTRIC SERVICE POWERING THE POS SYSTEM HAS BEEN PROPERLY INSTALLED BY A QUALIFIED ELECTRICIAN. SKILLED, KNOWLEDGEABLE AND TRAINED TO INSTALL ALL THE REQUIRED ELECTRICAL DISTRIBUTION COMPONENTS NECESSARY TO POWER THE POINT OF SALE (POS) SYSTEM.

GENERAL CONTRACTOR: _____

BY: _____

DATE: _____

ELECTRICAL CONTRACTOR: _____

BY: _____

DATE: _____

DRAWINGS AND SPECIFICATIONS ARE TO BE CONSIDERED AS SUPPLEMENTING EACH OTHER. WORK SPECIFIED BUT NOT SHOWN ON DRAWINGS, OR SHOWN ON DRAWINGS BUT NOT SPECIFIED, SHALL BE PERFORMED OR FURNISHED AS THOUGH MENTIONED IN BOTH SPECIFICATIONS AND DRAWINGS. IF NOT OTHERWISE DIRECTED, INSTALLATION OF ALL SYSTEMS AND EQUIPMENT SHALL BE IN ACCORDANCE WITH APPLICABLE CODES AND IN ACCORDANCE WITH MANUFACTURER'S INSTALLATION INSTRUCTIONS. WHERE WORK DESCRIBED IN THE SPECIFICATIONS IS IN CONFLICT WITH THE WORK SHOWN ON THE DRAWINGS, THE CONTRACTOR SHALL SUPPLY THE GREATER QUANTITY, QUALITY AND COST VIA THE BID AND CONTACT THE ENGINEER FOR CLARIFICATION ON DIRECTION PRIOR TO INSTALLATION.

PRIOR TO BID, THE CONTRACTOR SHALL REVIEW THE MECHANICAL, ELECTRICAL AND KITCHEN EQUIPMENT DRAWINGS. THE CONTRACTOR SHALL INCLUDE IN HIS BID ALL RELEVANT WORK IN THE ENTIRE SET OF DOCUMENTS AND REPORT ALL DISCREPANCIES BETWEEN THESE DRAWINGS TO THE ENGINEER PRIOR TO BIDDING FOR CLARIFICATION. IF DISCREPANCIES REMAIN UNRESOLVED DUE TO A SHORT TIME FRAME, THE CONTRACTOR SHALL INCLUDE THE MOST WORK AND THE HIGHER COSTS IN THE BID. SOLUTIONS TO UNREPORTED DISCREPANCIES WILL BE DETERMINED BY THE ARCHITECT/ENGINEER, WITH NO ADDITIONAL COMPENSATION DUE TO THE CONTRACTOR.

ALL WORK IS NOT CONSIDERED TO MEET MCDONALD'S SPECIFICATIONS UNTIL THE INSTALLED ELECTRICAL SYSTEM SUPPORTS A "YES" ANSWER FOR ALL QUESTIONS ASKED.

AS PART OF THIS PROCESS, THE EC AND THE GC WILL BE REQUIRED TO SIGN THE ELECTRICAL CERTIFICATION DOCUMENT INDICATING THAT THE INSTALLED ELECTRICAL SYSTEM MEETS MCDONALD'S SPECIFICATIONS.

NOTICE:

CHANGES SHALL NOT BE MADE TO THE POS ELECTRICAL SYSTEM AFTER THE POS EQUIPMENT HAS BEEN INSTALLED WITHOUT FIRST NOTIFYING THE POS VENDOR.

IF CHANGES ARE MADE TO THE POS ELECTRICAL SYSTEM **AFTER** THE CERTIFICATION PROCESS HAS BEEN COMPLETED, THEN A SYSTEM RE-CERTIFICATION SHALL BE REQUIRED.

REWORK ELECTRICAL SYSTEM TO BRING INTO COMPLIANCE WITH MCDONALD'S SPECIFICATIONS

ARE **ALL** BOXES CHECKED "YES"?

YES

NO

FINISHED

THE EC SHALL COMPLETE THE BELOW CHECKLIST TO VERIFY COMPLIANCE WITH MCDONALD'S SPECIFICATIONS.

START HERE

A VISUALLY INSPECT THE MAIN ELECTRICAL PANEL (MDP)

YES NO N/A

1. IS AN **EQUIPMENT GROUND BAR** INSTALLED SUCH THAT IT IS ELECTRICALLY **CONNECTED** TO THE PANEL?
2. DO ALL NEUTRAL CONDUCTORS TERMINATE ONLY TO THE NEUTRAL BAR?
3. DO ALL EQUIPMENT GROUND CONDUCTORS TERMINATE ONLY TO THE EQUIPMENT GROUND BAR?
4. DOES THE ISOLATED GROUND CONDUCTOR (GREEN W/YELLOW STRIPE) TERMINATE ON THE EQUIPMENT GROUND BAR?
5. IS THERE AN APPROPRIATE ELECTRICAL CONNECTION (BOND) BETWEEN THE NEUTRAL BAR AND THE EQUIPMENT GROUND BAR?
6. DOES THE GROUNDING SYSTEM COMPLY WITH MCDONALD'S "BUILDING ELECTRICAL GROUNDING DETAIL"?
7. IS A SURGE PROTECTOR INSTALLED THAT COMPLIES WITH MCDONALD'S "TVSS INSTALLATION GUIDE" OR DETAIL?
8. ARE ALL ELECTRICAL CONNECTIONS (WIRING & BUSING) PROPERLY TIGHTENED?
9. ARE ALL CIRCUIT BREAKERS CLEARLY LABELED?

B VISUALLY INSPECT THE PANEL "CP" THAT POWERS POS

YES NO N/A

1. IS AN **EQUIPMENT GROUND BAR** INSTALLED SUCH THAT IT IS ELECTRICALLY **CONNECTED** TO THE PANEL?
2. IS AN **ISOLATED GROUND BAR** INSTALLED SUCH THAT IT IS ELECTRICALLY **INSULATED** FROM THE PANEL?
3. DO ALL NEUTRAL CONDUCTORS TERMINATE ONLY TO THE NEUTRAL BAR?
4. DO ALL EQUIPMENT GROUND CONDUCTORS TERMINATE ONLY TO THE EQUIPMENT GROUND BAR?
5. DO ALL ISOLATED GROUND CONDUCTORS (GREEN W/YELLOW STRIPE) TERMINATE ONLY TO THE ISOLATED GROUND BAR?
6. ARE ALL ELECTRICAL CONNECTIONS (WIRING & BUSING) PROPERLY TIGHTENED?
7. ARE ALL POS AND COD CIRCUIT BREAKERS ON THE SAME PANEL?
8. ARE ALL CIRCUIT BREAKERS CLEARLY LABELED?
9. DO ALL POS & COD CIRCUIT BREAKERS HAVE A LOCKING MECHANISM ON THEIR HANDLES TO PREVENT THEM FROM BEING SHUT OFF BY MISTAKE?
10. DOES THE FEEDER CIRCUIT FOR THIS SUBPANEL CONTAIN PHASE, NEUTRAL ONE EQUIPMENT GROUND AND ONE ISOLATED GROUND CONDUCTORS THAT ARE PROPERLY TERMINATED (SEE POS & COD ISO GND/DED CKT DETAIL)?

VISUALLY INSPECT ALL REMAINING ELECTRICAL SUBPANELS

YES NO N/A

1. IS AN **EQUIPMENT GROUND BAR** INSTALLED SUCH THAT IT IS ELECTRICALLY **CONNECTED** TO THE PANEL?
2. DO ALL NEUTRAL CONDUCTORS TERMINATE ONLY TO THE NEUTRAL BAR?
3. DO ALL EQUIPMENT GROUND CONDUCTORS TERMINATE ONLY TO THE EQUIPMENT GROUND BAR?
4. ARE ALL ELECTRICAL CONNECTIONS (WIRING & BUSING) PROPERLY TIGHTENED?
5. ARE ALL CIRCUIT BREAKERS CLEARLY LABELED?
6. DOES THE FEEDER CIRCUIT FOR THIS SUBPANEL CONTAIN PHASE, NEUTRAL AND ONE EQUIPMENT GROUND CONDUCTORS THAT ARE PROPERLY TERMINATED? (SEE BUILDING ELECTRICAL GROUNDING DETAIL)

C VISUALLY INSPECT THE POS BRANCH CIRCUITS

YES NO N/A

1. ARE THE POS BRANCH CIRCUITS ROUTED IN THEIR OWN CONDUIT BY THEMSELVES?
2. IF THE POS BRANCH CIRCUIT IS ROUTED ABOVE GRADE, IS IT IN A METALLIC CONDUIT?
3. DOES EACH POS BRANCH CIRCUIT CONTAIN: ONE PHASE (BLACK COLORED INSULATION) ONE NEUTRAL (WHITE COLORED INSULATION) ONE EQUIPMENT GROUND (GREEN COLORED INSULATION) ONE ISOLATED GROUND (GREEN W/YELLOW STRIPE COLORED INSULATION).
4. DO ALL POS BRANCH CIRCUITS TERMINATE AT EITHER AN IG4700, IG4710, IG5261, IG5262 RECEPTACLES OR ANY COMBINATION OF THESE?
5. ARE ALL ELECTRICAL TERMINATIONS TO IG RECEPTACLES MADE WITH SOLID #12 AWG WIRE CAPTURED AROUND THE SCREW BARREL AND SUITABLY TIGHTENED?
6. ARE ALL BRANCH CIRCUIT CONNECTIONS PROPERLY TIGHTENED?
7. ARE THE CORRECT AMOUNT AND TYPE OF IG RECEPTACLES PROVIDED AS SHOWN IN THE ELECTRICAL ROUGH-IN PLAN, NOTES AND INFORMATION?
8. DO ALL POS RECEPTACLES HAVE ORANGE "COMPUTER ONLY" COVERPLATES?
9. DO ALL POS BRANCH CIRCUITS COMPLY WITH THE "POS & COD ISOLATED GROUND/DEDICATED CIRCUIT" DETAIL?

D VISUALLY INSPECT THE POS BRANCH CIRCUIT FOR THE COD

YES NO N/A

1. ARE THE COD BRANCH CIRCUITS ROUTED IN THEIR OWN CONDUIT BY THEMSELVES?
2. DOES EACH COD BRANCH CIRCUIT CONTAIN;
   - ONE PHASE (BLACK COLORED INSULATION),
   - ONE NEUTRAL (WHITE COLORED INSULATION),
   - ONE EQUIPMENT GROUND (GREEN COLORED INSULATION),
   - ONE ISOLATED GROUND (GREEN W/YELLOW STRIPE COLORED INSULATION).
3. IS THE COD POWERED FROM THE SAME PANEL AS THE POS?
4. DOES THE BREAKER FOR THE COD HAVE A LOCKING MECHANISM ON ITS HANDLE THAT WILL PREVENT IT FROM BEING SHUT OFF?
5. DO THE COD BRANCH CIRCUIT(S) COMPLY WITH THE "POS & COD ISOLATED GROUND/DEDICATED CIRCUIT" DETAIL?
6. IF THE COD HAS AN OPTICAL ISOLATOR, IS A STRAIGHT BLADE ISOLATED GROUND RECEPTACLE ON AN ISOLATE GROUND/DEDICATED CIRCUIT PROVIDED FOR IT?

IF YOU HAVE ANY QUESTIONS REGARDING THE PLANS, PLEASE CALL THE DESIGNER.

DESIGNER: Wendy Wenborg
PHONE: 952-540-4047
EMAIL: wwenborg@epinc.com

REV	DATE	DESCRIPTION	BY
-	01/23/20	PERMIT SET	WLW
-	01/13/20	USRD PROGRESS SET REVIEW	WLW

emanuelson-podas consulting engineers
Emanuelson-Podas, Inc.
7205 Bush Lake Road
Edina, MN 55439
(952) 930-0050 | www.epinc.com
3801.0037

MICHAEL WEBERT LICENSED 17648 KANSAS PROFESSIONAL ENGINEER

01/23/20

PREPARED BY:

PREPARED FOR: McDonald's USA, LLC

© 2020 McDonald's USA, LLC
These drawings and specifications are the confidential and proprietary property of McDonald's USA, LLC and shall not be copied or reproduced without written authorization. The contract documents were prepared for use on this specific site in conjunction with its issue date and are fitted to that site and jurisdiction. Any other use or reuse of these drawings for reference or example on another project requires the services of properly licensed architects and engineers. Reproduction of the contract documents for reuse on another project is not authorized.

DRAWN BY	STD ISSUE DATE	REVIEWED BY	DATE ISSUED
MRV	2019_11	WLW	01-23-20

TITLE: 2019 STANDARD BUILDING – BB20 4597F10-WOOD/WOOD

DESCRIPTION: WOOD BEARING WALLS W/FIBER CEMENT SIDING & CI WOOD ROOF TRUSS FRAMING FIBER CEMENT PANEL/BATTEN/ALPOLIC PANEL/BRICK EXT. FINISH

SITE ID: 015-0071 | SITE ADDRESS: 605 SOUTH 7TH STREET, KANSAS CITY, KS

RO#19175

SHEET NO. 015-0071.00.0 E1.0

POS RISER DIAGRAM

TRASH CORRAL POWER:

3/4"C–4#10 & 1#10 GND TO A 30A–2P AND A 20A–1P CB IN PANEL AP–2 FOR TRASH COMPACTOR AND WP GFCI DCO. PROVIDE 30A–2P NF DISCONNECT FOR TRASH COMPACTOR. VERIFY EXACT LOCATION AND ALL REQUIREMENTS OF TRASH CORRAL IN FIELD.

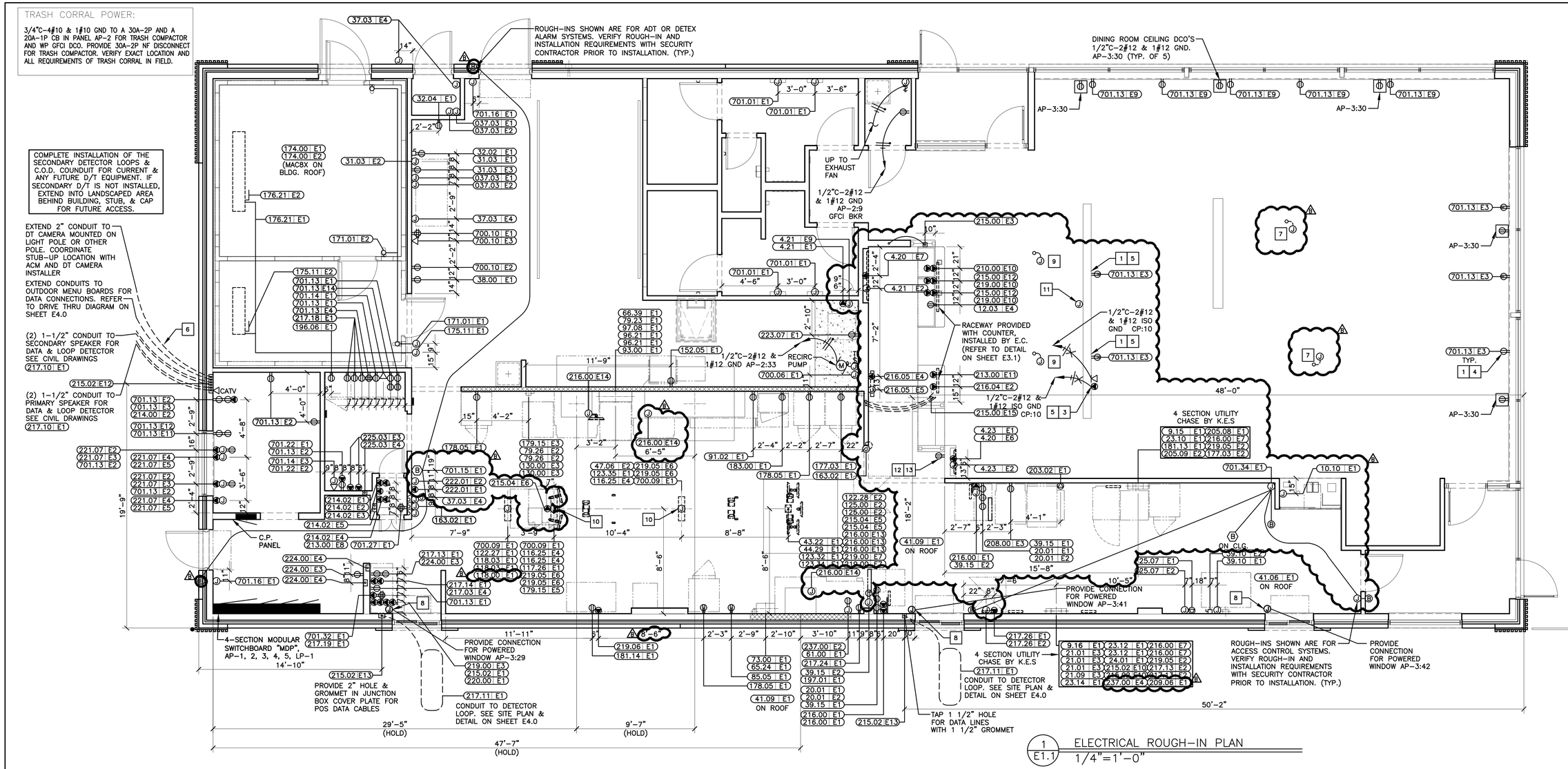

1 / E1.1 ELECTRICAL ROUGH–IN PLAN
1/4"=1'–0"

SYMBOLS AND ABBREVIATIONS

SYMBOL	DESCRIPTION	SYMBOL	DESCRIPTION
$	SINGLE POLE SWITCH, 3W=THREE WAY SWITCH, K=KEYED SWITCHED, VS=VACANCY SENSOR	(B)	BUZZER
$T	MANUAL SWITCH (T=THERMAL OVERLOADS)	(B)	BUTTON FOR BUZZER
[T]	TRANSFORMER	[o o]	PULLBOX
	JB WITH DUPLEX CONVENIENCE OUTLET (FLUSH WITH CEILING)		PANELBOARD
	JB WITH SINGLE CONVENIENCE OUTLET		CIRCUIT BREAKER
	JB WITH DUPLEX CONVENIENCE OUTLET	A	AMPERES
	JB WITH TWO DUPLEX CONVENIENCE OUTLETS	ACM	AREA CONSTRUCTION MANAGER
	JB WITH SPECIAL PURPOSE OUTLET	AFF	ABOVE FINISHED FLOOR
	JB WITH ISOLATED GROUND OUTLET =IG4700A, =IG5262 = IG4710, =IG5261,	C	CONDUIT
		CCT	CIRCUIT
	INTERCOM STATION W/ 3/4"C– TO MAIN STATION	EC	ELECTRICAL CONTRACTOR
	TELEPHONE JACK	GC	GENERAL CONTRACTOR
(J)	JUNCTION BOX – WALL OR CEILING MOUNTED	GFI/GFCI	GROUND FAULT CIRCUIT INTERRUPTER
	DISCONNECT SWITCH	GND	GROUND
(S)	STUB UP THRU ROOF	IG	ISOLATED GROUND
(T)	THERMOSTAT SENSOR W/ 1/2"C– UP TO CEILING SPACE	JB	JUNCTION BOX
(M)	MOTOR CONNECTION	KES	KITCHEN EQUIPMENT SUPPLIER
	CONDUIT RUN CONCEALED IN CEILING OR WALLS	MLO	MAIN LUGS ONLY
	CONDUIT RUN IN FLOOR SLAB	WP	WEATHERPROOF
	HOT (SHORT), NEUTRAL (LONG), EQUIP GRD (LONG WITH DOT), & 'X' DENOTES ISOLATED GRD	(CO)	CARBON MONOXIDE SENSOR
	J–BOX WITH FINAL EQUIPMENT CONNECTION		
(OS)	CEILING MOUNTED OCCUPANCY SENSOR		

ADT ROUGH–IN NOTES

1. COORDINATE EXACT INSTALLATION REQUIREMENTS WITH ADT PRIOR TO INSTALLATION TEL. 800–417–8238
2. EC SHALL PROVIDE A 2 GANG 3 25/32" X 3 25/32" X 3 1/2"D JUNCTION BOX AT DOOR FOR INSTALLATION OF DOOR ALARM UNIT. STUB 1/2"C ABOVE CEILING FROM JUNCTION BOX. PROVIDE 1/2"C FROM J–BOX TO DOOR MAGNETIC SWITCH LOCATION.
3. EC SHALL PROVIDE 4" X 4" JUNCTION BOX ABOVE CEILING FOR INSTALLATION OF LOW VOLTAGE TRANSFORMER. VERIFY EXACT LOCATION WITH ADT PRIOR TO INSTALLATION. PROVIDE 1/2"C–2#12 TO LOCKOUT TYPE CB IN PANEL LP–1.

GENERAL NOTES

1. SEE SHEET E3.0 FOR PANEL & CIRCUIT BREAKER ASSIGNMENT, VOLT/PH, FLA, BREAKER SIZE, COND/WIRE, RECEPTACLE TYPE, HEIGHT ABOVE FINISHED FLOOR, REQUIREMENTS & REMARKS FOR ALL ELECTRICAL EQUIPMENT.
2. SEE LOW VOLTAGE CABLE MANAGEMENT SPECIFICATION ON SHEET E1.0 FOR POS, DATA, AND SOUND SYSTEM REQUIREMENTS.
3. GC/EC SHALL COORDINATE LOCATION AND ALL REQUIREMENTS OF CT& METER CABINET WITH LOCAL UTILITY COMPANY. CT & METER CABINET SHALL NOT BE INSTALLED ON D/T SIDE OF BUILDING. GC SHALL PAINT TO MATCH BUILDING COLOR.

KEY NOTES

1. TAMPER RESISTANT GFCI DUPLEX RECEPTACLE IN PUBLIC AREAS. EC SHALL PROVIDE HUBBELL GFTRST* ("*": AL=ALMOND, BK=BLACK, –=BROWN, GY=GRAY, I=IVORY, LA=LIGHT ALMOND, R=RED, W=WHITE). SPECIFIED RECEPTACLE BECOMES DE–ENERGIZED UPON FAILURE OF GFCI DEVICE. NO SUBSTITUTIONS.(TYPICAL)
2. SEE POS ELECTRICAL RISER DIAGRAM ON SHEET E1.0. (TYPICAL)
3. SEE NOTE FLAT PANEL TELEVISION NOTE ON SHEET E3.1.
4. PER THE AMERICAN WITH DISABILITIES ACT ACCESSIBILITY GUIDELINES (ADAAG), A MINIMUM OF ONE (1) ADA COMPLIANT ELECTRICAL RECEPTACLE SHALL BE INSTALLED AT AN ACCESSIBLE TABLE. GC/EC SHALL REFERENCE FINAL DECOR PLANS AND PROVIDE RECEPTACLES AS NECESSARY FOR COMPLIANCE. (TYPICAL)
5. COORDINATE LOCATION OF RECEPTACLES SO THAT RECEPTACLES ARE LOCATED ON FULL HEIGHT WALLS PER THE DECOR PLAN. STUB UP AND CIRCUIT IN HALF WALL FOR RECEPTACLES NOT ON FULL HEIGHT WALLS, CONFIRM FINAL LOCATIONS WITH DECOR DRAWINGS PRIOR TO ROUGH–IN.
6. IF MOUNTED TO A LIGHTING POLE, DT CAMERA SHALL ONLY BE INSTALLED ON A POLE WITH MAXIMUM OF (2) LIGHTING HEADS. PROVIDE ISOLATION OF DT CAMERA MOUNTING HARDWARE AND POLE TO PREVENT BI–METALLIC OR GALVANIC CORROSION.
7. E.C. TO PROVIDE AN ALLOWANCE IN BID TO PROVIDE TWO(2) FLEXIBLE POWER CONNECTIONS FOR POWER TO FURNITURE/ FAMILY EXPERIENCE ELEMENTS AS PART OF THE DECOR PACKAGE. E.C. SHALL VERIFY EXACT LOCATIONS IN FIELD AND WITH DECOR DRAWINGS. PROVIDE ALL NECESSARY MATERIALS AND LABOR FOR A COMPLETE AND FULLY NEC CODE COMPLIANT INSTALLATION. ALL COMPONENTS SHALL BE FED FROM A GFCI TYPE CIRCUIT BREAKER AND BRANCH CIRCUIT SHALL CONTAIN TWO PATHS OF GROUNDING (CONDUIT BODY AND AN INSULATED GROUNDING CONDUCTOR) TO COMPLY WITH McDONALD'S GROUNDING STANDARDS.
8. DRIVE THRU WINDOW POWER, CONFIRM REQUIREMENTS WITH MANUFACTURER DRAWINGS.
9. PROVIDE POWER WITHIN CEILING FOR CONNECTION TO SELF ORDER KIOSKS. COORDINATE EXACT LOCATION OF KIOSKS WITH DECOR DRAWINGS. PROVIDE 2#12, 1#12 GRD., & 1#12 ISOLATED GROUND ON A 20A DEDICATED CIRCUIT FED FROM THE CP PANEL FOR EVERY ONE (1) DOUBLE SIDED OR TWO (2) SINGLE SIDED KIOSKS.
10. VERIFY DROP CORDS AND RECEPTACLES DO NOT FALL BELOW HEIGHTS LISTED ON E3.0 ELECTRICAL SCHEDULE. RECEPTACLES SHOULD BE LOCATED AT HEIGHTS TO AVOID CONTACT WITH HOT APPLIANCES.
11. PROVIDE J–BOX ABOVE CEILING NEAR KIOSK FOR FUTURE DIGITAL MERCHANDISER. EXTEND CIRCUIT TO THIS LOCATION FROM DIGITAL MERCHANDISER NEAR SERVICE AREA. EXTEND J–HOOKS FROM SERVICE AREA FOR FUTURE DATA CABLES.
12. CONTRACTOR TO PUNCH HOLES IN SERVICE POD FOR CABLE AND CONDUIT ROUTING. UTILIZE BUSHINGS PROVIDE WITH SERVICE POD TO PROTECT CABLES
13. PROVIDE A 5–20R RECEPTACLE FOR DELIVERY POD DOWNLIGHT, F12DP. INSTALL RECEPTACLE AT 7'–6" AFF. PROVIDE 2#12, 1#12GRD IN 1/2"C TO A 20A CIRCUIT FROM THE LP PANEL. REFER TO LIGHTING PLAN FOR CIRCUIT NUMBER.

REV	DATE	DESCRIPTION	BY
4	12/03/20	SERVICE AREA OPTIMIZATION	WLW
3	11/13/20	USRD SAO SET REVIEW	WLW
2	05/05/20	CIVIL & PLAN REVIEW COMMENTS	WLW
1	01/23/20	PERMIT SET	WLW
	01/13/20	USRD PROGRESS SET REVIEW	WLW

emanuelson-podas consulting engineers
Emanuelson-Podas, Inc.
7705 Bush Lake Road
Edina, MN 55439-2042
(952) 930-0050 | www.epinc.com
3801.0037

MATTHEW W. LAUX LICENSED 17667 KANSAS PROFESSIONAL ENGINEER
12/03/20

PREPARED BY:

PREPARED FOR: McDonald's USA, LLC

©2020 McDonald's USA, LLC
These drawings and specifications are the confidential and proprietary property of McDonald's USA, LLC, and shall not be copied or reproduced without written authorization. The contract documents were prepared for use on this specific site in conjunction with its issue date and are not suitable for use on any other project. Any modifications to these drawings for reference or example on another project requires the services of properly licensed architects and engineers. Reproduction of the contract documents for use on another project is not authorized.

DRAWN BY	STD ISSUE DATE
MRL	2019_11
REVIEWED BY	DATE ISSUED
WLW	01–23–20

TITLE: 2019 STANDARD BUILDING – BB20 4597F10–WOOD/WOOD

DESCRIPTION	SITE ADDRESS
WOOD BEARING WALLS W/FIBER CEMENT SIDING & CI WOOD ROOF TRUSS FRAMING FIBER CEMENT PANEL/DATTEN/ALPOLIC PANEL/BRICK EXT. FINISH	605 SOUTH 7TH STREET, KANSAS CITY, KS

SITE ID	RQ#
015–0071	19175

SHEET NO. 015–0071.00.B
E1.1
ROUGH–IN PLAN

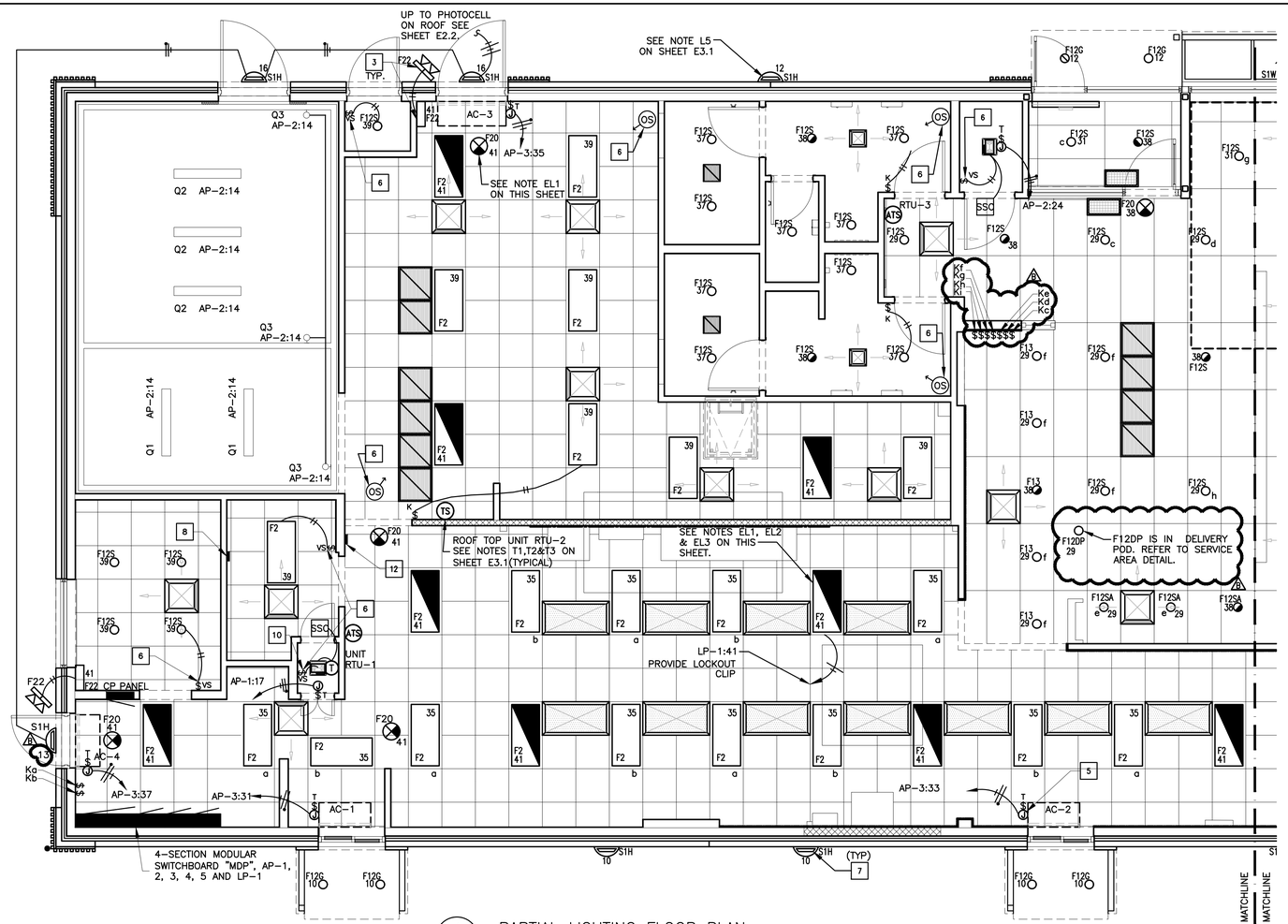

1 E2.0 PARTIAL LIGHTING FLOOR PLAN
1/4"=1'-0"

KEY NOTES

1. CENTER PENDANT LIGHTS OVER TABLES (TYPICAL)
2. ALL SOFFIT LOCATIONS, LIGHTING, & SUPPLY GRILLS SHALL BE COORDINATED WITH DECOR COMPANY DRAWING PRIOR TO INSTALLATION.
3. EC SHALL INSTALL AND CONFIGURE REMOTE EMERGENCY LIGHTING AT ALL EGRESS EXTERIOR DOORS FOR MAXIMUM ILLUMINATION AT POINTS OF EGRESS. INSTALL WP J-BOX WITHIN SOFFIT TO ALLOW A FLUSH INSTALLATION OF ANY EXTERIOR EMERGENCY EGRESS LIGHTING (TYPICAL).
4. OPTIONAL ADJUSTABLE WALL WASH FIXTURE TO ILLUMINATE LOGO OR GRAPHICS. EC SHALL VERIFY EXACT LOCATION SO AS TO ADEQUATELY ILLUMINATE McDONALD'S ARCH LOGO SIGN AND GRAPHICS.
5. AIR CURTAIN UNIT. NON HEATED VERSION TO USE 1/2"C. 2#12, 1#12GRD. HEATED VERSION TO USE 1"C. 2#6, 1#10 GRD. (TYPICAL).
6. PROVIDE DUAL TECHNOLOGY OCCUPANCY SENSOR OR VACANCY SENSOR SWITCH AS SHOWN. ORDER ALL SENSORS FROM; SECURITY LIGHTING SYSTEMS, INC.
7. RADIAL WALL SCONCE. SEE NOTE L2 ON SHEET E3.1 AND ARCHITECTURAL ELEVATIONS ON SHEETS A2.0 & A2.1. (TYPICAL)
8. BUILDING AUTOMATION SYSTEM LOCATION. SEE LIGHTING CONTROL DETAILS ON SHEET E4.1.
9. PROVIDE DUAL-LITE LIGHTING INVERTER MODEL #LG125T FOR USE WITH TYPE F12S, F12SA & F12G FIXTURES SHOWN SHADED OR SLASHED. E.C. SHALL FIELD VERIFY EXACT QUANTITY AND LOCATION OF DEVICE PRIOR TO INSTALLATION. E.C. SHALL VERIFY QUANTITY OF FIXTURES THAT CAN BE CONNECTED TO INVERTER WITHOUT EXCEEDING OPERATING CAPACITY OF UNIT AND PROVIDE ADDITIONAL CIRCUITS AND INVERTERS AS REQUIRED. (TYPICAL)
10. CENTER VACANCY SENSOR SWITCH OPPOSITE COMPUTER RACK IN A LOCATION ACCESSIBLE FROM BOTH DOORS FOR CONTROL OF CEILING MOUNTED LIGHT, IN DATA ROOM. FAN CONTROLLED BY LOCAL THERMOSTAT.
11. PROVIDE POWER FOR LIGHT WITHIN TOY DISPLAY. COORDINATE EXACT LOCATION WITH DECOR DRAWINGS.
12. LIGHTING CONTACTORS IN NEMA 1 ENCLOSURE JUST BELOW CEILING. EC SHALL PROVIDE 120 VOLT CONTROL CIRCUIT TO CONTACTOR PANEL. VERIFY EXACT LOCATION IN FIELD AND REFER TO DRAWING E4.1 FOR ADDITIONAL DETAILS.

EMERGENCY LIGHTING NOTES

EL1. EC SHALL INSTALL A LOCK ON CIRCUIT BREAKER HANDLE, FOR ALL EMERGENCY LIGHTING CIRCUITS. EC SHALL VERIFY ALL REQUIREMENTS AND FINAL EMERGENCY LIGHTING LOCATIONS WITH LOCAL AUTHORITIES. INCLUDE ALL COSTS IN BASE BID.

EL2. IF NOT INSTALLED BY MANUFACTURER, EC SHALL BE RESPONSIBLE FOR THE COMPLETE INSTALLATION OF THE EMERGENCY INVERTER BALLAST IN NIGHT LIGHTING FIXTURES SHOWN ON THIS SHEET.

EL3. LED FIXTURES DENOTED AS NIGHT LIGHTING OR SWITCHED EMERGENCY SHALL BE APPROVED WITH DUAL LITE LIGHTING INVERTER MODEL # LG125T. INVERTER SHALL BE CAPABLE OF ILLUMINATING FIXTURE FOR 1.5 HOURS TO COMPLY WITH NEC SECTION 700 AND UL924. E.C. SHALL NOT INSTALL MORE THEN EIGHT FIXTURES TO EACH INVERTER. PROVIDE ADDITIONAL INVERTERS AS NECESSARY.

EL4. EMERGENCY BATTERY LIGHTING WALL PACKS IN PLAYPLACE SHALL BE LOCATED SO AS TO PROVIDE FOR MAXIMUM ILLUMINATION OF AREA. EC SHALL VERIFY EXACT PLACEMENT IN THE FIELD WITH McDONALD'S ACM. (IF APPLICABLE)

EL5. EMERGENCY LIGHTING HAS BEEN DESIGNED PER NFPA 101 TO MAINTAIN 1 FC IN PATH OF EGRESS. IF FIELD CONDITIONS REQUIRE ANY CHANGES TO LIGHTING DESIGN, EMERGENCY LIGHTING, SHALL BE INSTALLED TO MEET THE ABOVE REQUIREMENTS.

KEY

DENOTES FIXTURE TYPE — F2
DENOTES CIRCUIT NUMBER — 41

LIGHTING FIXTURES SHOWN HALF SHADED SHALL BE WIRED TO AN EMERGENCY INVERTER AND CIRCUITED AS A NIGHT LIGHT. SEE NOTE EL3 ON THIS SHEET. COORDINATE LOCATION WITH DECOR.

DENOTES FIXTURE TYPE — F2
DENOTES CIRCUIT NUMBER — 41

LIGHTING FIXTURES SHOWN WITH A SLASH SHALL BE WIRED TO AN EMERGENCY INVERTER AND CIRCUITED AS SWITCHED EMERGENCY FIXTURES SO THE FIXTURE IS CONTROLLED VIA TIMECLOCK BUT TURNS ON UPON LOSS OF POWER. SEE NOTE EL3 ON THIS SHEET. COORDINATE LOCATION WITH DECOR.

TRASH CORRAL LIGHTING:

1/2"C-2#12 & 1#12 GND TO LP-1:7. VERIFY EXACT LOCATION AND ALL REQUIREMENTS OF TRASH CORRAL IN FIELD.

SEE SHEET E3.1 FOR GENERAL LIGHTING NOTES AND "ROOF PLAN" (SHEET E2.1) FOR ADDITIONAL ELECTRICAL ROUGH-IN & LIGHTING REQUIREMENTS.

DAYLIGHTING NOTES:

PROVIDE PHOTOCELL PARAGON #LB201-00.

PROVIDE PHOTOCELL TO CONTROL ONLY LUMINAIRES IN EACH DAYLIGHT AREA AND CONTROL AT LEAST 50% OF LAMPS PER COMM 63.0505(2)(a)2.

McDONALD'S SITE SIGNAGE:

EC SHALL PROVIDE:

ELECTRICAL CONTRACTOR SHALL COORDINATE POWER REQUIRED FOR ROAD SIGN. MOST SIGNS REQUIRE (1) 20 AMP 120V CIRCUIT. IF USED A 90-200 SIGN REQUIRES (4) 20 AMP 120V CIRCUITS OR ONE 3-PHASE 60 AMP 120/208V CIRCUIT. COORDINATE WITH SUPPLIERS DRAWINGS.
(1) 20 AMP 208 VOLT CIRCUIT, EC TO WIRE 2#12 TO 208 VOLT FLAG FLOODLIGHTS.
(1) 20 AMP 120 VOLT CIRCUIT TO D.C.O. IN ROAD SIGN BASE IF REQUIRED.
(2) 20 AMP 120 VOLT CIRCUITS FOR INGRESS/EGRESS DIRECTIONAL SIGNS (IF APPLICABLE).

*VERIFY EXACT LOCATIONS/TYPES/QUANTITIES OF ALL THE ABOVE WITH SITE/CIVIL PLANS AND MCD ACM.

LIGHTING FIXTURE SCHEDULE:

MARK	SYMBOL	DESCRIPTION	DIFFUSER	LAMPS WATTS	LAMPS TYPE	BALLAST	MOUNTING	MANUFACTURER AND CATALOG NUMBER
F2		2' X 4' GRID TROFFER	PRISMATIC ACRYLIC	44W	LED	–	RECESSED	SECURITY LIGHTING: # LCAT24-35HLG-EDU-WP-GK
F12DP		4" LED DOWN LIGHT – GOLD TRIM – DELIVERY POD	–	9W	LED	–	RECESSED	SECURITY LIGHTING #LB4A-6LDDM-30K-9-GD/IBX4QL-120
F12G		6" LED DOWN LIGHT – SHALLOW HOUSING	–	12W	LED	–	RECESSED	SECURITY LIGHTING # LB6LEDA10L-50K-9-GD/RMNICS-QL
F12S		6" LED DOWN LIGHT	–	12W	LED	–	RECESSED	SECURITY LIGHTING # LB6LEDA10L-30K-9-SA/DBXQL-DM COORDINATE DOWN LIGHT TO BE USED IN DINING WITH PHOTOMETRIC
F12SA		6" LED ADJUSTABLE DOWN LIGHT	–	12W	LED	–	RECESSED	SECURITY LIGHTING # LB6LEDA10L-30K-9-WW-SA/DBXQL-DM COORDINATE DOWN LIGHT TO BE USED IN DINING WITH PHOTOMETRIC
F13		4" LED DOWN LIGHT	–	25W	LED	–	RECESSED	SECURITY LIGHTING # LF4SL-4LFSL20L-30K-SP-SL-DL-B24
F14		ALPHABET PENDANT	–	(1)-8W	LED	–	PENDANT	SECURITY LIGHTING # MS-P-A-BM-10BLED-CBC (TO BE VERIFIED WITH DECOR DRAWINGS)
F20		EXIT SIGN WITH BATTERY BACKUP	–	1.8W	LED	–	SURFACE	SECURITY LIGHTING: EVEURWE. SEE NOTE LS2 ON THIS SHEET.
F21		2 HEADED EMERGENCY BATTERY LIGHT	–	–	LED	–	SURFACE TO WALL OR CEILING	SECURITY LTG. #EV4D
F22		EMERG BATTERY & 2 REMOTE HEADS	–	–	LED	–	SURFACE TO WALL OR SOFFIT	SECURITY LTG. #EV4D-02L-0/EVODB
F23		2 HEADED EMERG LIGHT & 2 REMOTE HEAD IF REQ'D	–	–	LED	–	SURFACE TO WALL OR SOFFIT	SECURITY LTG. #EV4D/EVODB
Q1		REFRIGERATION LIGHTING	INTERNAL PRISMATIC LENS VAPOR TIGHT	81.1W	LED	–	SURFACE FREEZER/ COOLER	METALUX 4VT2-LD4-8-DR-UNV-L835-CD1-WL-U
Q2		REFRIGERATION LIGHTING	INTERNAL PRISMATIC LENS VAPOR TIGHT	38W	LED	–	SURFACE FREEZER/COOLER	METALUX 4VT2-LD4-4-DR-UNV-L835-CD1-WL-U
Q3		REFRIGERATION LIGHTING	VAPOR PROOF	1-100	A16	–	SURFACE TO WALL FREEZER AND COOLER	KASON REFRIGERATION LIGHTING: 1802000002, WITH WIRE GUARD.
S1H		"DOWN ONLY" RADIAL WALL SCONCE – SILVER	TEMPERED GLASS	(1)-14W	LED	–	SURFACE TO WALL	SECURITY LIGHTING: #RWSC-36L-5K-DO-U-PS
S1W		"DOWN ONLY" RADIAL WALL SCONCE – WHITE	TEMPERED GLASS	(1)-14W	LED	–	SURFACE TO WALL	SECURITY LIGHTING: #RWSC-36L-5K-DO-U-WH

LIGHTING SCHEDULE NOTES:

LS1. ORDER LED EXIT SIGNS WITH LETTER COLORS THAT COMPLY WITH LOCAL CODES.
– FOR RED LETTERS USE #EVE-U-R (UNIVERSAL),
– FOR GREEN LETTERS USE #EVE-U-G (UNIVERSAL), OR
IF THE ABOVE EXIT SIGNS DO NOT COMPLY WITH LOCAL CODES USE: LED SIGN WITH BATTERY BACKUP, LETTER SIZE, COLOR, TYPE & DIRECTIONAL ARROWS AS REQUIRED BY THE LOCAL AUTHORITIES.

LS2. ALL INTERIOR LIGHT FIXTURES SHALL BE 120 VOLT UNLESS NOTED OTHERWISE.

LS3. LIGHTING FIXTURES HAVE BEEN CHOSEN TO ACHIEVE MAXIMUM ENERGY CONSERVATION WHILE MAINTAINING ADEQUATE LEVEL OF ILLUMINATION. SPECIFICATIONS SHALL BE STRICTLY FOLLOWED. ANY DEVIATION FROM THE SPECIFICATIONS SHALL BE APPROVED IN WRITING BY McDONALD'S CORPORATION.

LS4. VERIFY DOWNLIGHT TO BE USED IN DINING WITH PHOTOMETRIC

ORDER ALL LIGHT FIXTURES FROM:

SECURITY LIGHTING SYSTEMS, INC.
PHONE: 1-800-LIGHT-IT
EMAIL: QUOTATIONS@SECURITYLIGHTING.COM

CS ILLUMINATIONS
PHONE: 760-477-1244
EMAILS: MCD@CSILLUMINATIOINS.COM
WWW.CSILLUMINATIONS.COM/MCD

REV	DATE	DESCRIPTION	BY
-	-	-	-
-	-	-	-
-	-	-	-
A	12/03/20	SERVICE AREA OPTIMIZATION	WLW
-	11/13/20	USRD SAO SET REVIEW	WLW
A	05/05/20	CIVIL & PLAN REVIEW COMMENTS	WLW
-	01/23/20	PERMIT SET	WLW
-	01/13/20	USRD PROGRESS SET REVIEW	WLW

emanuelson-podas consulting engineers
Emanuelson-Podas, Inc.
705 Bush Lake Road
Eden Prairie, MN 55347
(952) 930-0050 | www.epinc.com

3801.0037

MATTHEW W. LILLY LICENSED 17667 KANSAS PROFESSIONAL ENGINEER

12/03/20

PREPARED BY:

PREPARED FOR: McDonald's USA, LLC

©2020 McDonald's USA, LLC
These drawings and specifications are the confidential and proprietary property of McDonald's USA, LLC and shall not be copied or reproduced without written authorization. The contract documents were prepared for use on this specific site in conjunction with its issue date and are intended for a single use. Any other use, including the reproduction of these drawings for reference or example on another project requires the services of properly licensed architects and engineers. Reproduction of the contract documents for reuse on another project is not authorized.

DRAWN BY: MRL
STD ISSUE DATE: 2019_11
REVIEWED BY: WLW
DATE ISSUED: 01-23-20
RQ#19175

TITLE: 2019 STANDARD BUILDING – BB20 4597T10-WOOD/WOOD

DESCRIPTION	
WOOD BEARING WALLS W/FIBER CEMENT SIDING & CI	
WOOD ROOF TRUSS FRAMING	
FIBER CEMENT PANEL/BATTEN/ALPOLIC PANEL/BRICK EXT. FINISH	
SITE ID	SITE ADDRESS
015-0071	605 SOUTH 7TH STREET, KANSAS CITY, KS

SHEET NO. 015-0071.00.B
E2.0
LIGHTING PLAN

PB = Pullbox
JB = Junction Box
EC = Electrical Contractor
VIF = Verify in Field

ELECTRICAL SCHEDULE

TAG #	QTY	DESCRIPTION	VOLT/PH	FLA	BRK SIZE	COND/WIRE	PNL/CCT	RECEP TYPE	HGT AFF	REQUIREMENTS & REMARKS
701.13E9	5	DCO – GENERAL PURPOSE	120/1	1.5	20A	1/2"C–2#12	AP–2:42	5–20R	1'–6"	–
701.14E1	1	TELEPHONE	PHONE BOX	–	–	–	–	RJ–11C JACK	4'–6"	–
701.14E3	1	TELEPHONE	PHONE BOX	–	–	–	–	RJ–11C JACK	3'–6"	–
701.15E1	1	DOOR BUZZER	120/1	.5	20A	1/2"C–2#12	LP–1:16	–	8'–0"	CONNECT TRANSFORMER TO POWER & ROUTE LOW VOLTAGE WIRES OVERHEAD TO DOOR BUTTON
701.16E1	2	DOOR ALARM	120/1	.5	20A	1/2"C–2#12	LP–1:16	JB	SEE RMKS	JUNCTION BOX ABOVE CEILING, PROVIDE LOCKOUT ON CIRCUIT BREAKER HANDLE.
701.22E1	1	WAYPORT – WIRELESS INTERNET SERVER	120/1 ISOLATED	1.5	20A	1/2"C–2#12IG	CP:2	IG5262	8'–0"	–
701.22E2	1	WAYPORT – WIRELESS INTERNET SERVER	DATA CABLE	–	–	–	–	JB	8'–0"	EXTEND 1" CONDUIT ABOVE CLG. W/BUSHING FOR DATA CABLE
701.27E1	1	DCO–SATELLITE MUSIC SYSTEM	120/1	1.0	20A	1/2"C–2#12	AP–3:6	(2) 5–20R	3'–0"	PROVIDE DOUBLE DUPLEX WALL PLATE
701.32E1	1	REMOTE ORDER TAKER BATTERY PACK	120/1	2.0	20A	1/2"C–2#12	AP–1:9	(2) 5–20R	4'–6"	PROVIDE DOUBLE DUPLEX WALL PLATE. FIELD VERIFY HEIGHT AND LOCATION WITH ACM
701.34E1	1	ACCESS CONTROL PANEL	120/1	2.0	20A	1/2"C–2#12	LP–1:16	JB	8'–0"	ROUTE LOW VOLTAGE WIRES TO DOOR BUTTON, HORN AND DOOR STRIKE AS REQUIRED

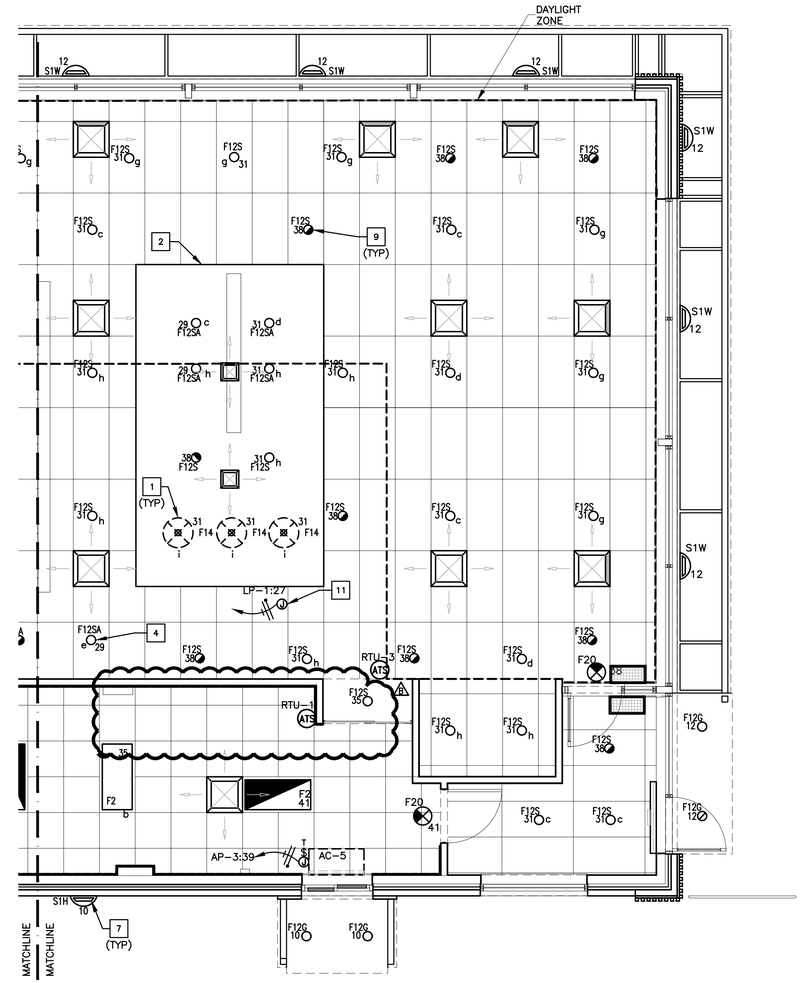

1 E2.1 PARTIAL LIGHTING FLOOR PLAN
1/4"=1'–0"

REFER TO E2.0 FOR NOTES. SEE SHEET E3.1 FOR GENERAL LIGHTING NOTES AND "ROOF PLAN" (SHEET E2.2) FOR ADDITIONAL ELECTRICAL ROUGH–IN & LIGHTING REQUIREMENTS.

REV	DATE	DESCRIPTION	BY
-	-	-	-
-	-	-	-
A	12/03/20	SERVICE AREA OPTIMIZATION	WLW
-	11/13/20	USRD SAO SET REVIEW	WLW
A	05/05/20	CIVIL & PLAN REVIEW COMMENTS	WLW
-	01/23/20	PERMIT SET	WLW
-	01/13/20	USRD PROGRESS SET REVIEW	WLW

emanuelson-podas
consulting engineers
Emanuelson-Podas, Inc.
7705 Bush Lake Road
Edina, MN 55439
(952) 930-0050 | www.epinc.com

3801.0037

MATTHEW W. FALLS LICENSED 17667 KANSAS PROFESSIONAL ENGINEER

12/03/20

PREPARED BY:

PREPARED FOR: McDonald's USA, LLC

© 2020 McDonald's USA, LLC
These drawings and specifications are the confidential and proprietary property of McDonald's USA, LLC and shall not be copied or reproduced without written authorization. The contract documents were prepared for use on this specific site in conjunction with its issue date and are not suitable for use on other sites or in other jurisdictions. Reproduction of these drawings for reference or example on another project requires the services of properly licensed architects and engineers. Reproduction of the contract documents for reuse on another project is not authorized.

DRAWN BY: MRL
STD ISSUE DATE: 2019_11
REVIEWED BY: WLW
DATE ISSUED: 01–23–20
RQ#19175

TITLE: 2019 STANDARD BUILDING – BB20 4597F10–WOOD/WOOD

DESCRIPTION
WOOD BEARING WALLS W/FIBER CEMENT SIDING & CI
WOOD ROOF TRUSS FRAMING
FIBER CEMENT PANEL/BATTEN/ALPOLIC PANEL/BRICK EXT. FINISH

SITE ID: 015–0071
SITE ADDRESS: 605 SOUTH 7TH STREET, KANSAS CITY, KS

SHEET NO. 015–0071.00.B
E2.1
LIGHTING PLAN

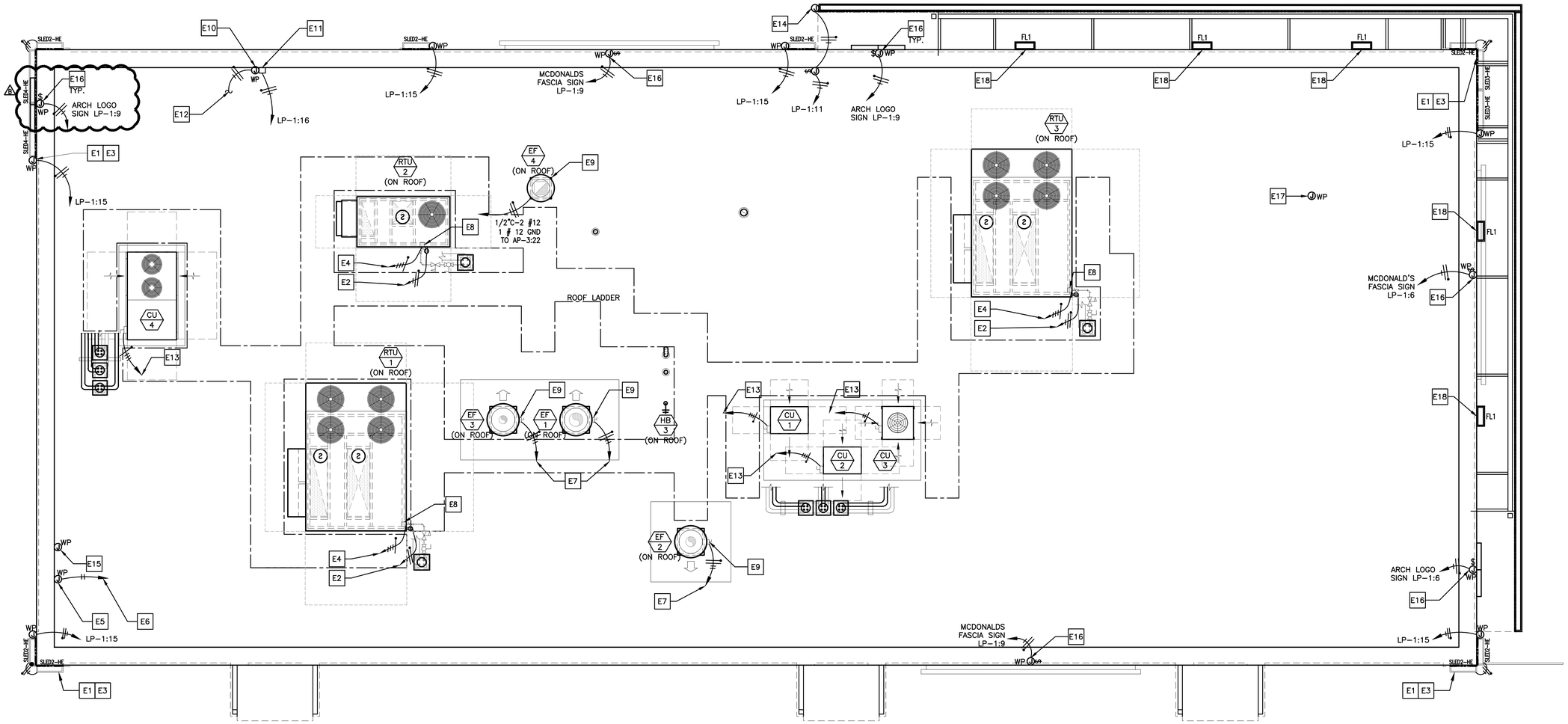

1 / E2.2 ROOF PLAN
1/4"=1'-0"

KEYED NOTES

- **E1** EVERY LINEAR RUN OF SLED FIXTURES REQUIRES A DEDICATED WHIP KIT PROVIDED WITH FIXTURE. CONTRACTOR TO FIELD VERIFY FIXTURE MOUNTING HEIGHT, LOCATION, QUANTITY, FIXTURE LENGTHS, AND ALL ELECTRICAL CONNECTION REQUIREMENTS WITH SECURITY LIGHTING PRIOR TO ORDERING AND INSTALLATION (TYPICAL).
- **E2** WEATHER PROOF RECEPTACLES WITH GFCI PROTECTION ARE PROVIDED AND MOUNTED WITHIN MOTOR HOUSING LOCATIONS PER NEC ARTICLE 210.63. CIRCUIT SHALL EMANATE FROM PANEL AP-3,CCT.#34.(TYPICAL).
- **E3** SMOOTH BRACING IS REQUIRED FOR LED FIXTURE INSTALLATION UNDER COPING/FLASHING.(TYPICAL)
- **E4** REFER TO SHEET E4.0 FOR CONDUIT AND WIRE SIZE.(TYPICAL)
- **E5** E.C SHALL PROVIDE A WEATHER-PROOF J-BOX ON INSIDE FACE OF PARAPET, MOUNTED 6" BELOW TOP OF PARAPET FOR LIGHTING CONTROL PANEL PHOTOCELL. (PHOTOCELL FURNISHED BY OTHERS AND INSTALLED BY EC). REFER TO LIGHTING CONTROL DETAILS ON E4.1
- **E6** TO LIGHTING ENCLOSURE W/ TIMER. COORDINATE WITH LIGHTING CONTROL DETAILS ON SHEET E4.1
- **E7** COOKING EQUIPMENT EXHAUST FANS. SEE SHEET E3.0 FOR ELECTRICAL REQUIREMENTS. SEE SHEET E3.2 FOR EXHAUST FAN INTERLOCK WIRING DIAGRAMS. (TYPICAL)
- **E8** PROVIDE NEMA 3R DISCONNECT WITH CURRENT LIMITING FUSES TO COMPLY WITH NEC 110 AND 440. ELECTRICAL CONTRACTOR SHALL STUB UP THRU RACEWAY IN CURB TO ELIMINATE CONDUIT PENETRATION OF ROOFING. (TYPICAL)
- **E9** EXTERNAL NEMA 3R MOUNTED ON SIDE OF FAN BY MANUFACTURER. ELECTRICAL CONTRACTOR SHALL STUB-UP THRU ROOF AND PROVIDE FLEXIBLE WEATHERPROOF CONDUIT FROM ROOF PENETRATION TO DISCONNECT (TYPICAL).
- **E10** E.C SHALL PROVIDE A WEATHER-PROOF JUNCTION BOX ON INSIDE OF FACE OF PARAPET FOR PHOTOCELL INSTALLATION. MOUNT JB 6" BELOW TOP OF PARAPET. PHOTOCELL FURNISHED AND INSTALLED BY EC. MOUNT FACING NORTH.
- **E11** PHOTOCELL ON ROOF (SEE SHEET E2.0 FOR CONTINUATION AT DOOR LOCATIONS).
- **E12** TO SOFFIT LIGHT FIXTURES NEAR DOORS. SEE SHEET E2.0 FOR CONTINUATION. TYPICAL FOR CCT LP-1:16.
- **E13** REMOTE CONDENSING UNITS. SEE SHEET E3.0 FOR WIRING AND CIRCUITRY REQUIREMENTS.
- **E14** CANOPY LIGHT. LP-1:11 EC SHALL VERIFY EXACT SPECIFICATIONS AND LOCATION WITH MANUFACTURER. REMOTE POWER SUPPLIES ABOVE ACCESSIBLE CEILING WITHIN VESTIBULE. VERIFY EXACT INFEED REQUIREMENTS IN THE FIELD. SEE NOTE L5 ON SHEET E3.1. (TYPICAL)
- **E15** E.C. SHALL PROVIDE A WEATHER-PROOF JUNCTION BOX WITH ¾"C STUB DOWN TO CEILING SPACE WITH BUSHING FOR ROOF-TOP CAMERA OR SATELLITE. VERIFY EXACT LOCATION(S) WITH MCD AREA CONSTRUCTION MANAGER PRIOR TO INSTALLATION.
- **E16** E.C. SHALL PROVIDE A JUNCTION BOX FOR ARCH LOGO / McDONALD'S FASCIA / PLAY-PLACE SIGN. SEE NOTE L1 ON SHEET E3.1. COORDINATE EXACT LOCATION IN FIELD WITH ACM. ALL SIGNS PROVIDED WITH INTEGRAL DISCONNECT SWITCH FROM MANUFACTURER.(TYPICAL)
- **E17** E.C. SHALL PROVIDE A JUNCTION BOX FOR ROOF-TOP FLAG POLE LIGHTING. VERIFY LOCATION(S) WITH MCD PROJECT MANAGER PRIOR TO INSTALLATION.
- **E18** FLOOD LIGHT MOUNTED ABOVE CANOPY. LP-1:11 EC SHALL VERIFY EXACT SPECIFICATIONS AND LOCATION WITH ARCHITECTURAL ELEVATIONS. VERIFY EXACT INFEED REQUIREMENTS IN THE FIELD. SEE FLOOD LIGHT DETAIL ON SHEET E3.1. (TYPICAL)

DRAWING NOTES

1. SEE DRAWING M-4.0 FOR GENERAL MECHANICAL NOTES.
2. SEE DRAWINGS M-3.0 AND M-4.1 FOR MECHANICAL EQUIPMENT SCHEDULES AND DETAILS.
3. SEE DRAWING M-4.0 FOR MECHANICAL LEGEND.
4. SEE DRAWING K-2.1 FOR REMOTE CONDENSER AND MAC UNIT INFORMATION.
5. SEE ELECTRICAL DRAWINGS FOR ADDITIONAL INFORMATION.

LED GENERAL NOTES

1. PLACE LED FIXTURE AT DESIRED LOCATION AND INSTALL FIXTURE FROM LEFT TO RIGHT WHEN FACING ARCADE AND ATTACH POWER SUPPLY AND MOUNTING BRACKET AS RECOMMENDED BY MANUFACTURER.
2. EC SHALL CONNECT NEW FIXTURES TO A 120V CIRCUIT AND MAKE ALL ELECTRICAL CONNECTIONS AS REQUIRED FOR A COMPLETE OPERATING SYSTEM.
3. POWER SUPPLY SHALL ALWAYS BE INSTALLED TO THE LEFT SIDE OF FIXTURE WHEN FACING ARCADE.
4. OVERALL FIXTURE RUN TO BE CENTERED ON OVERALL LENGTH OF WALL.

LED FIXTURE SCHEDULE:

MARK	SYMBOL	DESCRIPTION	DIFFUSER	LAMPS WATTS	LAMPS TYPE	BALLAST	MOUNTING	MANUFACTURER AND CATALOG NUMBER
SLED3	▭	DOWN ONLY ACCENT LIGHTING (SEE PLAN)	TEMPERED GLASS	1-30W PER FIXTURE	LED	–	SURFACE	SECURITY LIGHTING: SLED-HE-36-DO-U-IO-C16 CUSTOM BUILT FOR EXTERIOR ACCENT CHANNELS.
SLED2-HE	▭	DOWN ONLY ACCENT LIGHTING (SEE PLAN)	TEMPERED GLASS	1-10W PER FIXTURE	LED	–	SURFACE	SECURITY LIGHTING: SLED-HE-24-DO-U-IO CUSTOM BUILT FOR EXTERIOR ACCENT CHANNELS.
SLED3-HE	▭	DOWN ONLY ACCENT LIGHTING (SEE PLAN)	TEMPERED GLASS	1-14W PER FIXTURE	LED	–	SURFACE	SECURITY LIGHTING: SLED-HE-36-DO-U-IO CUSTOM BUILT FOR EXTERIOR ACCENT CHANNELS.
SLED4-HE	▭	DOWN ONLY ACCENT LIGHTING (SEE PLAN)	TEMPERED GLASS	1-19W PER FIXTURE	LED	–	SURFACE	SECURITY LIGHTING: SLED-HE-48-DO-U-IO CUSTOM BUILT FOR EXTERIOR ACCENT CHANNELS.
FL1	▭	UP ONLY ACCENT LIGHTING (SEE PLAN)	TEMPERED GLASS	1-16W PER FIXTURE	LED	–	SURFACE	SECURITY LIGHTING: EL218-W-5-8L-5K-UV-IO-JW10

REV	DATE	DESCRIPTION	BY
.	.	.	.
.	.	.	.
1	12/03/20	SERVICE AREA OPTIMIZATION	WLW
.	11/13/20	USRD SAO SET REVIEW	WLW
2	05/05/20	CIVIL & PLAN REVIEW COMMENTS	WLW
.	01/23/20	PERMIT SET	WLW
.	01/13/20	USRD PROGRESS SET REVIEW	WLW

emanuelson-podas consulting engineers
Emanuelson-Podas, Inc.
7705 Bush Lake Road
Edina, MN 55439
(952) 930-0050 | www.epinc.com

3801.0037

MATTHEW W. PALLIS LICENSED 17667 KANSAS PROFESSIONAL ENGINEER

12/03/20

PREPARED BY:

PREPARED FOR: McDonald's USA, LLC

©2020 McDonald's USA, LLC
These drawings and specifications are the confidential and proprietary property of McDonald's USA, LLC, and shall not be copied or reproduced without written authorization. The contract documents were prepared for use on this specific site in conjunction with its issue date and are suitable for use on other sites in strict accordance therewith. Use of these drawings for reference or example on another project requires the services of properly licensed architects and engineers. Reproduction of the contract documents for re-use on another project is not authorized.

DRAWN BY: MRL
STD ISSUE DATE: 2019_11
REVIEWED BY: WLW
DATE ISSUED: 01-23-20
RQ#19175

TITLE: 2019 STANDARD BUILDING – BB20
4597F10-WOOD/WOOD

DESCRIPTION: WOOD BEARING WALLS W/FIBER CEMENT SIDING & CI WOOD ROOF TRUSS FRAMING FIBER CEMENT PANEL/BATTEN/ALPOLIC PANEL/BRICK EXT. FINISH

SITE ID: 015-0071
SITE ADDRESS: 605 SOUTH 7TH STREET, KANSAS CITY, KS

015-0071.00.B

SHEET NO. E2.2
ELEC. ROOF PLAN

PB = Pullbox
JB = Junction Box
EC = Electrical Contractor
VIF = Verify in Field

ELECTRICAL SCHEDULE

TAG #	QTY	DESCRIPTION	VOLT/PH	FLA	BRK SIZE	COND/WIRE	PNL/CCT	RECEP TYPE	HGT AFF	REQUIREMENTS & REMARKS
004.20E6	1	DIGITAL MERCHANDISER	120/1 ISOLATED	2.6	20A	1/2"C–2#12IG	CP:6	IG5262	6'–5"	–
004.20E7	1	MENU BOARD – DIGITAL	120/1 ISOLATED	2.6 EACH	20A	1/2"C–2#12IG	CP:6	(2) IG5262	6'–2"	–
004.21E1	1	MENU BOARD – DIGITAL – MEDIA PLAYER	120/1 ISOLATED	1.0 EACH	20A	1/2"C–2#12IG	CP:6	(2) IG5262	7'–9"	EC TO MOUNT OUTLETS HORIZONTALLY
004.21E2	1	MENU BOARD – DIGITAL – MEDIA PLAYER	DATA CABLE	–	–	–	–	JB	9'–0"	JB W/ 2–1/2" C. TO TERMINATE ABOVE CEILING W/BUSHINGS. FOR DATA CABLES. SUPPLY W/GROMMETED OPENING IN COVER PLATE
004.21E3	1	MENU BOARD – DIGITAL – MEDIA PLAYER	DATA CABLE	–	–	–	–	JB	7'–9"	JB W/ 2–1/2" C. TO TERMINATE ABOVE CEILING W/BUSHINGS. FOR DATA CABLES. SUPPLY W/ GROMMETED OPENING IN COVER PLATE
004.23E1	1	DIGITAL MERCHANDISER – MEDIA PLAYER	120/1 ISOLATED	1.0	20A	1/2"C–2#12IG	CP:6	IG5262	6'–5"	USE SAME RECEPTACLE AS 4.20E6
004.23E2	1	DIGITAL MERCHANDISER – MEDIA PLAYER	DATA CABLE	–	–	–	–	JB	6'–5"	JB W/ 1" C. TO FULL HEIGHT WALL AND TO ABOVE CEILING W/BUSHINGS.. FOR DATA CABLES. SUPPLY W/GROMMETED OPENING IN COVER PLATE
009.15E1	1	UTILITY CHASE – FFDT INTERIOR WALL	–	–	–	–	–	–	SEE RMKS	UTILITY CHASE AND RECEPTACLES PROVIDED BY K.E.S.
009.16E1	2	UTILITY CHASE – FFDT EXTERIOR WALL	–	–	–	–	–	–	SEE RMKS	UTILITY CHASE AND RECEPTACLES PROVIDED BY K.E.S.
010.10E1	1	CO2 DRIVEN KETCHUP DISPENSER	–	–	–	–	–	JB	10"	FOR CO2 LINE TO KETCHUP DISP. IF CHASE IS NOT SPECIFIED. (SEE P1.6)
012.03E4	1	BAKED GOODS DISPLAY CASE – 14"	120/1	2.5	15A	1/2"C–2#12	AP–3:1	5–15R	SEE RMKS	EC TO EXTEND CIRCUIT BELOW SLAB TO NEAREST FULL HEIGHT WALL, PROVIDE RECEP. IN COUNTER–MOUNTED RACEWAY
020.01E1	2	AUTOMATED BEVERAGE SYSTEM 2.0	120/1	5.0	20A	1/2"C–2#12	AP–1:12	5–20R	2'–0"	–
020.01E2	2	AUTOMATED BEVERAGE SYSTEM 2.0	120/1	14.9	20A	1/2"C–2#12	AP–1:5	5–20R	3'–10"	FOR PRE–COOLER
021.01E3	3	COFFEE BREWER (THERMAL POTS)	120–208/1	15.5	20A	1/2"C–3#12	AP–1:(2,4)(14,16), AP–3:(26,28)	BY KES	SEE RMKS	EC TO EXTEND CIRCUIT TO L14–20R RECEPTACLE IN CHASE
021.09E3	1	HOT WATER DISPENSER	120/1	15.4	20A	1/2"C–2#12	AP–2:13	BY KES	SEE RMKS	EC TO EXTEND CIRCUIT TO 5–20R RECEPTACLE IN CHASE
023.10E1	1	ESPRESSO BREWER	208/1	21.6	30A	1/2"C–2#10	AP–1:(19,21)	BY KES	SEE RMKS	EC TO EXTEND CIRCUIT TO L6–30R RECEPTACLE IN CHASE
023.12E1	2	COFFEE CREAM DISPENSER	120/1	1.0	20A	1/2"C–2#12	AP–1:8	BY KES	SEE RMKS	EC TO EXTEND CIRCUIT TO 5–20R RECEPTACLE IN CHASE
023.14E1	1	SUGAR/SWEETENER DISPENSER	120/1	1.5	20A	1/2"C–2#12	AP–1:8	BY KES	SEE RMKS	EC TO EXTEND CIRCUIT TO 5–20R RECEPTACLE IN CHASE
024.01E1	1	ORANGE JUICE DISPENSER	120/1	10.0	20A	1/2"C–2#12	AP–1:8	BY KES	SEE RMKS	EC TO EXTEND CIRCUIT TO 5–20R RECEPTACLE IN CHASE
025.07E1	1	INFUSION TEA BREWER – MIS	120–208/1	13.0	20A	1/2"C–3#12	AP–2:(32,34)	L14–20R	2'–3"	–
025.07E2	1	INFUSION TEA BREWER – MIS	–	–	–	–	–	JB	2'–3"	FOR WATER LINE TO ICED TEA BREWER IF CHASE IS NOT SPECIFIED. (SEE P1.6)
031.03E1	1	SODA SYSTEM PACKAGE – B.I.B. (RECIRCULATING– 3 TOWERS)	208/3	26.0	30A	3/4"C–3#10	AP–2:(37,39,41)	SEE RMKS	3'–0" SEE RMKS	EC SUPPLIES 30A–3P NF DISC SW MTD 9" BELOW CEILING PER NEC SECT. 404.8(A)
031.03E2	1	SODA SYSTEM PACKAGE – B.I.B. (RECIRCULATING– 3 TOWERS)	–	–	–	–	–	JB	4'–0"	FOR CONTROL WIRES FROM REMOTE CONDENSING UNIT
031.03E3	1	SODA SYSTEM PACKAGE – B.I.B. (RECIRCULATING– 3 TOWERS)	120/1	(2) 6.8	20A	1/2"C–2#12	AP–2:35	5–20R	6'–6"	FOR WATER BOOSTER SYSTEM AND OPTIONAL AIR COMPRESSOR
032.02E1	1	REVERSE OSMOSIS WATER FILTRATION SYSTEM – TANKLESS	120/1	4.0	20A	1/2"C–2#12 EA.	AP–2:23	5–20R	6'–0"	–
032.04E1	1	WATER FILTRATION SYSTEM	120/1	0.08	20A	1/2"C–2#12 EA.	AP–2:23	5–20R	6'–0"	–
037.03E1	2	CO2 SAFETY SYSTEM – DETECTOR	120/1	1.0	20A	1/2"C–2#12	LP–1:16	JB	SEE RMKS	PROVIDE LOCKOUT CB. SEE MECHANICAL DRAWINGS
037.03E2	2	CO2 SAFETY SYSTEM	–	–	–	–	–	JB	SEE RMKS	FOR LV WIRES. STUB 3/4"C. ABV. CLG. SEE MECHANICAL DRAWINGS
037.03E4	4	CO2 SAFETY SYSTEM – CO2 DETECTOR AV ALARM	–	–	–	–	–	JB	7'–0" MINIMUM	STUB 3/4"C. ABOVE CLG. FOR LV COND. TO 037.03E2. SEE MECHANICAL DRAWINGS
038.00E1	1	CLEAN IN PLACE PANEL	120/1	1.0	20A	1/2"C–2#12	AP–2:21	5–20R	5'–6"	–
039.10E1	1	ICE MACHINE – 1400 LB.	208/3	12.8	20A	1/2"C–3#12	AP–2:(1,3,5)	SEE RMKS	SEE RMKS	EC SUPPLIES 30A–3P NF DISC SW MTD9"BELOW CEILING PER NEC 404.8(A) EX.2 VERIFY W/ AHJ
039.10E2	1	ICE MACHINE – 1400 LB.	–	–	–	–	–	JB	4'–6" SEE RMKS	CONTROL WIRES TO REMOTE CONDENSER
039.15E1	2	ICE MACHINE – 1000 LB.	120/1	1.1	15A	1/2"C–2#12	AP–1:37,39	5–20R	SEE RMKS	MOUNT 9" BELOW CEILING – CIRCUIT BREAKERS SHALL BE HACR TYPE
039.15E2	2	ICE MACHINE – 1000 LB.	–	–	–	1/2"C	–	JB	SEE RMKS	MOUNT 9" BELOW CEILING – CONTROL WIRES TO REMOTE CONDENSER
041.06E1	1	ICE MACHINE REMOTE CONDENSER – 1400 LB.	208/1	1.0	20A SEE RMKS	1/2"C–3#12	AP–1:(26,28)	SEE RMKS	SEE RMKS	EC TO PROVIDE WP 30A–2P NF DISC AT UNIT ON ROOF – CIRCUIT BREAKERS SHALL BE HACR TYPE
041.09E1	2	ICE MACHINE REMOTE CONDENSER – 1000 LB.	208/3	10.2	15A SEE RMKS	1/2"C–3#12 SEE RMKS	AP–1:(32,34,36)(38,40,42) AP–2:(1,3,5)	SEE RMKS	SEE RMKS	EC TO PROVIDE WP 30A–3P NF DISC AT UNIT ON ROOF – CIRCUIT BREAKERS SHALL BE HACR TYPE
043.22E1	1	OPTIMIZED ORDER ASSEMBLY TABLE	120/1	6.0	20A	SEE RMKS	KES BREAKER PANEL	SEE RMKS	SEE RMKS	PLUGS INTO KES OUTLET CHASE FOR HEAT LAMPS
044.29E1	1	BREAKER PANEL– 125 AMP – 3 PHASE EQUIPMENT MOUNTED	120–208/3	SEE RMKS	125A	2"C–4#1	MDP:5	–	SEE RMKS	EC TO EXTEND AND CONNECT ELECTRICAL SERVICE. HARDWIRE TO KES BREAKER PANEL.
047.06E2	1	CHILLED RAIL	120/1	2.0	20A	1/2"C–2#12	AP–5:2	BY KES	SEE RMKS	PLUGS INTO SPARE PLUG ON PREP TABLE
061.00E1	1	FRY BAGGING STATION 36"	120/1	15.7	20A	1/2"C–2#12	AP–1:31	JB	4'–0"	–
065.24E1	1	3–VAT LOV FRYER – ELECTRIC – F/F/F	208/3	38.9 EA. VAT	(3) 50A	1"C–3#6 EA. VAT	AP–3:(2,4,6)(10,12,14)(18,20,22)	BY KES	SEE RMKS	PLUGS INTO RACEWAY RECEP WITH(1)L21–20P INTERLOCK PLUG &(3) 15–60P POWER PLUG BY KES
066.39E1	1	4–VAT LOV FRYER – ELECTRIC – S/S/S/S	208/3	38.9 EA. VAT	(4) 50A	1"C–3#6 EA. VAT	AP–5:(12,14,16)(20,22,24)(28,30,32)(36,38,40)	SEE RMKS	SEE RMKS	PLUGS INTO RACEWAY RECEP WITH(1)L21–20P INTERLOCK PLUG &(4) 15–60P POWER PLUG BY KES
073.00E1	1	UNIVERSAL EXHAUST HOOD 3–VAT FRYER	120/1	12.5, 9.8	(2)20A–1P	1/2"C–2#12EA	AP–1:23,41	BY KES	SEE RMKS	EC TO CONN POWER TO RACEWAY FLA = 12.0 FRYER CONTROLS, 0.5 CAPTURE JET & 9.8 INDIVID. EXHAUST FAN INTERLOCK
079.23E1	1	UNIVERSAL EXHAUST HOOD FULL–CLAM/4–VAT FRYER	120/1	17.6, 13.8	(2)20A–1P	1/2"C–2#12EA	AP–1:29,41	BY KES	SEE RMKS	EC TO CONN POWER TO RACEWAY FLA=3.6 GRILL,13.0 FRYER CONTROLS, 1.0 CAPTURE JET & 13.8 INDIVID EXHAUST FAN INTERLOCK
079.26E2	2	VENTLESS HOOD COMBI OVEN	120/1	8.0	15A	1/2"C–2#12	AP–4:(27)(29)	BY KES	SEE RMKS	EC TO EXTEND DEDICATED CIRCUIT TO 5–15R RECEPTACLE IN CHASE
085.05E1	1	FROZEN FRY DISPENSER	120/1	9.0	20A	1/2"C–2#12	AP–1:27	5–20R	4'–0"	–
091.02E1	1	WALL MOUNT FREEZER UNIT–SINGLE WIDE–HIGH CAPACITY	120/1	5.0	20A	1/2"C–2#12	AP–3:40	5–20R	7'–6"	–
093.00E1	1	UNIVERSAL EXHAUST HOOD FULL–CLAM GRILL	120/1	13.9	20A	1/2"C–2#12	AP–2:17	BY KES	SEE RMKS	EC TO CONN. POWER TO RACEWAY FLA = 3.6 GRILL CONTROLS, 0.5 CAPTURE JET & 9.8 INDIVID. EXHAUST FAN INTERLOCK
096.21E1	2	36" NEXT GEN 3–PLATEN CLAMSHELL GRILL – ELECTRIC	208/3	21.7, 43.3	(2)50A	1–1/2"C– 6#4	AP–4:(1,3,5)(9,11,13)	BY KES	SEE RMKS	PLUGS IN RACEWAY RECEP WITH(1)L21–20P INTERLOCK& (2) 15–50P POWER PLUG EA GRILL
097.08E1	1	MEAT FREEZER – DOUBLE WIDE – HIGH CAPACITY – RIGHT HAND	120/1	7.0	20A	1/2"C–2#12	AP–2:19	5–15R	SEE RMKS	UNIT PLUGS INTO RACEWAY RECEPTACLE
116.25E4	3	UNIVERSAL HOLDING CABINET – HIGH DENSITY – 2–SIDED – PIN & SLEEVE	208/1	14.2	20A	1/2"C–2#12	AP–3:1,3	BY KES	5'–6"	PLUGS INTO OVERHEAD RECEPTACLE # 320C6W(B) VIA EXTENSION ON #117.26 – HEIGHT TO BOTTOM OF RECEPTCLE
117.26E1	1	UHC TABLE HUB & SPOKE – 2 SIDED – 51"D x 34"W – PIN&SLEEVE	120/1	2.0	20A	1/2"C–2#12	AP–1:7	BY KES	5'–6"	PLUGS INTO OVERHEAD RECEPTACLE # 320C4W(Y) PROVIDED BY KES– HEIGHT TO BOTTOM OF RECEPTACLE
118.00E1	1	Q'ING OVEN – PIN & SLEEVE	208/1	15.4	20A	1/2"C–2#12	AP–4:(13,15)	SEE RMKS	5'–6"	PLUGS INTO OVERHEAD RECEPTACLE # 320C6W(B) PROVIDED BY KES– HEIGHT TO BOTTOM OF RECEPTACLE
118.03E1	2	Q'ING OVEN – PIN & SLEEVE	208/1	14.9	20A	1/2"C–2#12	AP–2:(18,20)(28,30)	SEE RMKS	5'–6"	PLUGS INTO OVERHEAD RECEPTACLE # 320C6W(B) PROVIDED BY KES– HEIGHT TO BOTTOM OF RECEPTACLE
122.27E1	1	NEXT GEN. UNIVERSAL RADIANT TOASTER – PIN & SLEEVE	208/1	25.2	30A	1/2"C–2#10	AP–3:(3,5)	SEE RMKS	5'–6"	PLUGS INTO OVERHEAD RECEPTACLE # 330C6W(B) PROVIDED BY KES– HEIGHT TO BOTTOM OF RECEPTACLE
122.28E2	1	NEXT GEN. UNIVERSAL CONTACT TOASTER – PIN & SLEEVE	208/1	25.2	30A	1/2"C–2#10	KES BREAKER PANEL	SEE RMKS	SEE RMKS	PLUGS INTO KES RACEWAY RECEPTACLE
123.32E1	1	HUB & SPOKE ELECTRIC COMMUNICATION UTILITY	208/1	13.0	15A	SEE RMKS	KES BREAKER PANEL	SEE RMKS	SEE RMKS	PLUGS INTO KES OUTLET CHASE.
123.34E1	1	PREP TABLE – HD – 2–SIDED KEV – 38"D x 73 1/2" – PIN & SLEEVE W/ REF.	120/1	7.0	20A	SEE RMKS	KES BREAKER PANEL	SEE RMKS	SEE RMKS	PLUGS INTO KES RACEWAY RECEPTACLE
123.35E1	1	PREP TABLE – HD – 2–SIDED KEV – 38"D x 67 1/2" – PIN & SLEEVE W/ REF.	120/1	7.0	20A	1/2"C–2#12	AP–2:7	SEE RMKS	5'–6"	PLUGS INTO OVERHEAD RECEPTACLE # 320C4W(Y) PROVIDED BY KES– HEIGHT TO BOTTOM OF RECEPTACLE
125.00E2	2	RAPID BUN STEAMER	208/1	14.3	30A	SEE RMKS	KES BREAKER PANEL	SEE RMKS	SEE RMKS	PLUGS INTO KES RACEWAY RECEPTACLE
130.00E3	2	COMBI OVEN	208/3	15.1	30A	1/2"C–3#10	AP–4:(21,23,25)	BY KES	SEE RMKS	EC TO EXTEND CIRCUIT TO L430R9 RECEPTACLE IN CHASE
152.05E1	1	WAREWASHER	120/1	11.4	20A	1/2"C–2#12	AP–3:25	5–20R	6'–0"	–
163.02E1	4	REMOTE ANSUL PULL	–	–	–	–	–	JB	SEE DETAILS	4" OCTAGONAL, RACO #165 OR EQUAL MUST BE USED.
171.01E1	1	WALK–IN COOLER / FREEZER FLOORLESS	120/1	10.00	20A	1/2"C–2#12	AP–2:14,16	JB	FLUSH ON CLG	JB FOR LIGHTS & DOOR HEATER– UNSWITCHED LIGHT TO BE IN BOTH COOLER & FREEZER,EC TO CONNECT POWER
171.01E2	1	WALK–IN COOLER / FREEZER FLOORLESS	–	–	–	–	–	VIF	VIF	EC TO FURNISH & INSTALL CONDUIT,WIRE & LIGHT FIXTURES& OTHER DEVICES INSIDE COOLER/FREEZER BOX
174.00E1	1	REMOTE CONDENSING UNIT	208/3	41.0	50A	1"C–3#6	MDP:11	JB	VIF	TERMINATE PWR CONDUCTORS TO REMOTE COND UNIT FUSIBLE DISC SWITCH, IF MASTER–BILT USE 70A BKR & #4 CONDUCTORS
174.00E2	1	REMOTE CONDENSING UNIT	LOW VOLT WIRES	–	–	–	–	–	VIF	L V WIRES CONNECT MAC UNIT TO EVAPS & SHALL BE ROUTED IN SEALTITE WHERE EXPOSED TO WEATHER
175.11E1	1	COOLER EVAPORATOR	208/1	–	SEE RMKS	1/2"C–2#12	PWR BY MAC UNIT	JB	FLUSH ON CLG	IF MAC UNIT IS NOT USED, PROVIDE A 20A CIRCUIT
175.11E2	1	COOLER EVAPORATOR	LOW VOLT WIRES	–	–	–	–	–	FLUSH ON CLG	L V WIRES CONN MAC UNIT TO EVAPS & SHALL BE ROUTED SEPARATELY FROM POWER CONDUCTORS
176.21E1	1	FREEZER EVAPORATOR	208/1	–	30A SEE RMKS	1/2"C–2#10	PWR BY MAC UNIT	JB	FLUSH ON CLG	NO CCT BREAKER REQ WITH MAC UNIT–IF FAN SHUT–OFF SW. REQ SYS PUMPDOWN RELAY MUST BE INSTALLED
176.21E2	1	FREEZER EVAPORATOR	LOW VOLT WIRES	–	–	–	–	–	FLUSH ON CLG	L V WIRES CONN MAC UNIT TO EVAPS & SHALL BE ROUTED SEPARATELY FROM POWER CONDUCTORS
177.03E1	1	REACH–IN REFRIGERATOR–SINGLE WIDE	120/1	5.7	20A	1/2"C–2#12	AP–2:31	5–20R	7'–6"	–
177.03E2	1	REACH–IN REFRIGERATOR–SINGLE WIDE	120/1	5.7	20A	1/2"C–2#12	AP–2:31	SEE RMKS	SEE RMKS	EC TO EXTEND CIRCUIT TO 5–20R RECEPTACLE IN CHASE
178.05E1	3	REACH–IN FREEZER–SINGLE WIDE	120/1	10.0	20A	1/2"C–2#12	AP–3:34,36	5–20R	7'–6"	–
179.15E3	1	REFRIGERATOR – 2 DRAWER BASE	120/1	3.2	20A	1/2"C–2#12	AP–3:19	BY KES	SEE RMKS	EC TO EXTEND CIRCUIT TO 5–20R RECEPTACLE IN CHASE
179.15E5	1	REFRIGERATOR – 2 DRAWER BASE	120/1	3.2	20A	1/2"C–2#12	AP–1:7	SEE RMKS	SEE RMKS	PLUGS INTO ITEM #117.26 WHICH PLUGS INTO OVERHEAD RECEPTACLE
181.13E1	1	REFRIGERATOR – SPECIALTY COFFEE– 27" WIDE	120/1	3.9	20A	1/2"C–2#12	AP–2:22	BY KES	SEE RMKS	EC TO EXTEND CIRCUIT TO 5–20R RECEPTACLE IN CHASE
181.14E1	1	REFRIGERATOR – WORK TOP – 48"WIDE	120/1	5.0	20A	1/2"C–2#12	AP–2:26	5–20R	2'–0"	–
183.00E1	1	REFRIGERATOR/FREEZER – 2 DRAWER BASE	120/1	3.0	20A	1/2"C–2#12	AP–3:19	5–20R	2'–0"	–
196.06E1	1	SAFE – STANDARD BLDG.	120/1	1.0	20A	1/2"C–2#12	AP–1:7	5–20R	2'–0"	PROVIDE LOCKOUT TYPE CB

PB = Pullbox
JB = Junction Box
EC = Electrical Contractor
VIF = Verify in Field

ELECTRICAL SCHEDULE

TAG #	QTY	DESCRIPTION	VOLT/PH	FLA	BRK SIZE	COND/WIRE	PNL/CCT	RECEP TYPE	HGT AFF	REQUIREMENTS & REMARKS
197.01E1	1	HAND WASH TIMER	120/1	0.1	20A	1/2"C–2#12	AP–1:33	5–20R	4'–6"	–
203.02E1	1	HEAT TREAT COMBINATION SHAKE/SUNDAE MACHINE	208/3	35.0	45A	3/4"C–3#6	AP–1:(18,20,22)	4x4x4 PB	1'–0"	RECEP #A460R9 BY KES, IF CARPIGIANNI K3 IS ORDERED USE A 30A BRKR & #10 CONDUCTORS –EC MAKES FINAL CONN
205.08E1	1	BIC MACHINE	120/1	8.6	20A	1/2"C–2#12	AP–2:29	BY KES	SEE RMKS	EC TO EXTEND DEDICATED CIRCUIT TO 5–20R RECEPTACLE IN CHASE
205.09E2	1	FROZEN BEVERAGE DISPENSER	208/1	20.0	30A	1/2"C–2#10	AP–4:(17,19)	SEE RMKS	SEE RMKS	RECEP L6–30R IN CHASE BY KES, EC MAKES FINAL CONN
208.00E3	1	FINISHING STATION	120/1	8.0	20A	1/2"C–2#12	AP–4:18	5–20R	2'–0"	FOR REFRIGERATED BASE AND COUNTERTOP UNIT
209.06E1	1	McDELIVERY CENTER	120/1	1.5	20A	1/2"C–2#12	AP–4:23	5–20R	SEE RMKS	EC TO EXTEND CIRCUIT TO 5–20R RECEPTACLE IN CHASE
210.00E10	1	CASH RECYCLER	120/1 ISOLATED	4.4	20A	1/2"C–2#12IG	CP:23	(2) IG5262	SEE RMKS	PROVIDE RECEP. IN COUNTER–MOUNTED RACEWAY
213.00E11	1	TABLE LOCATOR SYSTEM	120/1 ISOLATED	2.6	20A	1/2"C–2#12IG	CP:4	SEE RMKS	SEE RMKS	EC TO EXTEND CIRCUIT BELOW SLAB TO NEAREST FULL HEIGHT WALL, PROVIDE IG5262 RECEP. IN COUNTER–MOUNTED RACEWAY
213.00E8	1	TABLE LOCATOR SYSTEM	120/1 ISOLATED	2.6	20A	1/2"C–2#12IG	CP:21	SEE RMKS	4'–0"	TSS SERVER, COORDINATE WITH MANUFACTURERS REQUIREMENTS
214.00E2	1	CREW VIDEO	120/1 ISOLATED	3.0	20A	1/2"C–2#12IG	CP:24	IG5262	5'–0"	–
214.02E1	1	TECHNOLOGY RACK	120/1 ISOLATED	5.0	20A	1/2"C–2#12IG	CP:11	IG4700	7'–6"	FOR SWITCHES, HUBS AND DRIVE–THRU CAMERAS
214.02E2	1	TECHNOLOGY RACK	120/1 ISOLATED	3.0	20A	1/2"C–2#12IG	CP:12	IG4700	3'–0"	FOR SECURITY SYSTEM
214.02E3	1	TECHNOLOGY RACK	120/1 ISOLATED	10.0	20A	1/2"C–2#12IG	CP:15	IG4700	3'–0"	FOR CASHLESS DEVICE UPS
214.02E4	1	TECHNOLOGY RACK	120/1 ISOLATED	12.0	20A	1/2"C–2#12IG	CP:17	IG4700	3'–0"	FOR POS SYSTEM UPS AND ORB CONTROLLER
214.02E5	1	TECHNOLOGY RACK	DATA CABLE	–	–	–	–	8x6x4 PB	7'–6"	EXTEND (2) 2 1/2" CONDUIT ABOVE CLG. W/BUSHING FOR DATA CABLES
215.00E12	2	POS REGISTER – FRONT COUNTER	120/1 ISOLATED	3.0 EA.	–	3/4"C–2#12IG	CP:19	IG4700	SEE RMKS	PROVIDE IG RECEP. IN COUNTER–MOUNTED RACEWAY
215.00E15	1	POS REGISTER – FRONT COUNTER	DATA CABLE	–	–	–	–	4x4x4 PB	10"	EXTEND 2" CONDUIT UNDER SLAB TO NEAREST FULL HEIGHT WALL AND TO ABOVE CEILING FOR POS DATA CABLES.
215.00E3	1	POS REGISTER – FRONT COUNTER	DATA CABLE	–	–	–	–	4x4x4 PB	10"	EXTEND 2" CONDUIT TO ABOVE CEILING FOR POS DATA CABLES
215.02E1	1	POS REGISTER – 2 WINDOW D/T	120/1 ISOLATED	3.0 EA.	SEE RMKS	1/2"C–2#12IG	SEE REMARKS	(2)IG4700	2'–0"	IN ORDER BOOTH, CONNECT TO CP:7 – IN PRESENTERS BOOTH, CONNECT TO CP:8
215.02E10	2	POS REGISTER – 2 WINDOW D/T	120/1 ISOLATED	3.0 EA.	20A	1/2"C–2#12IG	CP:1	BY KES	SEE RMKS	EC TO EXTEND CIRCUIT TO IG4700 RECEPTACLE IN CHASE
215.02E12	1	POS REGISTER – 2 WINDOW D/T	–	–	–	–	–	18x12x4 PB	10"	REFER TO D/T LOW VOLTAGE CONDUIT DIAGRAM FOR CONDUITS UNDER SLAB AND EXTEND (2) 2 1/2"C. TO ABOVE CLG.
215.02E13	2	POS REGISTER – 2 WINDOW D/T	–	–	–	–	–	4x4x4 PB	10"	EXTEND 1 1/2"C. UNDER SLAB TO 217.11E1 AND 2 1/2" C. TO ABOVE CEILING FOR POS DATA CABLES
215.04E5	2	POS – KVS MONITOR	120/1 ISOLATED	1.5 EA.	20A	1/2"C–2#12IG	CP:3	SEE RMKS	SEE RMKS	EC TO EXTEND CIRCUIT TO IG4700 RECEPTACLE IN CHASE
215.04E6	1	POS – KVS MONITOR	120/1 ISOLATED	1.5 EA.	20A	1/2"C–2#12IG	CP:3	(2)IG4700	FLUSH ON CLG	–
216.00E1	3	POS – VIDEO MONITOR	120/1 ISOLATED	1.5 EA.	20A	1/2"C–2#12IG	CP:3,8 SEE REMARKS	IG4700	SEE RMKS	IN PRESENTERS BOOTH MOUNT @ 8'–0"–CONN. TO CP:8, IN PREP LINE AREA, CONNECT TO JB/RACEWAY ON EQUIPMENT IN UPPER HLZ CHASE– CONN. TO CP:3
216.00E13	3	POS – VIDEO MONITOR	120/1 ISOLATED	1.5 EA.	20A	1/2"C–2#12IG	CP:3	SEE RMKS	SEE RMKS	EC TO EXTEND CIRCUIT TO IG4700 RECEPTACLE IN CHASE
216.00E14	3	POS – VIDEO MONITOR	120/1 ISOLATED	1.5 EA.	20A	1/2"C–2#12IG	CP:9	IG4700	SEE RMKS	EXTEND CONDUIT DOWN GRILL HOOD SHROUD AND PROVIDE IG4700 RECEPTACLE
216.00E7	3	POS – VIDEO MONITOR	120/1 ISOLATED	1.5 EA.	20A	1/2"C–2#12IG	CP:1	BY KES	SEE RMKS	EC TO EXTEND CIRCUIT TO IG4700 RECEPTACLE IN CHASE
216.04E2	1	ORB MONITOR (MINI)/SCANNER	120/1 ISOLATED	1.5 EA.	20A	1/2"C–2#12IG	CP:4	IG4700	SEE RMKS	EC TO EXTEND CIRCUIT BELOW SLAB TO NEAREST FULL HEIGHT WALL, PROVIDE RECEP. IN COUNTER–MOUNTED RACEWAY
216.05E4	1	ORB MONITOR	120/1 ISOLATED	1.5 EA.	20A	1/2"C–2#12IG	CP:4	IG4700	8'–1"	–
216.05E5	1	ORB MONITOR	DATA CABLE	–	–	–	–	JB	8'–1"	JB W/ 1–1/2" C. TO TERMINATE ABOVE CEILING W/BUSHINGS. FOR DATA CABLES. SUPPLY W/ GROMMETED OPENING IN COVER PLATE
217.03E4	1	POS – COD OPTICAL ISOLATOR	120/1 ISOLATED	1.0	20A	1/2"C–2#12IG	CP:14	IG5262	7'–6"	–
217.10E1	2	REMOTE DETECTOR LOOP	–	–	–	–	–	–	–	1 1/2"CONDUIT–CONN TO PULLBOX#215.03E5,215.01E4, OR 215.02E12 PER DRIVE–THRU CONFIG–SEE SITE PLAN
217.11E1	2	DETECTOR LOOP	–	–	–	–	–	–	–	1 1/2"CONDUIT–CONN TO PULLBOX#215.02E5,215.02E13, OR 215.02E4 PER DRIVE–THRU CONFIG–SEE SITE PLAN
217.13E1	1	MERGE POINT MONITOR (DOUBLE DRIVE THRU)	120/1	2.0	20A	1/2"C–2#12	AP–1:11	5–20R	3'–6"	DO NOT POWER FROM POS CIRCUIT
217.13E2	2	MERGE POINT MONITOR (DOUBLE DRIVE THRU)	120/1	2.0	20A	1/2"C–2#12	AP–1:11	BY KES	SEE RMKS	EC TO EXTEND CIRCUIT TO 5–20R RECEPTACLE IN CHASE
217.14E1	1	POS– VIDEO MONITOR (DOUBLE DRIVE THRU)	120/1 ISOLATED	1.5	SEE RMKS	1/2"C–2#12IG	CP:7	IG4700	3'–6"	–
217.18E1	3	HAND HELD ORDER TAKER AND MANAGEMENT OF SHIFT EQUIPMENT	120/1	5.0	20A	1/2"C–2#12	AP–1:15	5–20R	4'–6"	–
217.19E1	1	POS–TIMER	120/1 ISOLATED	1.0	20A	1/2"C–2#12IG	CP:7	IG4700	7'–6"	
217.24E1	1	DANGER POINT MONITOR (DOUBLE DRIVE–THRU)	120/1	2.0	20A	1/2"C–2#12	AP–1:11	5–20R	8'–0"	DO NOT POWER FROM POS CIRCUIT
217.26E1	1	ZOOM TIMER	120/1 ISOLATED	3.0	20A	1/2"C–2#12IG	CP:29	IG4700	7'–6"	–
217.26E2	1	ZOOM TIMER	DATA CABLE	–	–	–	–	JB	7'–6"	JB W/ 1–1/2" C. TO TERMINATE ABOVE CEILING W/BUSHINGS. FOR DATA CABLES. SUPPLY W/ GROMMETED OPENING IN COVER PLATE
219.00E10	2	POS – RECEIPT PRINTER	120/1 ISOLATED	0.7	20A	3/4"C–2#12IG	SEE RMKS	IG4700	SEE RMKS	PROVIDE IG RECEP. IN COUNTER–MOUNTED RACEWAY, POWER FROM SAME CIRCUIT AS 215.00E12
219.00E3	1	POS – RECEIPT PRINTER/CASHLESS	120/1 ISOLATED	0.7	20A	1/2"C–2#12IG	CP:4,7 SEE RMKS	IG4700	2'–0"	FOR RECEIPT LOCATED IN FRONT COUNTER POWER FROM CP:4 IN PRESENTER'S BOOTH CP:7
219.00E7	2	POS – RECEIPT PRINTER	120/1 ISOLATED	0.7	20A	1/2"C–2#12IG	CP:3	BY KES	SEE RMKS	EC TO EXTEND IG CIRCUIT TO IG4700 RECEPTACLE IN KES OUTLET CHASE.
219.05E2	2	STICKY LABEL PRINTER	120/1 ISOLATED	0.7	20A	1/2"C–2#12IG	CP:1	BY KES	SEE RMKS	EC TO EXTEND IG CIRCUIT TO IG4700 RECEPTACLE IN CH

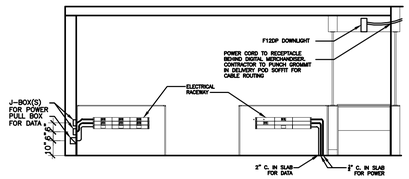

SYMBOL	CATALOG #	DESCRIPTION	QUANTITY
	HBLA5370R & GH70D	RECEPTACLE COVERPLATE WITH GRAINGER TAMPER LOCK, ISOLATED GROUND (RED) & GFCI RECEPTACLE	1 PER ISOLATED GRD RECEPTACLE
	HBLA5370R & S-70R	WATERTIGHT COVERPLATE WITH STRAIGHT BLADE RECEPTACLE	1 PER STRAIGHT BLADE RECEPTACLE
	HBLA5370R	COMMUNICATIONS COVERPLATE	2
	HBLA370S0S0S0S0	4" SECTION OF RACEWAY, INCLUDES COUPLERS	0
	HBLA370S0S0S0S0	4" SECTION OF RACEWAY, INCLUDES COUPLERS	0
	HBLA370108S2	SERVICE ENTRANCE FITTING & BUSHING (INCLUDES COUPLER)	2
	HBLA370108	BLANK END FITTING	2
N/A	HBLA5370T	COUPLER (INCLUDED WITH RACEWAY SECTION)	5
N/A	HBLA5370R	GROUND ADAPTER	2

NOTES:
1. REFER TO SERVICE POD MANUFACTURER INSTRUCTIONS FOR EXACT PLACEMENT OF RACEWAY
2. RACEWAY AND RECEPTACLES TO BE PROVIDED WITH SERVICE POD, INSTALLED BY CONTRACTOR.
3. DETAIL SHOWN IS A TYPICAL CONFIGURATION ONLY. SITE SPECIFICS MIGHT CAUSE DEVIATIONS.

1 / E-3.1 MODULAR COUNTER RACEWAY DETAIL
NOT TO SCALE

REMOTE ANSUL PULL STATION FOR REFERENCE

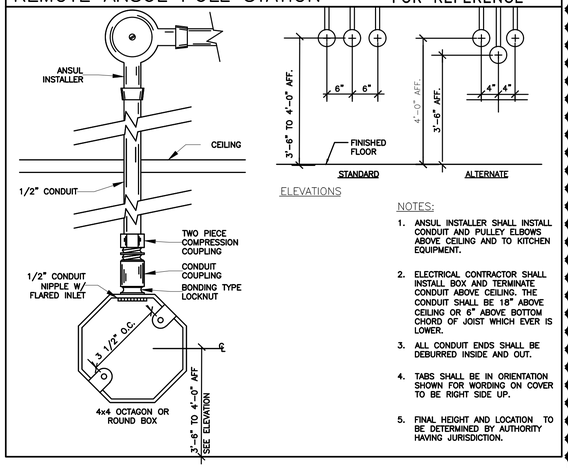

ELEVATIONS

NOTES:

1. ANSUL INSTALLER SHALL INSTALL CONDUIT AND PULLEY ELBOWS ABOVE CEILING AND TO KITCHEN EQUIPMENT.
2. ELECTRICAL CONTRACTOR SHALL INSTALL BOX AND TERMINATE CONDUIT ABOVE CEILING. THE CONDUIT SHALL BE 18" ABOVE CEILING OR 6" ABOVE BOTTOM CHORD OF JOIST WHICH EVER IS LOWER.
3. ALL CONDUIT ENDS SHALL BE DEBURRED INSIDE AND OUT.
4. TABS SHALL BE IN ORIENTATION SHOWN FOR WORDING ON COVER TO BE RIGHT SIDE UP.
5. FINAL HEIGHT AND LOCATION TO BE DETERMINED BY AUTHORITY HAVING JURISDICTION.

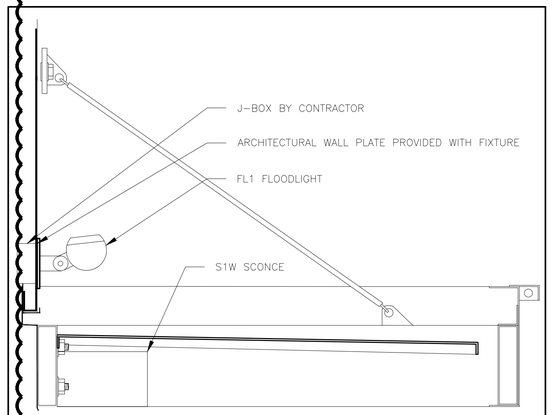

2 / E-3.1 FLOODLIGHT MOUNTING DETAIL
NOT TO SCALE

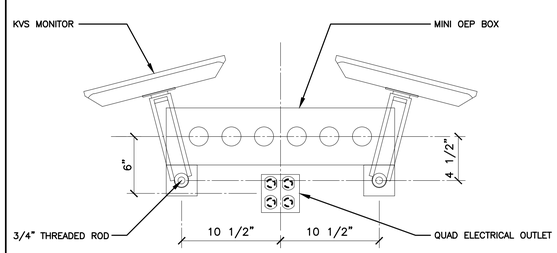

3 / E-3.1 OEP MOUNTING DETAIL
NOT TO SCALE

GENERAL ELECTRICAL NOTES:

INSTALLATION METHODS:

M1. ALL ELECTRICAL MATERIAL USED ON THIS PROJECT SHALL BE "UL" LISTED AND LABELED.

M2. ALL DIMENSIONS SHOWN ARE TAKEN FROM FACE OF GYP BOARD/PLYWOOD. THE EC SHALL MAKE NECESSARY DIMENSIONAL ALLOWANCES. ALL DIMENSIONS SHOWN ARE TO CENTER LINE OF OUTLET BOX AND/OR RECEPTACLE UNLESS NOTED OTHERWISE.

M3. ALL J-BOXES, DCOs, AND OTHER ELECTRICAL DEVICES SHOWN SHALL BE RECESSED INTO A WALL, FLOOR OR CEILING UNLESS SPECIFICALLY NOTED OTHERWISE.

M4. ALL RECEPTACLES (EXCEPT SPECIFIED HUBBELL PIN & SLEEVE TYPES) SHALL BE FURNISHED BY THE EC. THE RECEPTACLES INCLUDING PIN AND SLEEVE TYPE SHALL BE INSTALLED BY THE EC.

M5. EC SHALL PROVIDE STAINLESS STEEL COVER PLATES ON ALL RECEPTACLES AND J-BOXES. ADDITIONALLY, EC SHALL PROVIDE ORANGE NYLON COVER PLATES MARKED "COMPUTER ONLY" ON ALL ISOLATED GROUND/DEDICATED CIRCUIT RECEPTACLES. PURCHASE PJ8CO (ONE DUPLEX) OR PJ82CO (TWO DUPLEX) FROM HUBBELL.

M6. ROUGH-INS FOR OPTIONAL EQUIPMENT ARE SHOWN ON THESE SHEETS. EC SHALL VERIFY WITH McDONALD'S PROJECT MANAGER WHICH OPTIONAL EQUIPMENT IS TO BE INCLUDED AND INSTALL OPTIONAL ROUGH-INS AS REQUIRED. PRICING FOR OPTIONAL ROUGH-INS SHALL BE INCLUDED IN BID AND CALLED OUT AS OPTIONAL.

M7. EC SHALL COORDINATE WITH KITCHEN EQUIPMENT SUPPLIER, MECHANICAL CONTRACTOR AND GC FOR FINAL LOCATIONS AND CONNECTION REQUIREMENTS OF ALL EQUIPMENT PRIOR TO INSTALLATION OF ANY CONDUIT AND/OR STUB-UP LOCATIONS.

M8. CEILING MOUNTED ECONOMY OEP BOX IS FURNISHED BY McDONALD'S, AND INSTALLED BY THE GC. CORD AND PLUG SET FURNISHED BY KES AND INSTALLED BY THE EC.

M9. FOR GRILLS, FRYERS, AND ANSUL SYSTEMS, EC SHALL EXTEND CONDUIT AND CONDUCTORS DOWN CHASE OR WALL TO TERMINAL BLOCK MOUNTED ON EQUIPMENT AND MAKE FINAL CONNECTIONS TO TERMINAL BLOCKS.

M10. ALL HOLES IN THE FRONT COUNTER FOR THE POS CORDS AND CABLES SHALL BE LOCATED BY OWNER AND DRILLED BY GC.

M11. ALL ELECTRICAL CONDUCTORS SHALL BE CONNECTED TO RECEPTACLES USING ONLY THE TERMINAL SCREWS. RECEPTACLE BACK WIRE/QUICK CONNECTIONS SHALL NOT BE USED.

M12. EC SHALL PROVIDE 208V HEAT TRACE ON THE FREEZER EVAPORATOR CONDENSATE DRAIN LINE. HEAT TRACE SHALL OPERATE CONTINUOUSLY. EC SHALL WIRE HEAT TRACE TO FREEZER EVAPORATOR POWER SUPPLY. A SEPARATE CIRCUIT FOR HEAT TRACE IS NOT REQUIRED. VERIFY HEAT TRACE REQUIREMENTS WITH EVAPORATOR MANUFACTURER

M13. POWER AND CONTROL CORDS ARE FURNISHED WITH KITCHEN APPLIANCES. THE EC SHALL CONNECT CORD SETS TO APPLIANCES AS REQUIRED.

M14. GC SHALL NOT INSTALL CEILING TILE IN AREAS OF THE BEVERAGE BAR REFRIGERATION LINES AND EQUIPMENT PENETRATION LOCATIONS UNTIL THE LINES HAVE BEEN INSTALLED. THE CEILING TILE INSTALLER SHALL RETURN AND INSTALL THE TILES AFTER THE REFRIGERATION LINES HAVE BEEN INSTALLED AND TESTED.

UTILITIES:

U1. INCOMING SERVICE SHALL BE 208Y/120V, 3 PHASE, 4 WIRE. ANY DEVIATIONS TO THIS SERVICE TYPE SHALL NOT BE PERMITTED UNLESS APPROVED IN WRITING BY McDONALD'S.

U2. THE EC SHALL ARRANGE WITH THE ELECTRIC, TELEPHONE, AND OTHER UTILITY COMPANIES FOR INCOMING SERVICE REQUIREMENTS AND SHALL INCLUDE ALL COSTS IN BASE BID.

U3. THE EC SHALL VERIFY EXACT METHODS AND REQUIREMENTS FOR ELECTRICAL SERVICE WITH LOCAL UTILITY COMPANY. CURRENT TRANSFORMERS SHALL BE INSTALLED OUTSIDE RESTAURANT, LOCATE INSIDE ONLY IF REQUIRED BY UTILITY COMPANY OR LOCAL AUTHORITIES.

U4. PROVIDE CONCRETE PAD IF TRANSFORMER IS LOCATED ON GRADE AND PROVIDE SECONDARY SERVICE FEEDER AND CONDUITS TO PANEL MDP AS PER LOCAL UTILITY REQUIREMENTS.

U5. THE EC/GC/ACM SHALL OBTAIN AVAILABLE SHORT CIRCUIT CURRENT FROM THE LOCAL UTILITY COMPANY. THE EC/GC/ACM SHALL ADVISE IN WRITING (FAX SUPPLIER THE UTILITY LETTER) THE AVAILABLE AMOUNT OF FAULT CURRENT. THE PANELBOARD SUPPLIER SHALL BE RESPONSIBLE TO VERIFY THAT THE ELECTRICAL EQUIPMENT SHIPPED HAS APPROPRIATE ELECTRICAL RATINGS WHICH ARE EQUAL TO OR GREATER THAN THE AVAILABLE AMOUNT OF FAULT CURRENT AT THE SITE.

U6. EC AND ACM OR OWNER/OPERATOR AND ACM SHALL COORDINATE WITH LOCAL PHONE COMPANY TO PROVIDE A 10 PAIR (OR MORE) COPPER TELEPHONE CABLE FROM THE TELEPHONE UTILITY EASEMENT TO THE RESTAURANT TELEPHONE DEMARCATION POINT. IF THE TELEPHONE PANEL/BOX IS LOCATED INSIDE THE RESTAURANT, EC SHALL PROVIDE (2) EMPTY 3/4" CONDUITS FROM THE TELEPHONE PANEL/BOX UP TO ABOVE THE CEILING FOR FUTURE TELEPHONE CABLE INSTALLATION. ADDITIONALLY, THE EC SHALL PROVIDE AN EMPTY 3/4" CONDUIT FROM THE TELEPHONE PANEL/BOX TO THE LOCATION OF THE FUTURE INTERNET SERVER (VERIFY LOCATION WITH PM). EC SHALL CONNECT, INSTALL AND INCORPORATE ALL OTHER REQUIREMENTS NECESSARY FOR COMPLETE AND OPERATIONAL TELEPHONE SYSTEM(S) FOR THIS SITE. THE REMAINING UNUSED TELEPHONE CONDUCTOR PAIRS SHALL BE CAPPED AND LEFT IN PLACE FOR FUTURE USE. THE TELEPHONE PANEL/BOX SHALL BE GROUNDED AS SHOWN IN THE "BUILDING ELECTRICAL GROUNDING DETAIL."

U7. EC SHALL PROVIDE A 4" SCHEDULE 40/80 PVC CONDUIT THAT IS SUITABLE FOR DIRECT BURIAL FROM BUILDING TO UTILITY EASEMENT/ROW IN UTILITY CABLING/CONDUIT TRENCH PROVIDED BY GC. CONDUIT SHALL RUN FROM INCOMING TELCOM LOCATION AT BUILDING TO TELCOM PEDESTAL LOCATION IN UTILITY EASEMENT/ROW. VERIFY EXACT LOCATIONS IN FIELD WITH AREA CONSTRUCTION MANAGER AND TELECOM UTILITY PROVIDER PRIOR TO INSTALLATION.

INSTALLATION NOTES:

1. IF TELCOM CONDUIT IS TERMINATED WITHIN BUILDING, PVC SHALL TRANSITION TO HWG/RMC TYPE CONDUIT PRIOR TO RISING ABOVE FINISHED SLAB.
2. PROVIDE THERMOPLASTIC BUSHINGS AT BOTH ENDS OF CONDUIT FOR CABLING PROTECTION.
3. IF 90 DEGREE BENDS ARE REQUIRED, CONTRACTOR SHALL PROVIDE WIDE SWEEPING BENDS TO PREVENT BENDING/DAMAGE TO CABLE
4. ALL COMMUNICATIONS CABLING SHALL BE PULLED VIA THIS CONDUIT.
5. INSTALL A MINIMUM OF 6 PULL WIRES IN CONDUIT TO ALLOW FOR THE INSTALLATION OF FUTURE CABLING. USE NON-DEGRADING POLYPROPYLENE OR MONOFILAMENT PLASTIC LINE OR #12 AWGT SOLID COPPER CONDUCTORS WITH NOT LESS THAN 200 LBF TENSILE STRENGTH. PROVIDE AT LEAST 12 INCHES OF SLACK AT EACH END OF PULL WIRE.
6. AFTER INSTALLATION OF COMMUNICATIONS CABLING AND PULLSTRINGS/WIRES, CONTRACTOR SHALL SEAL BOTH ENDS OF CONDUIT TO PREVENT INTRUSION FROM WEATHER, RODENTS, DEBRIS, ETC. SEAL SHALL BE OF TYPE TO ALLOW FOR REMOVAL FOR INSTALLATION OF FUTURE CABLING

CONDUIT AND WIRE:

W1. THE FOLLOWING WIRING METHODS SHALL NOT BE USED: NON-METALLIC SHEATHED CABLE (ROMEX, NM, NMC, & NMS), ARMORED CABLE TYPE AC (BX), ELECTRICAL NON-METALLIC TUBING, TYPE ENT (SMURF-TUBE).

W2. CONDUIT RUNS MAY BE COMBINED EXCEPT WHERE ISOLATED GROUNDS ARE USED. IG CIRCUITS SHALL BE RUN IN SEPARATE CONDUITS. ALL HOME RUNS SHALL BE SIZED BASED ON DERATED CONDUCTOR AMPACITIES AND INCREASE CONDUIT AND WIRE SIZE AS REQUIRED BY NEC SECTION 310 REQUIREMENTS.

W3. CONDUIT SHALL HAVE A MAXIMUM OF 4 BENDS WITHOUT A JUNCTION BOX TO PREVENT DAMAGE TO CABLE DURING PULLING. THE EC SHALL PIGTAIL #12 PULL WIRE AT EACH END FOR INSTALLER TO PULL CABLE. ALL LOW VOLTAGE CONDUIT STUB-UPS SHALL BE PROVIDED WITH A BUSHING.

W4. MINIMUM WIRE SIZE SHALL BE #12 AWG COPPER UNLESS NOTED OTHERWISE. MINIMUM CONDUIT SIZE SHALL BE 1/2" UNLESS NOTED OTHERWISE. WIRES INSTALLED UNDERGROUND OR OUTDOORS SHALL BE THW.

W5. CONDUCTORS #10 AWG AND SMALLER SHALL BE SOLID COPPER. CONDUCTORS #8 AND LARGER SHALL BE STRANDED COPPER. ALUMINUM CONDUCTORS SHALL NOT BE UTILIZED FOR FEEDER OR BRANCH CIRCUIT DISTRIBUTION.

W6. RACEWAYS SHALL BE ANY OF THE FOLLOWING MATERIALS, INSTALLED IN ACCORDANCE WITH ALL APPLICABLE CODES:

OUTDOORS: (FOR SPECIFIC APPLICATIONS AND APPROPRIATE FITTINGS, SEE TABLE W6)

1. EXPOSED: RMC, IMC.
2. CONCEALED: RMC, IMC.
3. BELOW GRADE, SINGLE RUN: RNC, RMC.
4. BELOW GRADE, GROUPED: RNC, RMC.
5. CONNECTION TO VIBRATING EQUIPMENT (INCLUDING TRANSFORMERS AND HYDRAULIC, PNEUMATIC, ELECTRIC SOLENOID, OR MOTOR-DRIVEN EQUIPMENT): LFMC.
6. BOXES AND ENCLOSURES: NEMA 250, TYPE 3R OR 4.

INDOORS: (FOR SPECIFIC APPLICATIONS AND APPROPRIATE FITTINGS, SEE TABLE W6)

1. EXPOSED: EMT, IMC.
2. CONCEALED: EMT, IMC.

(CONTINUED ON TOP)

3. CONNECTION TO VIBRATING EQUIPMENT (INCLUDING TRANSFORMERS AND HYDRAULIC, PNEUMATIC, ELECTRIC SOLENOID, OR MOTOR-DRIVEN EQUIPMENT): FMC; EXCEPT USE LFMC IN DAMP OR WET LOCATIONS.
4. DAMP OR WET LOCATIONS: RIGID STEEL CONDUIT.
5. BOXES AND ENCLOSURES: NEMA 250, TYPE 1, EXCEPT AS FOLLOWS: A. DAMP, WET OR KITCHEN LOCATIONS: NEMA 250, TYPE 4, STAINLESS STEEL.

TABLE W6:

LOCATION	208V.	480V.	LOW ENERGY*
EXPOSED			
INDOORS	< 1" EMT COMPRESS. FTGS >1.25" IMC THREADED FTGS	IMC THREADED FTGS	EMT COMPR. FTGS
OUTDOORS	RMC OR IMC THREADED FTGS	RMC OR IMC THREADED FTGS	RMC OR IMC THREADED FTGS
CONCEALED			
WALLS	<2" EMT SET SCREW FTGS >2.5" IMC THREADED FTGS	<2" EMT SET SCREW. FTGS >2.5" IMC THREADED FTGS	EMT 1/2"- 2" SET SCREW FTGS 2.5" – 4" COMPR. FTGS
AIR HANDLING CEILING/SPACE	<2" EMT COMPR. FTGS >2.5" IMC THREADED. FTGS	2" EMT COMPR. FTGS < >2.5" IMC THREADED. FTGS	EMT COMPR. FTGS
NON AIR HANDLING CEILING/SPACE	<2" EMT SET SCREW FTGS >2.5" IMC THREADED. FTGS	<2" EMT COMPR. FTGS >2.5" IMC THREADED. FTGS	EMT 1/2" – 2" SET SCREW FTGS 2.5"– 4" COMPR. FTGS
BELOW GRADE			
INTERIOR	IMC THREADED FTGS OR SCHEDULE 40 OR 80 PVC	IMC THREADED FTGS	IMC THREADED FTGS SCHEDULE 40 OR 80 PVC
EXTERIOR	SCHEDULE 40 OR 80 PVC OR RMC THREADED FTGS	SCHEDULE 40 OR 80 PVC OR RMC THREADED FTGS	SCHEDULE 40 OR 80 PVC OR RMC THREADED FTGS

W7. ALL CONDUITS PENETRATING THE FREEZER/COOLER BOX SHALL BE SEALED IN COMPLIANCE NEC SECTION 300 AND THE FREEZER/COOLER BOX MANUFACTURERS REQUIREMENTS.

W8. PROVIDE THREE (3) 3/4" EMPTY CONDUITS FROM PANEL LP-1 UP TO THE CEILING SPACE AND CAP FOR FUTURE USE.

GROUNDING:

G1. ALL BRANCH AND FEEDER CIRCUITS SHALL BE GROUNDED BY TWO METHODS. THE FIRST METHOD SHALL INCLUDE AN INSULATED COPPER EQUIPMENT GROUNDING CONDUCTOR CONTAINED WITHIN THE SAME CONDUIT AS THE PHASE CIRCUIT CONDUCTORS AND SIZED PER NEC SECTION 250 REQUIREMENTS. THIS INSULATED EQUIPMENT GROUNDING CONDUCTOR SHALL HAVE ONE END PROPERLY TERMINATED AT THE EQUIPMENT GROUND BUS IN THE CORRESPONDING CIRCUIT BREAKER PANEL, AND THE OTHER END TERMINATED AT THE GROUNDING CONTACT OF A GROUNDING RECEPTACLE AND TO THE JUNCTION BOX OR TO AN EQUIPMENT CABINET, AS APPLICABLE. THE SECOND METHOD PROVIDES EQUIPMENT GROUNDING VIA METALLIC CONDUIT THAT IS CONNECTED AND TERMINATED IN FITTINGS LISTED FOR GROUNDING PER NEC SECTION 250 REQUIREMENTS. BOTH GROUNDING METHODS ARE REQUIRED IN A MCDONALD'S RESTAURANT. ISOLATED GROUND SHALL BE INSTALLED WHERE INDICATED ON PLAN AND AS SHOWN IN POS ISOLATED GROUND/DEDICATED CIRCUIT DETAIL ON SHEET E4.2.

G2. THE BUILDING GROUNDING SYSTEM SHALL COMPLY WITH NEC ARTICLE 250, MCDONALD'S SPECIFICATIONS, AND SHEET E4.2. CAUTION: IT IS A SAFETY HAZARD AND AN NEC VIOLATION TO HAVE ANY NEUTRAL TO GROUND CONNECTIONS BEYOND THE MAIN ELECTRICAL DISCONNECT MEANS. MCDONALD'S GROUNDING STANDARDS PURPOSELY EXCEED THOSE GIVEN BY THE NEC. THE EC SHALL PROVIDE A BUILDING GROUNDING SYSTEM MEETING NEC SECTION 250 REQUIREMENTS AS WELL AS MCDONALD'S STANDARDS.

G3. EC SHALL REFER TO "POS ISOLATED GROUND/DEDICATED CIRCUIT DETAIL, SHEET E4.2, FOR REQUIRED WIRING REQUIREMENTS OF COMPUTER PANEL CP.

G4. METAL RACEWAYS CONTAINING A GROUNDING ELECTRODE CONDUCTOR SHALL BE BONDED AT BOTH ENDS AS REQUIRED BY NEC SECTION 250 REQUIREMENTS.

TEMPERATURE CONTROLS:

T1. REMOTE TEMPERATURE SENSORS: EC SHALL PROVIDE 1/2" CONDUIT FROM JUNCTION BOX ABOVE CEILING DOWN TO SENSOR MOUNTED AT 4'-0" TO 4'-6" AFF.

T2. SEE DETAIL ON SHEET M3.0. FOR SENSOR MOUNTING DETAIL. LOCATION OF WALL MOUNTED TEMPERATURE SENSORS ARE SHOWN ON SHEET M1.2 AND E2.0.

T3. WHEN WIRING FOR PROGRAMMABLE THERMOSTATS AND REMOTE SENSORS IS NOT IN A CONDUIT, THE WIRING SHALL BE RUN TO THE UNDERSIDE OF THE ROOF DECK. NONE OF THE WIRING SHALL BE ROUTED OVER FLUORESCENT BALLASTS, POWER BOXES OR IN A CONDUIT WITH LINE VOLTAGE WIRING AS ELECTRICAL INTERFERENCE (NOISE) WILL CAUSE ERRATIC CONTROL OPERATION. ALL THERMOSTATS SHALL BE MOUNTED 4'-0" AFF.

FLAT PANEL TELEVISIONS:

TV1. EC SHALL PROVIDE A DUPLEX RECEPTACLE AND A LOW VOLTAGE BROADBAND CONNECTION FOR THE INSTALLATION OF FLAT PANEL TELEVISIONS. COORDINATE EXACT LOCATIONS WITH DECOR COMPANY. FOR BROADBAND CONNECTION, EC SHALL PROVIDE A 4 X 4 BOX WITH A 3/4" CONDUIT STUB-UP WITH A BUSHING INTO ACCESSIBLE CEILING SPACE.

ELECTRICAL PANELS:

E1. THE EC SHALL BE RESPONSIBLE FOR BALANCING THE LOADS ON ALL PANELS.

E2. THE EC SHALL PROVIDE ELECTRICAL SERVICE TO THE EQUIPMENT MOUNTED BREAKER PANEL. SEE ELECTRICAL ROUGH-IN PLAN AND SCHEDULE FOR ALL REQUIREMENTS.

E3. THE EC SHALL BE RESPONSIBLE FOR THE PROPER IDENTIFICATION AND LABELING OF ALL CIRCUIT BREAKERS. EACH PANEL SHALL BE PROVIDED WITH AN ACCURATE TYPEWRITTEN CIRCUIT DIRECTORY AT THE CONCLUSION OF THE PROJECT AND PRIOR TO RESTAURANT OPENING.

SECURITY AND DRIVE-THRU CAMERAS:

S1. EC TO PROVIDE ELECTRICAL POWER AND COMMUNICATION CONDUITS FOR BUILDING MOUNTED SECURITY AND DRIVE THRU CAMERAS. COORDINATE FINAL LOCATIONS WITH SECURITY AND DRIVE THRU CAMERA INSTALLERS.

LIGHTING:

L1. PROVIDE A WEATHERPROOF JUNCTION BOX IN PARAPET FOR FASCIA SIGN. FINAL CONNECTION BY OTHERS.

L2. COORDINATE THE LOCATION OF JUNCTION BOX (IN THE WALL) WITH THE OPENING IN TRELLIS (FOR THE LIGHT FIXTURE WIRES). THE LOCATION OF THE JUNCTION BOX AND THE OPENING IN THE TRELLIS SHALL BE ALIGNED FOR THE LIGHT FIXTURE TO BE INSTALLED PROPERLY. COORDINATE INSTALLATION OF JUNCTION BOX AND ANY NECESSARY OPENINGS IN TRELLIS WITH GC AND TRELLIS/CANOPY MANUFACTURER. SEE LIGHT FIXTURE INSTALLATION INSTRUCTIONS FOR REQUIREMENTS REGARDING MOUNTING BRACKETS FOR USE IN C-CHANNEL TRELLISES.

L3. EC SHALL FIELD VERIFY THAT LIGHT FIXTURES DO NOT OBSTRUCT OR CONFLICT WITH THE WORK OF OTHER TRADES. IF A DISCREPANCY IS FOUND, THE EC SHALL IMMEDIATELY NOTIFY THE GC BEFORE THE THE INSTALLATION OF SUCH FIXTURE(S). EC SHALL COORDINATE LOCATIONS OF ALL LIGHT FIXTURES IN DINING AREA WITH FINAL SEATING AND DECOR PLANS.

L4. IF PC-POS CASH REGISTER SYSTEM IS INSTALLED, EC SHALL RELOCATE FIXTURES ABOVE FRONT COUNTER TO AVOID GLARE ON THE CASH REGISTER SCREENS. EC SHALL INSTALL CABLE WHIP TO FIXTURES SO THAT FIXTURE MAY BE RELOCATED FOUR FEET WITHOUT DISCONNECTING CABLE WHIP.

L5. EC SHALL COORDINATE LOCATION OF ALL EXTERIOR LIGHTS TO AVOID INTERFERENCE WITH ANY CORBELS, TRUSSES, BEAMS OR OTHER SPECIAL EXTERIOR TREATMENTS. INSTALL LIGHT FIXTURES WITH CORRECT ORIENTATION PER MANUFACTURER'S INSTRUCTIONS

L6. THE USE OF INTERLOCK TYPE "MC" CABLE IN LENGTHS OF 6 FEET OR LESS (WHERE PERMITTED BY LOCAL CODES) SHALL BE ALLOWED FOR WIRING TO INTERIOR LIGHTING FIXTURES. "ROMEX" OR "BX" SHALL NOT BE USED.

L7. EC SHALL VERIFY THAT NOT MORE THAN 3% VOLTAGE DROP EXISTS FROM THE LIGHTING PANEL TO ANY EXTERIOR LIGHTING FIXTURE OR SIGNAGE BALLAST.

L8. WHERE MCDONALD'S RESTAURANT HAS A PLAYPLACE, THE EC SHALL COORDINATE EXACT LOCATION OF PLAYPLACE LIGHTING WITH PLAYPLACE TOY VENDOR FOR MAXIMUM ILLUMINATION AND SAFETY PER THE FINAL LOCATION OF THE PLAYPLACE TOY. LIGHTING FIXTURES SHALL NOT BE MOUNTED TO THE TOY OR ANY PART OF THE TOY STRUCTURE.

L9. EC SHALL VERIFY ALL TAP SETTINGS FOR H.I.D. LIGHTING FIXTURES AND MAKE ANY NECESSARY CORRECTIONS PRIOR TO INSTALLATION.

REV	DATE	DESCRIPTION	BY
-	-	-	-
-	-	-	-
-	-	-	-
-	12/03/20	SERVICE AREA OPTIMIZATION	WLW
1	11/13/20	USRD SAO SET REVIEW	WLW
2	05/05/20	CIVIL & PLAN REVIEW COMMENTS	WLW
-	01/23/20	PERMIT SET	WLW
-	01/13/20	USRD PROGRESS SET REVIEW	WLW

emanuelson-podas consulting engineers
Emanuelson-Podas, Inc.
705 Bush Lake Road
Excelsior, MN 55331
(952) 930-0050 | www.epinc.com
3801.0037

MATTHEW W. PODAS LICENSED 17667 KANSAS PROFESSIONAL ENGINEER
12/03/20

PREPARED BY:

© 2020 McDonald's USA, LLC

PREPARED FOR: McDonald's USA, LLC

These drawings and specifications are the confidential and proprietary property of McDonald's USA, LLC and shall not be copied or reproduced without written authorization. The contract documents were prepared for use on this specific site in conjunction with its issue date and are incomplete without the latest revision. Any use or reuse of these drawings for reference or example on another project requires the services of properly licensed architects and engineers. Reproduction of the contract documents for reuse on another project is not authorized.

DRAWN BY	REVIEWED BY	PROJECT MANAGER
MRL	WLW	WLW
STD ISSUE DATE 2019_11	DATE ISSUED 01-23-20	RO#19175

TITLE: 2019 STANDARD BUILDING – BB20
4597F10-WOOD/WOOD

DESCRIPTION: WOOD BEARING WALLS W/FIBER CEMENT SIDING & CI
WOOD ROOF TRUSS FRAMING
FIBER CEMENT PANEL/BATTEN/ALPOLIC PANEL/BRICK EXT. FINISH

SITE ID: 015-0071
SITE ADDRESS: 605 SOUTH 7TH STREET, KANSAS CITY, KS

SHEET NO.: 015-0071.00.B
E3.1
NOTES & DETAILS

SEQUENCE OF OPERATION:

1. TURNING "ON" ANY PIECE OF COOKING EQUIPMENT UNDER A HOOD WILL TURN ON THE EXHAUST FAN FOR THAT HOOD.
2. TURNING "OFF" THE LAST PIECE OF COOKING EQUIPMENT UNDER A HOOD WILL TURN OFF THE EXHAUST FAN FOR THAT HOOD.
3. IF THE ANSUL SYSTEM SHOULD DISCHARGE WHILE THE COOKING EQUIPMENT AND EXHAUST FAN ARE OPERATING, THE COOKING EQUIPMENT WILL BE SHUT OFF, BUT THE EXHAUST FAN WILL CONTINUE TO RUN AND WILL FORCE THE ROOFTOP UNITS INTO A "SCHEDULED" MODE (CONTROLLED BY THE THERMOSTAT).
4. THE ANSUL SYSTEM MUST BE RECHARGED AND MANUALLY RESET BEFORE THE COOKING EQUIPMENT WILL AGAIN BE ABLE TO OPERATE.
5. THE ON/OFF SWITCH ON THE EXHAUST FAN IS NORMALLY KEPT IN THE "ON" POSITION. IF IT IS TURNED OFF FOR SERVICE, THE COOKING EQUIPMENT WILL TURN OFF AND NOT BE ABLE TO OPERATE UNTIL THE EXHAUST FAN ON/OFF SWITCH IS AGAIN TURNED ON.

INTERLOCK DIAGRAM LEGEND

- TERMINAL BLOCK IN CHASE
- CTB – CHASE TERMINAL BLOCK. PROVIDED AND INSTALLED BY KITCHEN EQUIPMENT SUPPLIER
- ETB – EQUIPMENT TERMINAL BLOCK
- EFCR – EXHAUST FAN / MAKE UP AIR CONTROL RELAY. PROVIDED BY CONTRACTOR.
- IGR – INTERNAL GRILL RELAY PROVIDED WITHIN GARLAND GRILLS
- MS – ANSUL MICROSWITCH PROVIDED BY KITCHEN EQUIPMENT SUPPLIER
- CONTROL CORD PLUG & RECEPTACLE
- FIELD WIRING
- CONTROL CORD/INTERNAL WIRING
- FACTORY WIRING
- EQUIPMENT OR ENCLOSURE

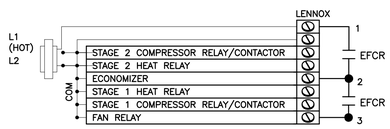

TYPICAL HVAC UNIT
VERIFY EXACT REQUIREMENTS ON FIELD

COOKING EQUIPMENT EXHAUST FAN	MAKE UP PROVIDED BY
EF/1	RTU–3
EF/2	RTU–1
EF/3	RTU–2

NOTE
RTU # ASSOCIATED WITH EACH EXHAUST FAN BASED ON PROTOTYPICAL VALUES ONLY. VERIFY THAT EXHAUST FAN ACTIVATES THE CORRESPONDING RTU TO PROVIDE AN ADEQUATE AMOUNT OF MAKEUP AIR.

1 / E-3.2 **MAKE-UP AIR HVAC CONNECTION**
FOR REFERENCE ONLY

REVISED: 6/18

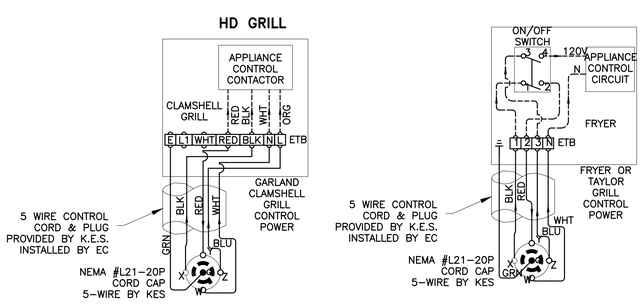

4 / E-3.2 **CONTROL CORD CONNECTION**
FOR REFERENCE ONLY

REVISED: 6/18

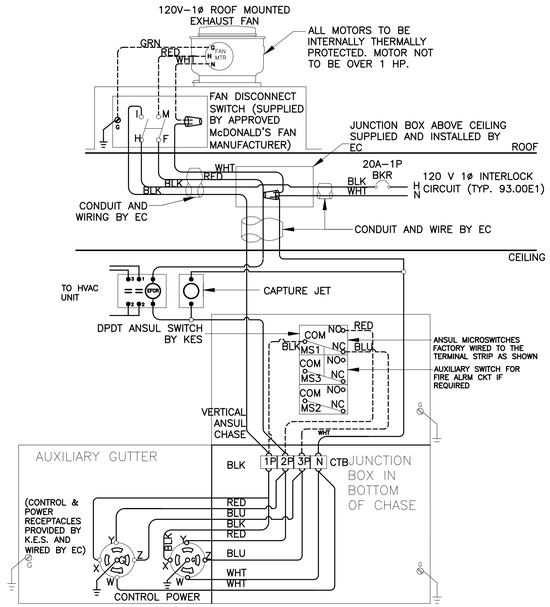

2 / E-3.2 **INTERLOCK WIRING DIAGRAM FOR EXHAUST FAN AND COOKING EQUIPMENT**
FOR REFERENCE ONLY

REVISED: 6/18

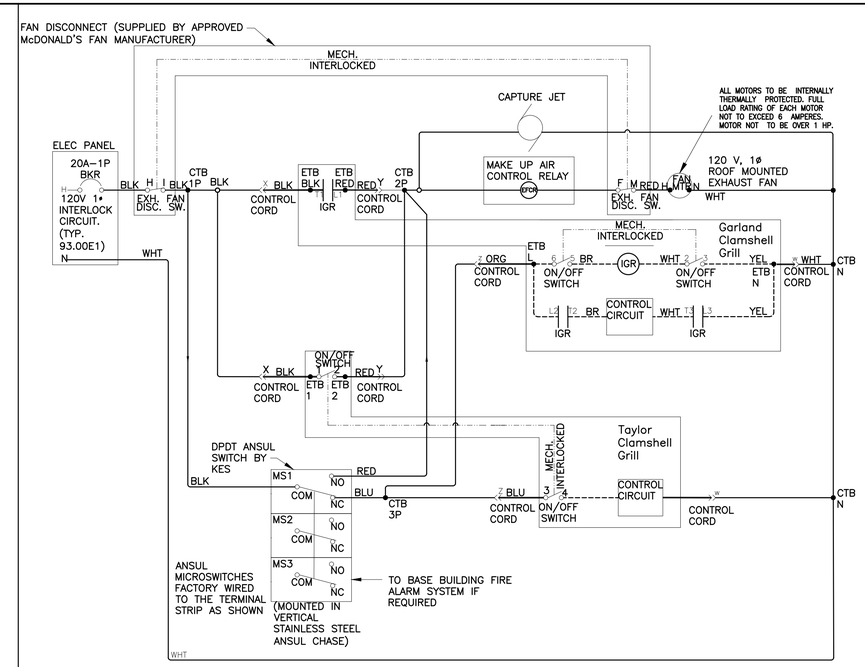

3 / E-3.2 **INTERLOCK LADDER DIAGRAM**
FOR REFERENCE ONLY

REVISED: 6/18

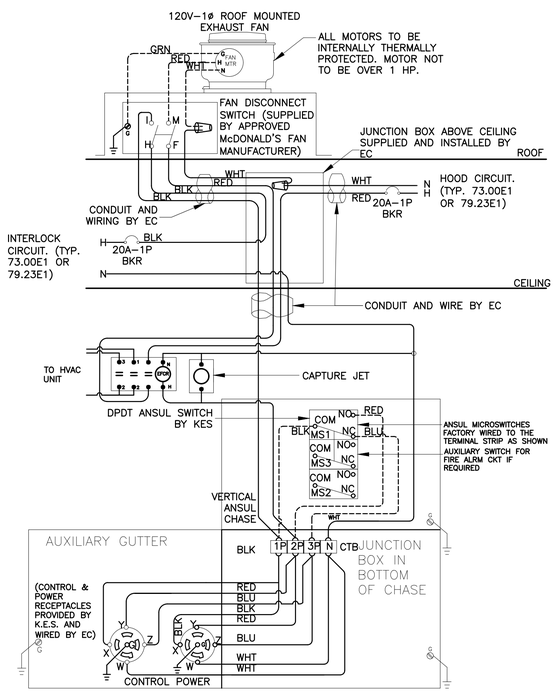

5 / E-3.2 **INTERLOCK WIRING DIAGRAM FOR EXHAUST FAN AND COOKING EQUIPMENT**
FOR REFERENCE ONLY

REVISED: 6/18

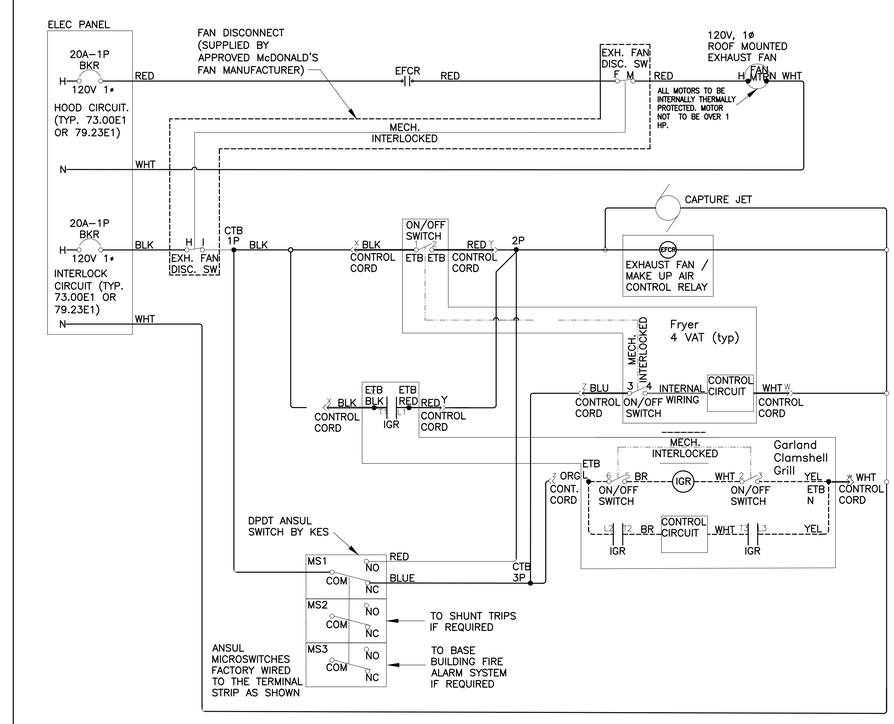

6 / E-3.2 **INTERLOCK LADDER DIAGRAM**
FOR REFERENCE ONLY

REVISED: 6/18

REV	DATE	DESCRIPTION	BY
-	01/23/20	PERMIT SET	WLW
-	01/13/20	USRD PROGRESS SET REVIEW	WLW

emanuelson-podas consulting engineers
Emanuelson-Podas, Inc.
705 Bush Lake Road
Eden Prairie, MN 55347
(952) 930-0050 | www.epinc.com
3801.0037

MICHAEL WEBERT LICENSED 17648 KANSAS PROFESSIONAL ENGINEER

01/23/20

PREPARED BY:

© 2020 McDonald's USA, LLC

PREPARED FOR: McDonald's USA, LLC

These drawings and specifications are the confidential and proprietary property of McDonald's USA, LLC and shall not be copied or reproduced without written authorization. The contract documents were prepared for use on this specific site in conjunction with its issue date and are fitted to site specific conditions. Use of, or reliance upon, all or portions of these drawings for reference or example on another project requires the services of properly licensed architects and engineers. Reproduction of the contract documents for reuse on another project is not authorized.

DRAWN BY	STD ISSUE DATE	REVIEWED BY	DATE ISSUED
WRW	2019_11	WLW	01-23-20

TITLE: 2019 STANDARD BUILDING – BB20
4597F10–WOOD/WOOD

DESCRIPTION: WOOD BEARING WALLS W/FIBER CEMENT SIDING & CI WOOD ROOF TRUSS FRAMING FIBER CEMENT PANEL/BATTEN/ALPOLIC PANEL/BRICK EXT. FINISH

SITE ID: 015–0071 | SITE ADDRESS: 605 SOUTH 7TH STREET, KANSAS CITY, KS | RD#19175

SHEET NO. 015–0071.00.0
E3.2
WIRING DETAILS

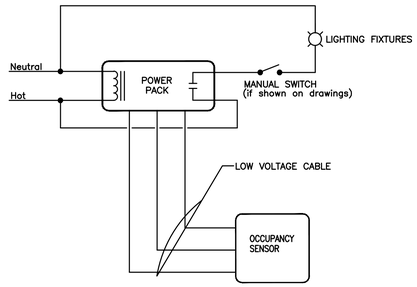

NOTES:

1. REFER TO LIGHTING PLAN FOR OCCUPANCY SENSOR LOCATIONS AND QUANTITIES.

1 / E-4.0 OCCUPANCY SENSOR CONTROL DETAIL
NOT TO SCALE

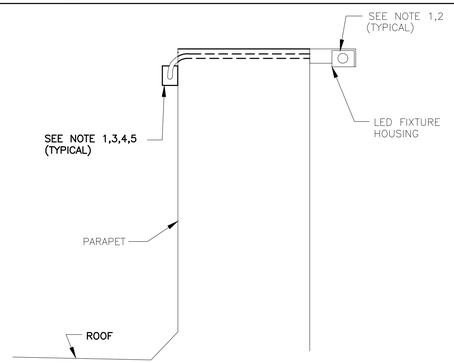

3 / E-4.0 BRAND WALL LIGHTING DETAIL
NOT TO SCALE

GENERAL NOTES

1. PLACE LED FIXTURE AT DESIRED LOCATION AND INSTALL FIXTURE FROM LEFT TO RIGHT WHEN FACING ARCADE AND ATTACH POWER SUPPLY AND MOUNTING BRACKET AS RECOMMENDED BY MANUFACTURER.
2. EC SHALL CONNECT NEW FIXTURES TO THE NEXT AVAILABLE SPARE 120V CIRCUIT AND MAKE ALL ELECTRICAL CONNECTIONS AS REQUIRED FOR A COMPLETE OPERATING SYSTEM.
3. POWER SUPPLY SHALL ALWAYS BE INSTALLED TO THE LEFT SIDE OF FIXTURE WHEN FACING ARCADE.
4. OVERALL FIXTURE RUN TO BE CENTERED ON OVERALL LENGTH OF WALL.
5. CONNECT NEW LED FIXTURES TO EXISTING LIGHTING CIRCUIT(S) AS REQUIRED. ENSURE THAT CIRCUIT BREAKER AND CONDUCTOR SIZES DO NOT EXCEED 1200 WATTS ON A 15A CIRCUIT AND 1600 WATTS ON A 20A CIRCUIT. VERIFY EXISTING CONDITIONS AND REQUIREMENTS IN FIELD. PROVIDE ADDITIONAL CIRCUITS (C.B.,WIRING,CONDUITS) AS REQUIRED.

CONDUIT, WIRE SIZE AND GROUNDING FOR HVAC UNITS

HACR BRKR SIZE	CONDUIT & WIRE SIZE
40A	1"C–3#8
45A	1"C–3#6
50A	1"C–3#6
60A	1"C–3#6
70A	1–1/4"C–3#4
80A	1–1/4"C–3#3
90A	1–1/4"C–3#3
100A	1–1/4"C–3#2
125A	1–1/2"C–3#1
150A	1–1/2"C–3#1/0
175A	2"C–3#2/0
200A	2"C–3#3/0
225A	2"C–3#4/0
250A	2–1/2"C–3#250

THE CONTRACTOR SHALL BE RESPONSIBLE FOR FINAL COORDINATION OF ALL ELECTRICAL FEEDERS AND CIRCUIT BREAKERS WITH THE MANUFACTURER'S WRITTEN DATA FOR EACH MECHANICAL DEVICE PRIOR TO SUBMITTAL OF ANY ELECTRICAL EQUIPMENT FOR REVIEW. NO ADDITIONAL COMPENSATION WILL BE ALLOWED FOR ANY CHANGES TO ELECTRICAL FEEDERS OR CIRCUIT BREAKERS REQUIRED FOR ANY MECHANICAL DEVICES.

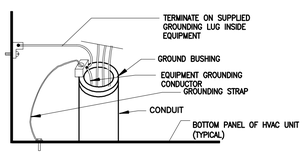

4 / E-4.0 HVAC GROUNDING DETAIL
NOT TO SCALE

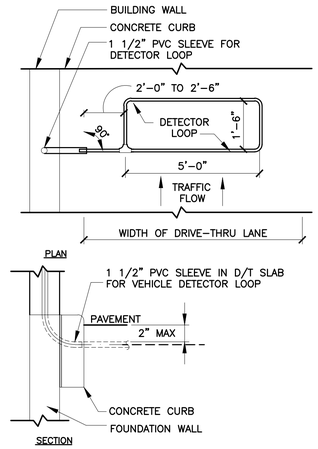

B – DT WINDOW DETECTOR LOOP

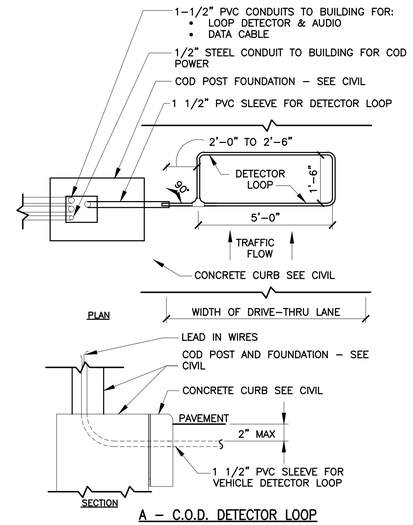

A – C.O.D. DETECTOR LOOP

2 / E-4.0 DETECTOR LOOP DETAILS
NOT TO SCALE

NOTES

1. VERIFY CONDUIT SIZES AND LAYOUT WITH DETECTOR LOOP MANUFACTURER.
2. CENTER VEHICLE DETECTOR LOOP (ITEM # 217.11E1) IN DRIVE THRU LANE. INSTALL PER MFR. RECOMMENDATIONS.
3. SEE CIVIL FOR DIMENSIONS OF DRIVE–THRU LANE CONCRETE PAD FOR DETECTOR LOOP.
4. NO STEEL (REBAR OR ELECTRICAL WIRE) SHALL BE USED WITHIN 2' OF LOOP.
5. DETECTOR LOOP MANUFACTURERS:
   DETECTOR LOOPS MAY BE BY ONE OF THE FOLLOWINGS COMPANIES OR EQUAL.
   3M: 1–800–328–0033
   HME: 1–800–848–4468
6. DETECTOR LOOP MATERIAL:
   PVC TUBING 1/2" I.D. 100 PSI LOOP MADE FROM ONE LENGTH OF THIN FOURTEEN GAUGE STRANDED WIRE. LEAD–IN IS PRE–TWISTED AT FACTORY.
7. DETECTOR LOOP CONSTRUCTION:
   FORMED WITH ONE CONTINUOUS LENGTH OF PVC WITH NO SHARP CORNERS AS DETAILED. WIRE LOOPED, FORMED, & PIGTAILED AS DETAILED.

PB = Pullbox
JB = Junction Box
EC = Electrical Contractor
VIF = Verify In Field

ELECTRICAL SCHEDULE

TAG #	QTY	DESCRIPTION	VOLT/PH	FLA	BRK SIZE	COND/WIRE	PNL/CCT	RECEP TYPE	HGT AFF	REQUIREMENTS & REMARKS
004.30E3	1	MENU BOARD – DIGITAL	120/1 ISOLATED	5.3	20A	–	REUSE EXISTING	(2) 5352	SEE PLAN	SEE LAYOUT FOR GANGED OUTLET CONFIGURATION
004.21E1	1	MENU BOARD – DIGITAL – MEDIA PLAYER	120/1 ISOLATED	1.0	20A	–	REUSE EXISTING	(2) 5352	SEE PLAN	SEE LAYOUT FOR GANGED OUTLET CONFIGURATION
216.05E9	1	ORB MONITOR	120/1 ISOLATED	1.36A	20A	–	REUSE EXISTING	(1) 5747D	SEE PLAN	SEE LAYOUT FOR GANGED OUTLET CONFIGURATION

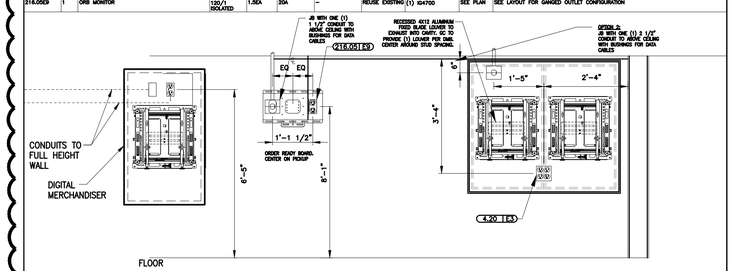

NOTE: OPTION 1 IS PREFERRED IF AREA BEHIND BOARDS IS A NON–CUSTOMER AREA AND MEDIA PLAYERS WON'T BE INSTALLED ABOVE FOOD PREP. SLEEVES SHOULD NOT BE INSTALLED WITHIN CUSTOMER VIEW. IF AREA BEHIND MENU BOARDS IS DINING, RESTROOMS, OR OTHER CUSTOMER–FACING LOCATION, USE OPTION 2.

3 / E-4.0 RECESSED MENU BOARDS
NOT TO SCALE

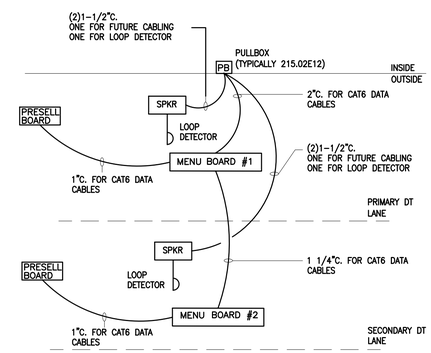

DT LOW VOLTAGE CONDUIT DIAGRAM
NOT TO SCALE

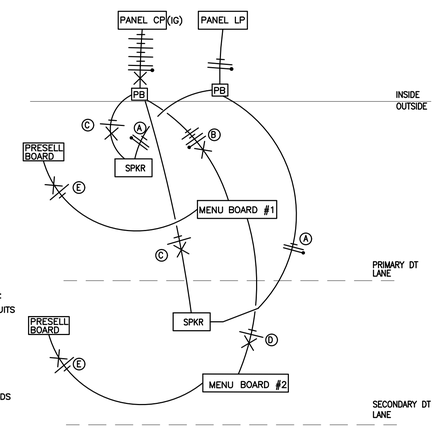

DRIVE THRU POWER DIAGRAM
NOT TO SCALE

NOTE:

* VERIFY EXACT CIRCUITS & QUANTITIES OF CIRCUITS WITH PANEL SCHEDULES AND MANUFACTURERS INSTALLATION INSTRUCTIONS.

(A) 2#12 & 1#12 GND. TO LP–1 FOR COD CANOPY LIGHTING.

(B) 4#12 & 1#12 GND & 1#12 ISOLATED GND., TO CP FOR ISOLATED GROUND POWER TO MENUBOARDS AND MEDIA PLAYERS.

(C) 2#12 & 1#12 GND & 1#12 ISOLATED GND., TO CP FOR ISOLATED GROUND POWER TO SPEAKER CANOPY/STAND. EACH CANOPY/STAND SHALL BE ON ITS OWN SEPARATE CIRCUIT.

(D) 2#12 & 1#12 GND & 1#12 ISOLATED GND., TO CP FOR ISOLATED GROUND POWER TO MENUBOARDS AND MEDIA PLAYERS.

(E) 2#12 & 1#12 GND & 1#12 ISOLATED GND., TO CP FOR ISOLATED GROUND POWER TO FOR PRESELL BOARDS AND MEDIA PLAYER.

REV	DATE	DESCRIPTION	BY
-	-	-	-
-	-	-	-
-	-	-	-
A	12/03/20	SERVICE AREA OPTIMIZATION	WLW
-	11/13/20	USRD SAO SET REVIEW	WLW
A	05/05/20	CIVIL & PLAN REVIEW COMMENTS	WLW
-	01/23/20	PERMIT SET	WLW
-	01/13/20	USRD PROGRESS SET REVIEW	WLW

emanuelson-podas consulting engineers
Emanuelson-Podas, Inc.
7705 Bush Lake Road
Edina, MN 55439
(952) 930-0050 | www.epinc.com

3801.0037

MATTHEW W. LILLY LICENSED 17667 KANSAS PROFESSIONAL ENGINEER

12/03/20

PREPARED BY:

PREPARED FOR: McDonald's USA, LLC

©2020 McDonald's USA, LLC
There drawings and specifications are the confidential and proprietary property of McDonald's USA, LLC and shall not be copied or reproduced without written authorization. The contract documents were prepared for use on this specific site in conjunction with its issue date and are not suitable for use on other projects or locations. Use of these drawings for reference or example on another project requires services of properly licensed architects and engineers. Reproduction of the contract documents for reuse on another project is not authorized.

DRAWN BY: MRL
STD ISSUE DATE 2019_11
REVIEWED BY: WLW
DATE ISSUED 01–23–20
RQ#19175

TITLE: 2019 STANDARD BUILDING – BB20
4597F10–WOOD/WOOD

DESCRIPTION: WOOD BEARING WALLS W/FIBER CEMENT SIDING & CI
WOOD ROOF TRUSS FRAMING
FIBER CEMENT PANEL/BATTEN/ALPOLIC PANEL/BRICK EXT. FINISH

SITE ID: 015–0071
SITE ADDRESS: 605 SOUTH 7TH STREET, KANSAS CITY, KS

SHEET NO. 015–0071.00.B
E4.0
WIRING DETAILS

LIGHTING CONTROL SYSTEM

INTERIOR CUSTOMER LIGHTING

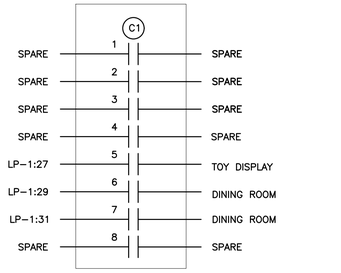

INTERIOR CREW LIGHTING

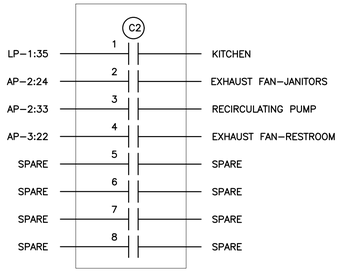

BUILDING FACADE

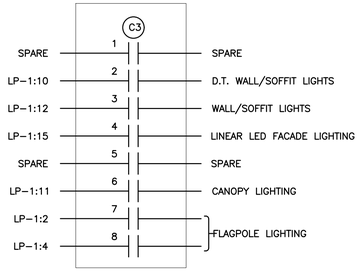

EXTERIOR LIGHTING

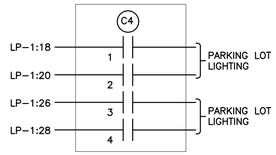

EXTERIOR LIGHTING

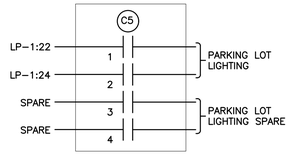

EXTERIOR SIGNAGE

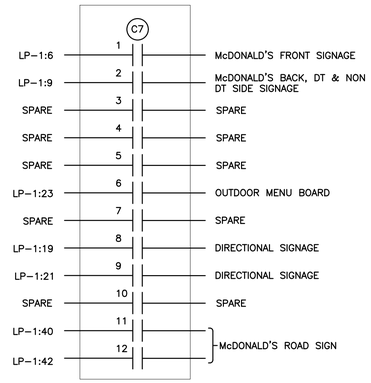

LIGHTING CONTROL NOTES:

LIGHTING CONTROL NOTES

LC1. CONTACTOR DETAILS ARE DIAGRAMMATIC ONLY AND ARE SHOWN WITH TYPICAL LOADS AND CIRCUIT ASSIGNMENTS. LOADS, CIRCUIT ASSIGNMENTS AND NUMBER OF CONTACTORS MAY VARY BY RESTAURANT LOCATION AND PER EMS SUPPLIERS SYSTEMS. VERIFY EXACT REQUIREMENTS WITH EMS INSTALLATION DETAILS, SITE PLANS, ELECTRICAL PANEL SCHEDULES AND ACM. EC SHALL MAKE ALL MODIFICATIONS AS REQUIRED. FINAL INSTALLATION SHALL BE FULLY NEC AND ENERGY CODE COMPLIANT.

LC2. ELECTRICAL CONTRACTOR SHALL FURNISH AND INSTALL ALL WIRING, CONNECTIONS, TERMINATIONS, ETC. THAT ARE NOT PROVIDED BY THE EMS SUPPLIER FOR A COMPLETE, FULLY OPERATIONAL AND CODE COMPLIANT LIGHTING CONTROL SYSTEM.

LC3. ALL COMPONENTS FOR THIS LIGHTING CONTROL SYSTEM SHALL BE INSTALLED BY THE ELECTRICAL CONTRACTOR. SEE BOXED NOTE BELOW FOR OPTIONS.

LC4. ALL COMPONENTS SHALL BE UL LISTED AND LABELED AND THE SYSTEM SHALL COMPLY WITH ALL LOCAL, STATE AND FEDERAL ENERGY CODE REQUIREMENTS.

LC5. ALL CONTACTORS SHALL BE LOCATED IN A NEMA 1 ENCLOSURE WITH SCREW TYPE COVER MOUNTED DIRECTLY ABOVE LIGHTING PANEL OR SWITCHGEAR SO AS TO BE ACCESSIBLE.

LC6. ALL CONTACTORS SHALL BE RATED FOR 30 AMP LOADS UNLESS NOTED OTHERWISE AND SHALL BE HID RATED WHERE REQUIRED.

LC7. COIL VOLTAGES FOR ALL CONTACTORS SHALL BE 120 VOLT UNLESS NOTED OTHERWISE.

LIGHTING CONTROL INSTALLATION OPTIONS

OPTION 1 (STANDARD) CONTACTORS AND CONTACTOR ENCLOSURE FOR THIS LIGHTING CONTROL SYSTEM SHALL BE FURNISHED BY THE EMS SUPPLIER AND INSTALLED BY THE ELECTRICAL CONTRACTOR ON SITE FOR A COMPLETE AND FULLY FUNCTIONAL SYSTEM.

OPTION 2 (OPTIONAL) LIGHTING CONTROL CAN BE ACCOMPLISHED VIA UTILIZATION OF A SMART TYPE BREAKER PANEL REPLACING STANDARD PANEL LP-1. PANEL SHALL UTILIZE AN INTEGRAL MOTOR OPERATED CIRCUIT BREAKERS OR AN INTEGRAL CIRCUIT BREAKER/CONTACTOR TYPE COMBINATION DEVICE WITH AN INTEGRAL PROGRAMMING CONTROL MODULE AND SHALL BE ORDERED THROUGH OUR ELECTRICAL EQUIPMENT NATIONAL ACCOUNT PROGRAM (SIEMENS OR SQUARE-D) THROUGH OUR CONSTRUCTION PURCHASING TEAM.

BUILDING AUTOMATION SYSTEM NOTES

BAS1. THE DIAGRAM SHOWN ABOVE IS SCHEMATIC IN NATURE AND SHOWS THE GENERAL REQUIREMENTS FOR THE INSTALLATION OF THE BUILDING AUTOMATION SYSTEM. EXACT EQUIPMENT REQUIREMENTS AND QUANTITIES WILL VARY PER SITE. G.C., M.C., T.C.C. AND E.C. SHALL COORDINATE ALL EXACT EQUIPMENT AND INSTALLATION REQUIREMENTS WITH SUPPLIER PRIOR TO SUBMITTING BID FOR A COMPLETE AND FULLY FUNCTIONAL SYSTEM.

BAS2. THE BUILDING AUTOMATION SYSTEM ALSO HAS ADDITIONAL OPTIONS AVAILABLE SUCH AS MONITORING DOOR CONTACTS (RESTROOM & COOLER FREEZER), ENERGY METER, COOLER/FREEZER TEMP. ADDITIONAL OPTIONS MAY BE SELECTED ON CENTRAL PURCHASING PROJECT DETAIL FORM. G.C., M.C., T.C.C. AND E.C. SHALL COORDINATE ALL EXACT INSTALLATION REQUIREMENTS WITH SUPPLIER PRIOR TO SUBMITTING BID FOR A COMPLETE AND FULLY FUNCTIONAL SYSTEM.

BAS3. ELECTRICAL CONTRACTOR SHALL FURNISH AND INSTALL ALL LINE AND LOW VOLTAGE WIRING AND CONNECTIONS, INCLUDING BUT NOT LIMITED TO CONTROL POWER TO ALL BAS COMPONENTS AND POWER CIRCUITRY WIRING OF ALL LIGHTING CONTACTORS. COORDINATE INSTALLATION WITH SITE SPECIFIC BAS INSTALLATION DETAILS PROVIDED BY SUPPLIER.

BUILDING AUTOMATION SYSTEM

INSTALLATION & TECHNICAL ASSISTANCE INFORMATION:
LENNOX BAS: McD@CCBAC.com

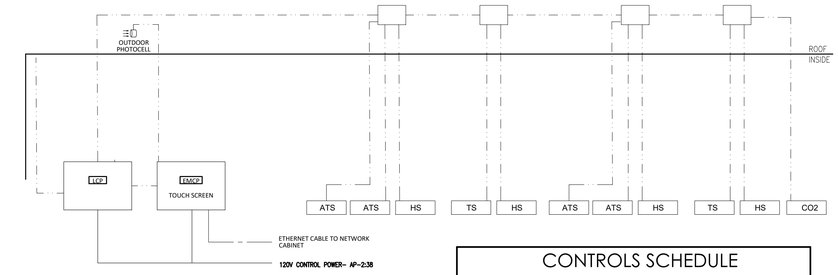

PROVIDE AND INSTALL DATA OUTLET NEXT TO BAS PANEL. REMOTE COMMISSIONING IS NOT POSSIBLE WITHOUT DATA CONNECTION.

INSTALLATION NOTES:

1. PROVIDE, INSTALL AND SECURE ALL NECESSARY CABLE & CONDUIT PER BAS DRAWINGS AND SPECIFICATIONS.
2. MOUNT ALL BAS CONTROL ENCLOSURES.
3. PERFORM ALL LOW VOLTAGE TERMINATIONS.
4. ROUGH-IN, INSTALLATION AND WIRING FOR TEMPERATURE SENSORS AND TOUCHSCREEN PER PLAN LOCATIONS.
5. PROVIDE POWER CIRCUITS INTO CONTROL CANS PER BAS DETAILS.
6. COORDINATE WITH SUPPLIER TO SCHEDULE REMOTE COMMISSIONING.
7. CORRECT ALL PUNCH LIST ITEMS FOUND DURING REMOTE COMMISSIONING.

CONTROLS SCHEDULE

MARK	DESCRIPTION	MANUFACTURER MODEL
TS	TEMPERATURE SENSOR	*PROVIDED WITH BAS
ATS	AVERAGING TEMPERATURE SENSOR	*PROVIDED WITH BAS
HS	HUMIDITY SENSOR	*PROVIDED WITH BAS

NOTES:
1. FOR TS, HS AND ATS LOCATIONS, REFER TO M1.2

WIRE LEGEND

MARK	WIRE/CABLE TYPE
—— – ——	CAT 5E
— · · —	18 AWG CONDUCTORS

INSTALLATION & TECHNICAL ASSISTANCE INFORMATION:
TRANE BAS: McDcontrols@Trane.com

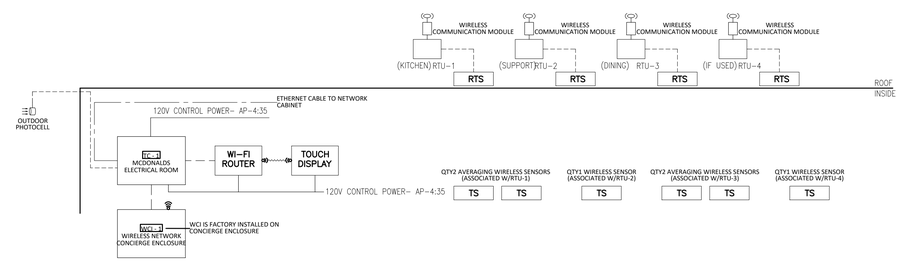

PROVIDE AND INSTALL DATA OUTLET NEXT TO BAS PANEL. REMOTE COMMISSIONING IS NOT POSSIBLE WITHOUT DATA CONNECTION.

INSTALLATION NOTES:

1. PROVIDE, INSTALL AND SECURE ALL NECESSARY CABLE & CONDUIT PER BAS DRAWINGS AND SPECIFICATIONS.
2. MOUNT ALL BAS CONTROL ENCLOSURES.
3. PERFORM ALL LOW VOLTAGE TERMINATIONS.
4. ROUGH-IN, INSTALLATION AND WIRING FOR TEMPERATURE SENSORS AND TOUCHSCREEN PER PLAN LOCATIONS.
5. PROVIDE POWER CIRCUITS INTO CONTROL CANS PER BAS DETAILS.
6. COORDINATE WITH SUPPLIER TO SCHEDULE REMOTE COMMISSIONING.
7. CORRECT ALL PUNCH LIST ITEMS FOUND DURING REMOTE COMMISSIONING.

CONTROLS SCHEDULE

MARK	DESCRIPTION	MANUFACTURER MODEL
TS	WIRELESS SPACE TEMPERATURE SENSOR	*PROVIDED WITH BAS
RTS	RETURN TEMPERATURE SENSOR	*PROVIDED WITH BAS
HS	OUTDOOR TEMP/HUMIDITY SENSOR	FACTORY FURNISHED AND INSTALLED W/EACH RTU

NOTES:
1. FOR TS LOCATIONS, REFER TO M1.2
2. RTS TO BE MOUNTED IN RETURN AIR DUCT OF RTU

WIRE LEGEND

MARK	WIRE/CABLE TYPE
—— – ——	CAT 5E
— · · —	18 AWG CONDUCTORS

REV	DATE	DESCRIPTION	BY
-	01/23/20	PERMIT SET	WLW
-	01/13/20	USRD PROGRESS SET REVIEW	WLW

emanuelson-podas consulting engineers
Emanuelson-Podas, Inc.
7705 Bush Lake Road
Edina, MN 55439
(952) 930-0050 | www.epinc.com

3801.0037

MICHAEL WEBERT LICENSED 17648 KANSAS PROFESSIONAL ENGINEER

PREPARED BY: 01/23/20

© 2020 McDonald's USA, LLC

PREPARED FOR: McDonald's USA, LLC

These drawings and specifications are the confidential and proprietary property of McDonald's USA, LLC and shall not be copied or reproduced without written authorization. The contract documents were prepared for use on this specific site in conjunction with its issue date and are intended for the bidding and construction of a McDonald's restaurant. Use of these drawings for reference or example on another project requires the services of properly licensed architects and engineers. Reproduction of the contract documents for reuse on another project is not authorized.

DRAWN BY	REVIEWED BY	PREPARED BY
MRW	WLW	

STD ISSUE	DATE	DATE ISSUED
2019_11	01-23-20	

TITLE: 2019 STANDARD BUILDING – BB20 4597F10-WOOD/WOOD

DESCRIPTION: WOOD BEARING WALLS W/FIBER CEMENT SIDING & CI WOOD ROOF TRUSS FRAMING FIBER CEMENT PANEL/BATTEN/ALPOLIC PANEL/BRICK EXT. FINISH

SITE ID: 015-0071

SITE ADDRESS: 605 SOUTH 7TH STREET, KANSAS CITY, KS

RQ#19175

SHEET NO. 015-0071.00.0 E4.1 LIGHTING CONTROLS

MLO, AIC: NOTES D6, D7, & D8, Mounting: MDP, NEMA — PANEL AP-1 — 225A, 208Y/120 VAC, 3PH, 4W, CB TYPE: BL or BLH

WATTS A	WATTS B	WATTS C	DESCRIPTION	BRKR REQ	TRP PLS	CCT NO.	CCT NO.	TRIP PLS	BRKR REQ	DESCRIPTION	WATTS A	WATTS B	WATTS C
1632			DCO - General Purpose	G	20A-1	1	2	20A-2	G	Coffee brewer (presenter's booth)	1612		
	720		DCO - General Purpose	G	20A-1	3	4	I	I	I		1612	
		1200	DCO - General Purpose	G	20A-1	5	6	20A-1	G	ABS (phase c, presenter's booth)			1788
120			Safe - (mo) DCO Gen Purp	L	20A-1	7	8	20A-1	G	OJ dispenser/Coffee Cream Disp	1668		
	240		Remote Order Battery	G	20A-1	9	10	20A-1	G	DCO - General Purpose		450	
		1140	Merge/audio sys/drv mon(sa)	G	20A-1	11	12	20A-1	G	Automated beverage sys (abs,pb)			600
960			Washer	G	15A-1	13	14	20A-2	G	Coffee Brewer (front counter)	1612		
	1800		Hand held Order	G	20A-1	15	16	I	I	I		1612	
		120	Computer Room (TF/1)	G	20A-1	17	18	30A-3	G	Heat treat combo shake (frnt cntr)			1560
2246			Espresso Brewer	G	30A-2	19	20	I	I	I	1560		
	2246		I	I	I	21	22	I	I	I		1560	
		1500	3-Vat fryer exhst hd interlock	G	20A-1	23	24	20A-1	G	3-Vat fryer exhst hd interlock			1176
1200			Reach in Freezer-SW	G	20A-1	25	26	20A-2	H	Ice Machine Remote Condensor	104		
	1080		Frozen fry dispenser (fry wall)	G	20A-1	27	28	I	I	I		104	
		2112	4-Vat fryer exhst hd interlock	G	20A-1	29	30	20A-1	G	Reach in Freezer-SW			1200
1884			Fry bagging station 36" (fry wall)	L,G	20A-1	31	32	15A-3	H	Ice Machine Remote Cond	1224		
	60		Hand Wash Timer	G	20A-1	33	34	I	I	I		1224	
		1200	Reach in Freezer-SW	G	20A-1	35	36	I	I	I			1224
132			Ice machine - 1000 lb	G	15A-1	37	38	15A-3	H	Ice Machine Remote Cond	1224		
	132		Ice machine - 1000 lb	G	15A-1	39	40	I	I	I		1224	
		1656	4-Vat fryer exhst hd interlock	G	20A-1	41	42						1224
										Total Connect	17178	14064	17700
										Connect Amps		136	Amps
										Demand Amps		98	Amps

MLO, AIC: NOTES D6,D7,&D8, Mounting: MDP, NEMA 1 — PANEL AP-2 — 225A, 208Y/120 VAC, 3PH, 4W, CB TYPE: BL or BLH

WATTS A	WATTS B	WATTS C	DESCRIPTION	BRKR REQ	TRP PLS	CCT NO.	CCT NO.	TRIP PLS	BRKR REQ	DESCRIPTION	WATTS A	WATTS B	WATTS C
1536			Ice machine 1400LB	H	20A-3	1	2	20A-1	G	Refrigerator - Single Wide	684		
	1536		I	I	I	3	4	20A-1	G	Janitor EF		100	
		1536	I	I	I	5	6	20A-1	G	DCO - General Purpose			1080
624			Soda tower-cold plate(self serv)	G	20A-1	7	8	20A-1		Spare			
	180		Janitor's closet	G	20A-1	9	10	20A-2	H	Trash Compactor		2496	
			Spare	L	20A-1	11	12	I	I	I			2496
1848			Hot Water Dispenser	G	20A-1	13	14	20A-1	G	Walk in cooler / freezer	1200		
	864		Bulk oil system (sup area)	G	20A-1	15	16	20A-1	G	Walk in cooler / freezer		1200	
		1668	Clm gril exhast hd interlock	G	20A-1	17	18	20A-2	G	Q'ing oven - P& S			1550
840			Meat freezer	G	20A-1	19	20	I	I	I	1550		
	120		Clean in place panel	G	20A-1	21	22	20A-1	G	Specialty Coffee Refrigerator		468	
		490	Reverse Osmosis, Filtration	G	20A-1	23	24	20A-1	G	Compressed Air System			1260
180			DCO in Trash Corral	G	20A-1	25	26	20A-1	G	Refrig-wt-48"	600		
	1200		Bulk oil sys - support area (sa)	G	20A-1	27	28	20A-2	G	Q'ing oven - P& S		1550	
		1032	BIC Machine	G	20A-1	29	30	I	I	I			1550
684			Refrigerator - Single Wide	G	20A-1	31	32	20A-2	G	Iced Tea Brewer	1352		
	120		Recirc pump	G	20A-1	33	34	I	I	I		1352	
		1632	Soda syst pack (support area)	G	20A-1	35	36	20A-1	G	DCO - General Purpose			480
3120			Soda syst pack (support area)	G	30A-3	37	38	20A-1		BAS Controller	360		
	3120		I	I	I	39	40	20A-1		Spare			
		3120	I	I	I	41	42	20A-1	G	DCO - gen purpose			540
										Total Connect	14578	14306	18433
										Connect Amps		131	Amps
										Demand Amps		92	Amps

MLO, AIC: NOTES D6,D7,&D8, Mounting: MDP, NEMA 1 — PANEL AP-3 — 225A, 208Y/120 VAC, 3PH, 4W, CB TYPE: BL or BLH

WATTS A	WATTS B	WATTS C	DESCRIPTION	BRKR REQ	TRP PLS	CCT NO.	CCT NO.	TRIP- PLS	BRKR REQ	DESCRIPTION	WATTS A	WATTS B	WATTS C
600			Baked Goods Display Case		15A-1	1	2	50A-3	G	3 - Vat LOV Fryer - Elec. - F/F/F	4668		
			Universal Radiant Toaster	G	30A-2	3	4	I	I	I		4668	
		2621	I	I	I	5	6	I	I	I			4668
1140			Hand Dryer	L,G	20A-1	7	8	50A-3	G	3 - Vat LOV Fryer - Elec. - F/F/F	4668		
	1140		Hand Dryer	L,G	20A-1	9	10	I	I	I		4668	
		1140	Hand Dryer	L,G	20A-1	11	12	I	I	I			4668
1140			Hand Dryer	G	20A-1	13	14	50A-3	G	3 - Vat LOV Fryer - Elec. - F/F/F	4668		
	360		Refrigerator/freezer 2 drwr	L,G	20A-1	15	16	I	I	I		4668	
		384	Refrigerator 2 Drawer	G	20A-1	17	18	I	I	I			4668
384			Refrigerator 2 Drawer	G	20A-1	19	20	20A-1		Spare			
	120		DCO-Satellite Music System		20A-1	21	22	20A-1		Toilet Exhaust Fan		864	
			Spare		20A-1	23	24	20A-1	G	Roof receptacles			540
1368			WareWasher	G	20A-1	25	26	20A-2	G	Coffee Brewer (Glass Decanter)	1612		
	1656		Bulk Oil System	G	20A-1	27	28	I	I	I		1612	
		120	D.T. Window Power		15A-1	29	30	20A-1		Clg. Mt window recepts			720
4000			Unit AC-1		50A-2	31	32	50A-2		Unit AC-2	4000		
	4000		I		I	33	34	I		I		4000	
		1200	Unit AC-3		20A-1	35	36	20A-1	G	Spare			
1200			Unit AC-4		20A-1	37	38	20A-1	G	Prep Table	840		
	660		Unit AC-5		20A-1	39	40	20A-1	G	Wall MT freezer SW		600	
		120	D.T. Window Power		20A-1	41	42	20A-1		D.T. Window Power			120
										Total Connect	30288	29016	20969
										Connect Amps		223	Amps
										Demand Amps		157	Amps

* If a prince castle toaster is used, EC to coordinate correct circuit with KES supplied cordset.

MLO, AIC: NOTES D6,D7,&D8, Mounting: MDP, NEMA 1 — PANEL AP-4 — 225A, 208Y/120 VAC, 3PH, 4W, CB TYPE: BL or BLH

WATTS A	WATTS B	WATTS C	DESCRIPTION	BRKR REQ	TRP PLS	CCT NO.	CCT NO.	TRIP- PLS	BRKR REQ	DESCRIPTION	WATTS A	WATTS B	WATTS C
2604			3 - Platen Clamshell Grill	G	50A-3	1	2	50A-3	G	3 - Platen Clamshell Grill	2604		
	2604		I	I	I	3	4	I	I	I		2604	
		2604	I	I	I	5	6	I	I	I			2604
5196			3 - Platen Clamshell Grill	G	50A-3	7	8	50A-3	G	3 - Platen Clamshell Grill	5196		
	5196		I	I	I	9	10	I	I	I		5196	
		5196	I	I	I	11	12	I	I	I			5196
1602			Q'ing oven - P& S	G	20A-2	13	14	15A-1	G	Ventless Hood Combi	960		
	1602		I	I	I	15	16	15A-1	G	Ventless Hood Combi		960	
		2080	Frozen Beverage Dispenser	G	30A-2	17	18	20A-1	G	Finishing Station			960
2080			I	I	I	19	20	30A-3	G	Combi Oven	1047		
	180		McDelivery Center		20A-1	21	22	I	I	I		1047	
					20A-1	23	24	I	I	I			1047
					20A-1	25	26	30A-3	G	Combi Oven	1047		
			Space			27	28	I	I	I		1047	
			Space			29	30	I	I	I			1047
			Space			31	32	20A-1		Spare			
			Space			33	34	20A-1		Spare			
			Space			35	36	20A-1		Spare			
			Space			37	38	20A-1	G	Spare			
			Space			39	40	20A-1		Spare			
			Space			41	42	20A-1		Spare			
										Total Connect	22335	20435	20734
										Connect Amps		176	Amps
										Demand Amps		118	Amps

MLO, AIC: NOTES D6,D7,&D8, Mounting: MDP, NEMA 1 — PANEL AP-5 — 225A, 208Y/120 VAC, 3PH, 4W, CB TYPE: BL or BLH

WATTS A	WATTS B	WATTS C	DESCRIPTION	BRKR REQ	TRP PLS	CCT NO.	CCT NO.	TRIP- PLS	BRKR REQ	DESCRIPTION	WATTS A	WATTS B	WATTS C
			Spare		20A-1	1	2	20A-1	G	Chilled Rail	192		
	1477		Universal Holding Cabinet - 2S	G	20A-2	3	4	20A-1	G	Pie Display		564	
		1477	I	I	I	5	6	20A-1	G	Pie Display			564
1477			Universal Holding Cabinet - 2S	G	20A-2	7	8	50A-3	G	4 - Vat LOV Fryer - Elec. S/S/S	4668		
	1477		I	I	I	9	10	I	I	I		4668	
		240	UHC Table Hub and Spoke	G	20A-1	11	12	I	I	I			4668
			Spare		20A-1	13	14	50A-3	G	4 - Vat LOV Fryer - Elec. S/S/S	4668		
	1477		Universal Holding Cabinet - 2S	G	20A-2	15	16	I	I	I		4668	
		1477	I	I	I	17	18	I	I	I			4668
			Spare		20A-1	19	20	50A-3	G	4 - Vat LOV Fryer - Elec. S/S/S	4668		
			Spare		20A-1	21	22	I	I	I		4668	
			Space			23	24	I	I	I			4668
			Space			25	26	50A-3	G	4 - Vat LOV Fryer - Elec. S/S/S	4668		
			Space			27	28	I	I	I		4668	
			Space			29	30	I	I	I			4668
			Space			31	32	20A-1		Spare			
			Space			33	34	20A-1		Spare			
			Space			35	36	20A-1		Spare			
			Space			37	38			Space			
			Space			39	40			Space			
			Space			41	42			Space			
										Total Connect	20341	23666	22430
										Connect Amps		185	Amps
										Demand Amps		120	Amps

MLO, AIC: NOTES D6,D7,&D8, Mounting: flush, NEMA 1 — PANEL LP-1 — 225A, 208Y/120 VAC, 3PH, 4W, CB TYPE: BL or BLH

WATTS A	WATTS B	WATTS C	DESCRIPTION	BRKR REQ	TRIP POLES	CCT NO.	CCT NO.	TRIP POLES	BRKR REQ	DESCRIPTION	WATTS A	WATTS B	WATTS C
			Spare		20A-1	1	2	20A-1	S	Flag Pole	220		
			Spare		20A-1	3	4	20A-1		Spare			
			Spare		20A-1	5	6	20A-1	S	Front Signage			294
100			Trash Corral Lighting	S	20A-1	7	8	20A-1		Spare			
	294		Back, DT & Non DT Signage	S	20A-1	9	10	20A-1	S	Exterior Wall/Soffit Lights		114	
		193	Flood Lights & Canopy lights	S	20A-1	11	12	20A-1	S	Exterior Wall/Soffit Lights			132
			Spare		20A-1	13	14	20A-1		DCO in Roall Sign Base	180		
	86		Linear LED Façade Lighting	S	20A-1	15	16	20A-1	S,L	Security Ltg\Dr Alarm\CO2		524	
			Spare	S	20A-1	17	18	30A-2		Lot Lights			480
96			Directional Sign	S	20A-1	19	20	I		I	480		
	96		Directional Sign	S	20A-1	21	22	30A-2		Lot Lights		240	
		120	COD Lighting	S	20A-1	23	24	I	I	I			240
			Spare		20A-1	25	26	30A-2		Lot Lights	480		
	30		Toy Display	S	20A-1	27	28	I	I	I		480	
		232	Dining Area Lighting	S	20A-1	29	30	30A-2		Spare			
180			Dining Area Lighting	S	20A-1	31	32	I	I	I			
			Spare	S	15A-1	33	34	20A-1		Spare			
		596	Kitchen Lighting	S	20A-1	35	36	20A-1		Spare			
108			Restroom Lighting	S	20A-1	37	38	20A-1	S,L	Night/Ltg./Emerg. LED Lighting	179		
	368		Support Area Lighting	S	20A-1	39	40	30A-2	S	Mcd'S Road Sign		2496	
		460	Night/Exit/Emerg. Ltg.	S,L	20A-1	41	42	I	I	I			2496
										Total Connect	2023	4728	5243
										Connect Amps		33	Amps
										Demand Amps		42	Amps

100 MLO AIC:SEE NOTES D6, D7, & D8, Mounting: Flush — COMPUTER PANEL — 100A, 208Y/120 VAC, 3PH, 4W, CB TYPE: BL or BLH

WATTS A	WATTS B	WATTS C	DESCRIPTION	BRKR REQ	TRP PLS	CCT NO.	CCT NO.	TRIP- PLS	BRKR REQ	DESCRIPTION	WATTS A	WATTS B	WATTS C
1236			POS/Reg/Mon/Printer	L	20A-1	1	2	20A-1	L	Wayport/Pos video monitor	180		
	1764		Pos -Kvs Mon./Rec Prntr/Video Monitor	L	20A-1	3	4	20A-1	L	Pos & ORB monitor,scanner / Rec Printer/Table locator		1056	
		100	CCTV/Timer		20A-1	5	6	20A-1	L	Menu Board-Digital			864
390			Coin Disp/POS-Hrdwr/timer/Vid	L	20A-1	7	8	20A-1	L	Pos-Pc Pres. Booth /Video Mon.	300		
	180		POS- Video Monitor		20A-1	9	10	20A-1	L	LCD Televisions		720	
		600	Technology rack	L	20A-1	11	12	20A-1	L	Tech. rack/Pos Frt Counter			360
180			McCafew Menu Board		20A-1	13	14	20A-1	L	COD #1, POS optical isolator	120		
	1200		Tech rack	L	20A-1	15	16	20A-1	L	Pos Crew Room/Cashless Train		1800	
		1440	Tech rack	L	20A-1	17	18	20A-1	L	COD #2			120
1080			Pos PC front counter	L	20A-1	19	20	20A-1	L	Office desk	1200		
	312		Table Locator System	L	20A-1	21	22	20A-1	L	Office desk		1200	
		60	Time Clock	L	20A-1	23	24	20A-1	L	Crew Video			360
1860			Exterior Menu Board	L	20A-1	25	26	20A-1	L	POS video monitor	300		
	1860		Exterior Menu Board	L	20A-1	27	28	20A-1	L	Kiosks		672	
		360	Zoom Timer	L	20A-1	29	30	20A-1	L	Kiosks			672
			Spare	L	20A-1	31	32	20A-1	L	Spare			
			Spare	L	20A-1	33	34	20A-1	L	Spare			
			Spare	L	20A-1	35	36	20A-1	L	Spare			
			Spare	L	20A-1	37	38	20A-1	L	Spare			
			Spare	L	20A-1	39	40	20A-1	L	Spare			
			Spare	L	20A-1	41	42	20A-1	L	Spare			
										Total Connect	6846	10764	4936
										Connect Amps		63	Amps
										Demand Amps		63	Amps

1000A MCB, NOTES D6, D7, & D8, Mounting: Free Standing, NEMA 1 — PANEL MDP — 208Y/120 VAC, 3PH, 4W

WATTS A	WATTS B	WATTS C	DESCRIPTION	BRKR REQ	BRKR REQ	TRP PLS	CCT NO.	CCT NO.	TRP PLS	BRKR REQ	BRKR TYPE	DESCRIPTION	WATTS A	WATTS B	WATTS C
2023	4728	5243	Lighting Panel 1; LP-1			225A-3	1	2	225A-3			Appliance Panel; AP-1	17178	14064	17700
14578	14306	18433	Appliance Panel; AP-2			225A-3	3	4	225A-3	SHT		Appliance Panel; AP-3	30288	29016	20969
7405	6529	5897	KEC Breaker Panel			225A-3	5	6	100A-3	L		CP Panel	6846	10764	4936
17520	17520	17520	*Roof Top Unit 1	H		175A-3	7	8	225A-3	H		*Roof Top Unit 3	24120	24120	24120
20341	23666	22430	Appliance Panel; AP-5	SHT		225A-3	9	10	225A-3	SHT		Appliance Panel; AP-4	22335	20435	20734
4920	4920	4920	Remote Condensing Unit			50A-3	11	12	50A-3	H		*Roof top unit 2	5880	5880	5880
			Space				13	14	200A-3			Water Heater	18000	18000	18000
			Space				15	16				Space			
			Space				17	18				SPD			
			Space				19	20				SPD			
												Total Connect	191434	193949	186781
												Connect Amps		1588	Amps

* SEE ELECT SHTS FOR CONDUIT AND WIRE SIZE

POS & COD ISOLATED GROUND/DEDICATED CIRCUIT

● SHOWS CONNECTION/BONDING POINT

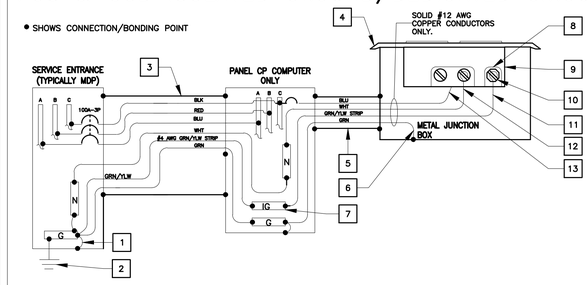

KEY NOTES

1. THIS IS THE ONLY POINT WHERE THE ISOLATED EQUIPMENT GROUNDING CONDUCTOR SHALL BE CONNECTED TO THE BUILDING'S GROUNDING SYSTEM.
2. SEE BUILDING GROUNDING DETAIL THIS SHEET.
3. 1-1/2" METAL CONDUIT: 1-#1 CU + 1-#6 CU EQUIP GND + 1-#4 CU ISOLATED GND.
4. ALL ISOLATED GROUND/ DEDICATED CIRCUIT RECEPTACLE COVER PLATES SHALL BE ORANGE HUBBELL PJ7CO (SINGLE), PJ8CO (ONE DUPLEX) OR PJ82CO (TWO DUPLEX) MARKED "COMPUTER ONLY".
5. METAL CONDUIT SHALL CONTAIN ONLY P.O.S. CIRCUIT CONDUCTORS (DEDICATED CIRCUIT). ONLY USE RIGID NON-METALLIC CONDUIT BELOW GRADE WHEN REQUIRED BY LOCAL CODE.
6. EQUIPMENT GROUNDING BONDING CONDUCTOR (TYPICAL)
7. ISOLATED GROUND BUS, ELECTRICALLY INSULATED FROM PANEL ENCLOSURE USED TO TERMINATE ONLY ISOLATED EQUIPMENT GROUNDING CONDUCTORS.
8. ALL CONDUCTORS SHALL BE SOLID COPPER AND TERMINATED TO THEIR APPROPRIATE TERMINAL SCREWS BY WRAPPING THE CONDUCTOR COMPLETELY AROUND THE SCREW BARREL AND TIGHTENING THE SCREW PER MANUFACTURER'S TORQUE SPECIFICATIONS.
9. ISOLATED GROUND RECEPTACLE HUBBELL-IG4700,IG4710,IG5262 OR IG5261. SEE ROUGH IN SCHEDULE FOR THE APPROPRIATE RECEPTACLE TO USE.
10. ISOLATED GREEN GROUND SCREW.
11. ISOLATED EQUIPMENT GROUNDING CONDUCTOR (GRN W/YLW STRIP)
12. NEUTRAL CONDUCTOR TERMINATED ON SILVER SCREW.
13. PHASE CONDUCTOR TERMINATED ON BRASS SCREW

NOTES

1. ALL P.O.S. EQUIPMENT (COMPUTERS,PRINTERS,MONITORS KVS, MODEM, HUB & COD) SHALL BE POWERED FROM THE COMPUTER PANEL.

   ALL OTHER COMPUTER/DIGITAL EQUIPMENT SHALL BE POWERED FROM PHASE "A" IN THE COMPUTER PANEL.
2. ISOLATED GROUND INSTALLATION SHALL COMPLY WITH THE REQUIREMENTS OF NEC SECTION 250 .
3. EACH 20 AMP CIRCUIT SHALL HAVE IT'S OWN ISOLATED EQUIPMENT GROUNDING CONDUCTOR.
4. ENTIRE GROUNDING SYSTEM SHALL COMPLY WITH NEC ARTICLE 250 AND MCDONALD's BUILDING GROUNDING DETAIL.
5. EC SHALL VERIFY CORRECT POLARITY AT RECEPTACLE.
6. EC SHALL VERIFY THAT SUBPANEL CP DOES NOT CONTAIN ANY ILLEGAL NEUTRAL TO GROUND BONDS.
7. PANEL CP SHALL ONLY BE USED TO POWER SENSITIVE ELECTRONIC EQUIPMENT, AS OUTLINED IN NOTE #1. IT SHALL NOT BE USED TO POWER ANY OTHER LOADS.
8. IT IS A SAFETY HAZARD AND AN NEC VIOLATION FOR THE POS SYSTEM TO HAVE ITS OWN INDEPENDENT GROUNDING ROD. IF AN INDEPENDENT GROUND ROD IS FOUND FOR THE POS SYSTEM, IT SHALL BE BONDED TO THE BUILDING GROUNDING SYSTEM.

SINGLE LINE RISER DIAGRAM

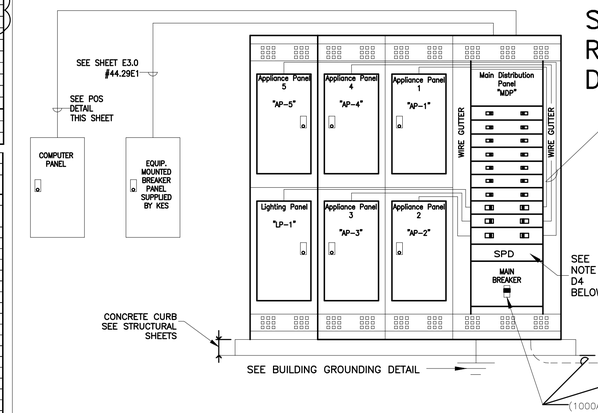

BUILDING ELECTRICAL GROUNDING DETAIL

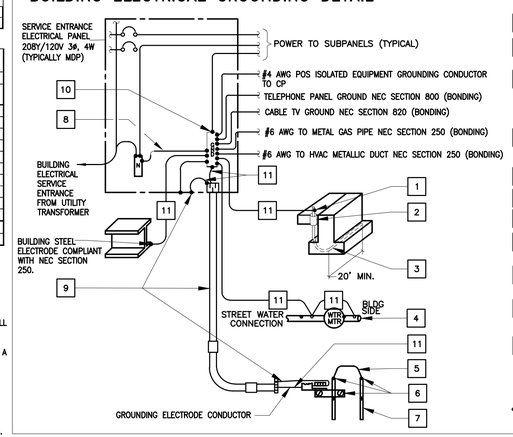

KEY NOTES

1. PROVIDE ENOUGH LENGTH TO TERMINATE DIRECTLY TO GROUND BUS OR USE BOLTED-TYPE CONNECTION DEVICE OR EXOTHERMIC WELD.
2. NON-METALLIC PROTECTIVE SLEEVE. LOCATE SLEEVE DIRECTLY UNDER THE ELECTRICAL SERVICE ENTRANCE PANEL. EC TO PROVIDE PLIABLE SEALANT BETWEEN COPPER WIRE AND SLEEVE.
3. FOR NEW CONSTRUCTION WHEN A SPREAD FOOTING OR DOWN TURNED SLAB IS USED, EC SHALL INSTALL A CONCRETE ENCASED ELECTRODE, COMPLIANT WITH NEC SECTION 250, CONSISTING OF AT LEAST 20 FEET OF BARE #4 AWG COPPER ENCASED IN 2 INCHES OF CONCRETE NEAR THE BOTTOM OF THE FOOTING OR FOUNDATION (BELOW GRADE) THAT IS IN DIRECT CONTACT WITH EARTH.
4. METAL UNDERGROUND WATER PIPE ELECTRODE COMPLIANT WITH NEC SECTION 250. THE GROUNDING CONNECTION TO THE INTERIOR METAL WATER PIPE SHALL BE MADE WITHIN THE FIRST FIVE FEET OF THE WATER PIPE ENTRANCE TO THE BUILDING.
5. IF MULTIPLE GROUNDING RODS ARE BEING USED OR NEED TO BE USED, THEY SHALL ALL BE BONDED TOGETHER PER NEC SECTION 250.
6. CLAMPS SUITABLE FOR DIRECT BURIAL OR EXOTHERMIC WELD.
7. 8'-0" X 5/8" CU ROD GROUNDING ELECTRODE COMPLIANT WITH NEC SECTION 250.
8. CU BONDING JUMPER SIZED PER NEC SECTION 250 OR FACTORY PROVIDED NEUTRAL TO GROUND BAR LINK. (THIS IS THE ONLY PLACE IN THE BUILDING WHERE N-G SHALL BE BONDED TOGETHER)
9. ALL METAL RACEWAYS CONTAINING GROUNDING ELECTRODE CONDUCTORS SHALL BE BONDED AT BOTH ENDS AS REQUIRED BY NEC SECTION 250. PROVIDE GROUNDING TYPE BUSHINGS & FITTINGS.
10. MCDONALD'S GROUNDING STANDARDS PURPOSELY EXCEED THOSE GIVEN BY THE NEC. THE ELECTRICAL CONTRACTOR SHALL PROVIDE A BUILDING GROUNDING SYSTEM MEETING NEC AND MCDONALD'S STANDARDS AS SHOWN ON THIS DRAWING.
11. CU GROUNDING ELECTRODE CONDUCTORS AND BONDING JUMPERS SHALL BE SIZED BASED UPON ELECTRICAL SERVICE SIZE PER NEC SECTION 250

800A	1000A	1200A
3/0 CU	3/0 CU	4/0 CU

* SHOWS CONNECTION/BONDING POINT

DISTRIBUTION EQUIPMENT NOTES:

D1. ALL ELECTRICAL MATERIAL USED ON THIS PROJECT SHALL BE "UL" LISTED AND LABELED.

D2. THE EC/GC/AREA CONSTRUCTION MANAGER WHEN ORDERING PANELBOARDS, SHALL DETERMINE THE NUMBER OF SERVICE ENTRANCE CONDUCTORS, SIZE AND MATERIAL TYPE, AND SHALL PROVIDE THIS INFORMATION TO THE PANELBOARD SUPPLIER SO THAT THE APPROPRIATE LUGS CAN BE PROVIDED FROM THE FACTORY.

D3. ALUMINUM SERVICE ENTRANCE CONDUCTORS SHALL ONLY BE USED WHEN THEY ARE TERMINATED DIRECTLY TO THE LINE LUGS ON A C/T AND METERING CABINET. THE LINE LUGS OF A FUSIBLE DISCONNECT SWITCH OR TO THE LINE LUGS OF A MAIN LUG ONLY (6 HANDLE RULE) SERVICE ENTRANCE PANEL. ALUMINUM SERVICE ENTRANCE CONDUCTORS SHALL NOT BE TERMINATED TO THE LINE LUGS OF ANY MAIN BREAKER SINCE DOING SO WILL VIOLATE IT'S 100% UL RATING. IF ALUMINUM CONDUCTORS ARE USED AS PREVIOUSLY INDICATED THEY SHALL BE TERMINATED AS FOLLOWS, AND THE WIRE SIZE INCREASED DUE TO LOWER AMPACITY OF ALUMINUM. EXPOSED ALUMINUM CONDUCTOR STRANDS SHALL BE COATED WITH AN ANTI-OXIDANT IMMEDIATELY AFTER INSULATION IS STRIPPED AWAY. A COMPRESSION LUG SHALL BE PROPERLY INSTALLED ONTO THE EXPOSED ALUMINUM CONDUCTOR STRANDS, AND THAT COMPRESSION LUG SHALL THEN BE BOLTED TO THE TRANSFORMER TAPS AND SWITCHBOARD BUSS USING PROPERLY SIZED BOLTS, NUTS AND WASHERS. MERELY INSERTING ALUMINUM STRANDS UND

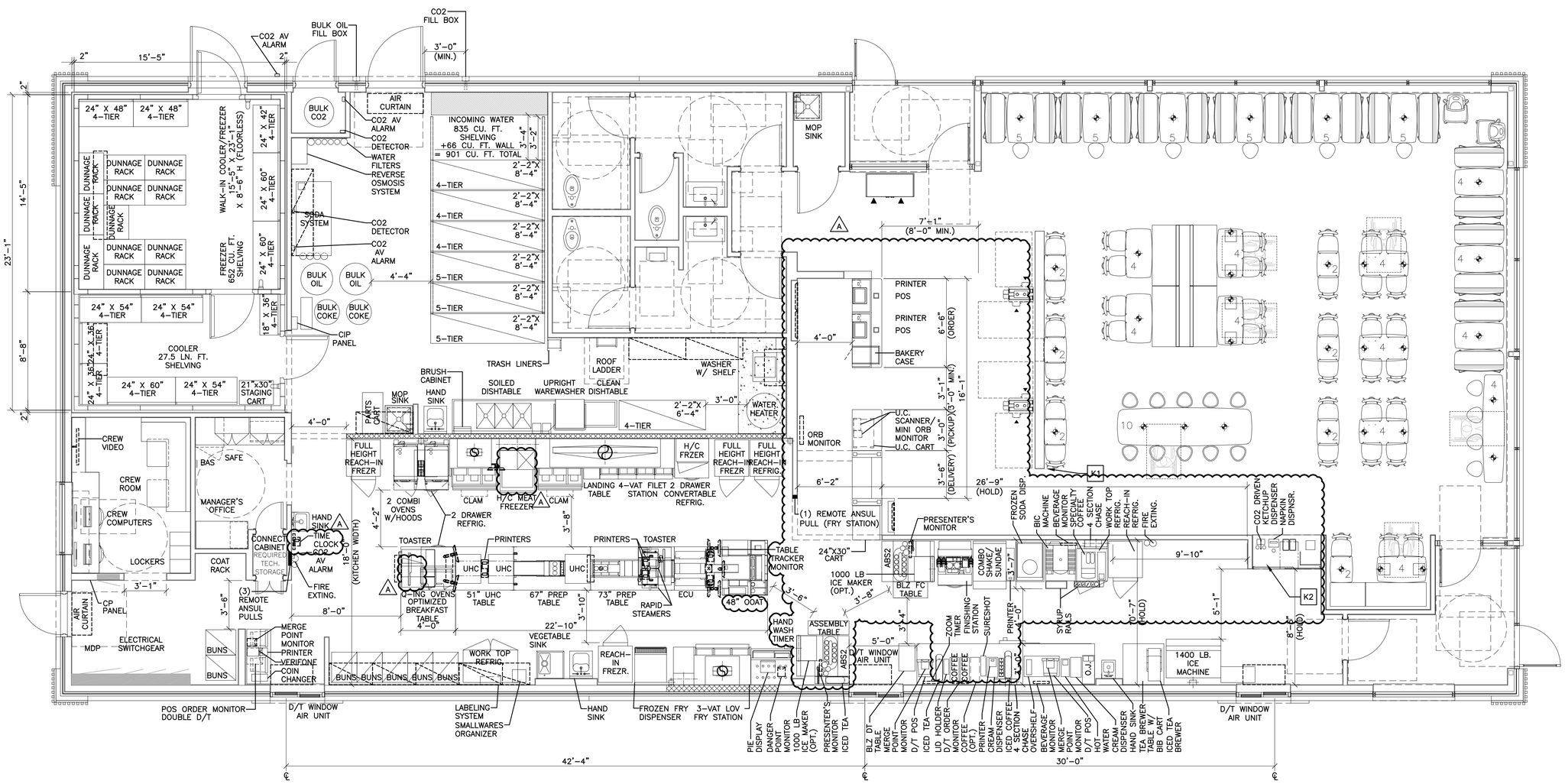

1 K1.0 KITCHEN COVER SHEET

1/4" = 1'-0"

KEYED NOTES

K1 SEATING AND KIOSKS MUST BE 5'-0" CLEAR FROM BEVERAGE CELL WALL

K2 KES TO ENSURE AMENITY TOWER EQUIPMENT PLACEMENT MEETS ADA REQUIREMENTS

REV	DATE	DESCRIPTION	BY
A	11022020	SAO UPDATES	RH

PREPARED BY:

PREPARED FOR: McDonald's USA, LLC

© 2019 McDonald's USA, LLC

These drawings and specifications are the confidential and proprietary property of McDonald's USA, LLC and shall not be copied or reproduced without written authorization. The contract documents were prepared for use on this specific site in conjunction with its issue date and are not suitable for use on any other project. Modifications to these drawings for reference or example on another project requires the services of properly licensed architects and engineers. Reproduction of the contract documents for reuse on another project is not authorized.

DRAWN BY RH

STD ISSUE DATE 2019_11

REVIEWED BY: RH

DATE ISSUED 11 15 2019

TITLE 2019 STANDARD BUILDING – BB20 4597–WOOD/WOOD

DESCRIPTION WOOD BEARING WALLS W/4" BRICK EXTERIOR FINISH & CI WOOD ROOF TRUSS FRAMING E.I.F.S. /BATTEN/METAL PANEL/BRICK EXTERIOR FINISH

SITE ID 015–0071

SITE ADDRESS 605 South 7th St. Kansas City,KS

SHEET NO. 015–0071.00.0 K1.0 KITCHEN COVER SHT

NOTE: DIMENSION VARIES BETWEEN CLR/FZR & EXT. WALL 2" MIN. – 4" MAX. SEE ARCH DWGS.

DRAWING NOTES

1. ALL DIMENSIONS SHOWN ARE TAKEN TO FACE OF WALL FINISH
2. * INDICATES OPTIONAL EQUIPMENT
3. KES TO VERIFY ALL BLOCKING FOR WALL MOUNTED EQUIPMENT AS REQUIRED BY GENERAL NOTE 9 ON A1.0 PRIOR TO INSTALLATION

SEE SHEET K2.1 FOR EQUIPMENT SCHEDULE

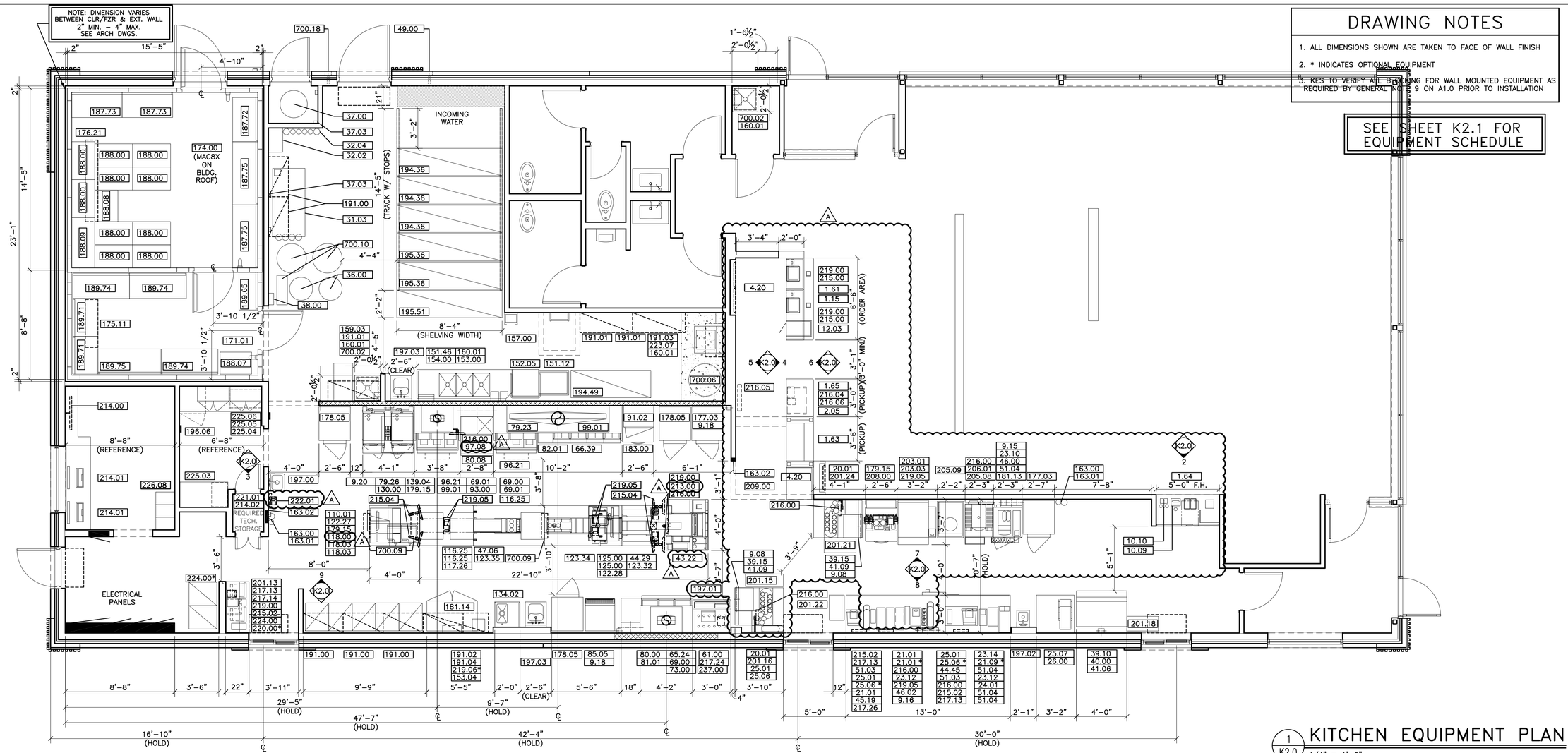

1 K2.0 KITCHEN EQUIPMENT PLAN
1/4" = 1'-0"

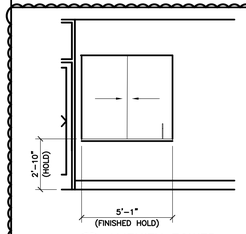

2 K2.0 AMENITY TOWER
1/4" = 1'-0"

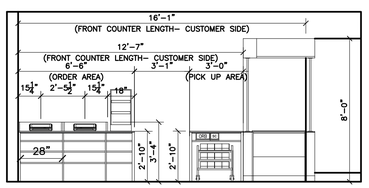

4 K2.0 FRONT COUNTER
1/4" = 1'-0"

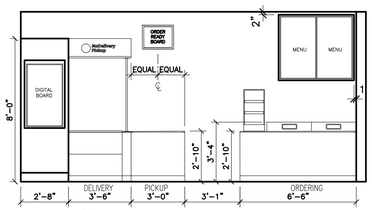

6 K2.0 FRONT COUNTER ELEVATION
1/4" = 1'-0"

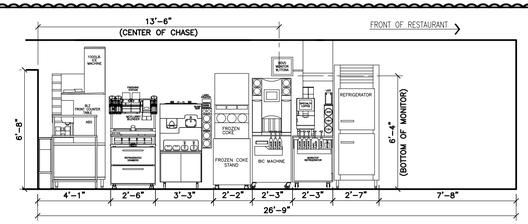

7 K2.0 BEVERAGE CELL (INTERIOR WALL)
1/4" = 1'-0"

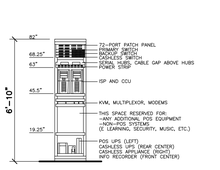

3 K2.0 COMPUTER CLOSET RACK
1/4" = 1'-0"

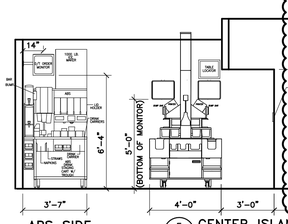

ABS SIDE

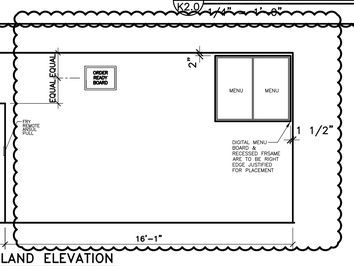

5 K2.0 CENTER ISLAND ELEVATION
1/4" = 1'-0"

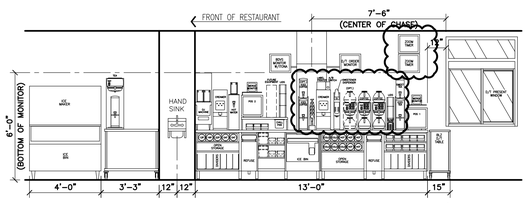

8 K2.0 BEVERAGE CELL (EXTERIOR WALL)
1/4" = 1'-0"

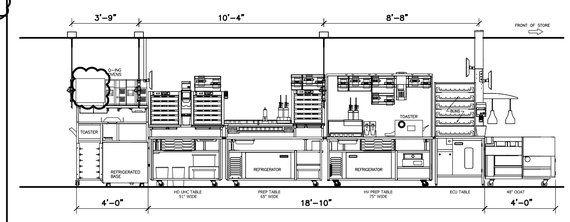

9 K2.0 OPTIMIZED PREP LINE
1/4" = 1'-0"

REV	DATE	DESCRIPTION	BY
A	11022020	SAO UPDATES	RH

PREPARED BY:

PREPARED FOR: McDonald's USA, LLC

©2019 McDonald's USA, LLC
These drawings and specifications are the confidential and proprietary property of McDonald's USA, LLC and shall not be copied or reproduced without written authorization. The contract documents were prepared for use on this specific site in conjunction with its issue date and are not suitable for use on other projects or sites. Reproduction of these drawings for reference or example on another project requires the services of properly licensed architects and engineers. Reproduction of the contract documents for reuse on another project is not authorized.

DRAWN BY RH
STD ISSUE DATE 2019_11
REVIEWED BY RH
DATE ISSUED 11 15 2019

TITLE 2019 STANDARD BUILDING – BB20
4597–WOOD/WOOD

DESCRIPTION
WOOD BEARING WALLS W/4" BRICK EXTERIOR FINISH & CI
WOOD ROOF TRUSS FRAMING
E.I.F.S./BATTEN/METAL PANEL/BRICK EXTERIOR FINISH

SITE ID 015–0071
SITE ADDRESS 605 South 7th St. Kansas City,KS

SHEET NO. 015–0071.00.0
K2.0
KITCHEN PLAN

x = Optional Equipment VIF = Verify in Field
GC = General Contractor
R = Relocated Equipment

EQUIPMENT SCHEDULE

ITEM	O	QTY	DESCRIPTION	MANUFACTURER	MODEL #	UL	NSF	FURNISHED	GENERAL REMARKS	SPECIAL REQUIREMENTS
1.15		3	SERVICE POD COUNTER PLUS BASE EXTENSION – 6"	DECOR	MFC–6	–	2	GC	–	
1.61		1	SERVICE POD – 60"	DECOR	SEE PLAN	–	2	GC	–	
1.63		1	McDELIVERY PICKUP COUNTER	DECOR	SEE PLAN	–	2	GC	–	
1.64		1	AMENITY TOWER	DECOR	SEE PLAN	–	2	GC	–	
1.65		1	PICKUP POD – 36"	DECOR	SEE PLAN	–	2	GC	–	
2.05		1	UNDER COUNTER CART – 24"W x 18"D FRONT COUNTER	INTERMETRO	UC18–DMS	–	2	KES	–	
4.20		3	MENUBOARD – DIGITAL	LG	49SH7DB	–	–	AT&T	–	
9.08		2	UTILITY CHASE – ICE MAKER ON ABS VERSION	KES	5"x8"x23"	–	2	KES	CONCEALS WATER AND CONDENSING UNIT LINES	
9.15		1	UTILITY CHASE – FFDT INTERIOR WALL	KES	20"x5"x76"	–	2	KES	4 SECTION CHASE FOR BUYOUT RECEPTACLES, POS, CO2 AND WATER	
9.16		2	UTILITY CHASE – FFDT EXTERIOR WALL	KES	20"x5"x76"	–	2	KES	4 SECTION CHASE FOR BUYOUT RECEPTACLES, POS AND WATER	
9.18		2	UTILITY CHASE – WALL VERSION	KES	4"x4"x82"	–	2	KES	CHASE FOR BULK OIL LINES, MOUNT AT 2'–0"	
9.20		1	UTILITY CHASE – COMBI CELL	KES	4"x8"x84"	–	2	KES	CHASE FOR BUYOUT RECEPTACLES AND WATER	
10.09		1	NAPKIN DISPENSER – DROP–IN	GEORGIA PACIFIC	54213	–	2	KES	–	
10.10		1	CO2 DRIVEN KETCHUP DISPENSER	PERFECTION	MCD–1	–	2	KES	–	
12.03		1	BAKED GOODS DISPLAY CASE – 14"	ANTUNES	DC–14	–	2	KES	–	
20.01		2	AUTOMATED BEVERAGE SYSTEM 2.0	IMI CORNELIUS	621058890LCN	–	–	KES	INSTALLATION KIT INCLUDES STAINLESS STEEL CHASE & DATA LINE	
21.01		3	COFFEE BREWER (THERMAL POTS)	BUNN–O– MATIC	AXIOM–DV–3	E32066	4	KES	W/ELECTRONIC CONTROLLER FOR CONVERSION TO LOW OR HIGH VOLTAGE	
21.09		1	HOT WATER DISPENSER	BUNN–O– MATIC	HW2	E32066	4	KES	–	
23.10		1	ESPRESSO BREWER	FRANKE	FM850	–	4	KES	–	
23.12		2	COFFEE CREAM DISPENSER	SURESHOT	AC110–PC–51	E217698	20	KES	–	
23.14		1	SUGAR/SWEETENER DISPENSER	SURESHOT	AC2–GP–30	E217698	18	KES	–	
24.01		1	ORANGE JUICE DISPENSER	TAYLOR	C009	–	18	KES	–	
25.01		3	SLIMLINE ICED BEVERAGE DISPENSER	BUNN–O– MATIC	TDO–N	E32066	4	KES	KES TO VERIFY EXACT QUANTITY PER MARKET	
25.06		3	SLIMLINE ICED BEVERAGE DISPENSER – SHORT	BUNN–O– MATIC	TDO–N LP	E32066	4	KES	KES TO VERIFY EXACT QUANTITY PER MARKET	
25.07		1	INFUSION TEA BREWER – MIS	BUNN–O– MATIC	ITCB–DV	E32066	4	KES	PROVIDED WITH BREWER, INSTALLATION KIT AND TDO–N BOOSTER	
26.00		1	TEA BREWER TABLE – 30"X36"	ISS SHELVING	WST1756C	–	2	KES	–	
31.03		1	SODA SYSTEM PACKAGE B.I.B.(RECIRCULATING– 3 TOWERS) – REMOTE	MULTIPLEX	50GR04	E121876	18	KES	–	
32.02		1	REVERSE OSMOSIS WATER FILTRATION SYSTEM – TANKLESS	EVERPURE	ENVI–RO–600	–	–	KES	FOR COFFEE MAKER, ESPRESSO MACHINE, AND RAPID BUN STEAMER	
32.04		1	WATER FILTRATION SYSTEM	EVERPURE	EV9337–26	–	–	KES	–	
36.00		2	BULK COKE	CHART INDUSTRIES	10667511	–	18	MANU–FACTURER	SYRUP LINES BY CHART INDUSTRIES	
37.00		1	BULK CO2 – 750 LB.	CHART INDUSTRIES	CARBO–MAX 750	–	–	MANU–FACTURER	–	
37.03		2	CO2 SAFETY SYSTEM	SEE RMKS	–	–	–	KES	SEE MECHANICAL DRAWINGS	INCLUDES DETECTOR AND (4) AV ALARMS
38.00		1	CLEAN IN PLACE PANEL	CHART INDUSTRIES	10667431	–	18	MANU–FACTURER	MOUNT 6"W x 7"H. BOX @ 6'–0" AFF TO BOX CENTER LINE	
39.10		1	ICE MACHINE – 1400 LB.	MANITOWOC	IY1494N3/ B970	SA4027	12	KES	USE HEADMASTER KIT K00221	
39.15		2	ICE MACHINE – 1000 LB.	MANITOWOC	IB1094YC	SA4027	12	KES	CONDENSER: ICVD–1195–263	
40.00		1	ICE MACHINE CHASE	KES	4"x6"x48"	–	2	KES	CONCEALS WATER AND CONDENSING UNIT LINES	
41.06		1	ICE MACHINE REMOTE CONDENSER – 1400 LB.	MANITOWOC	JC–1395	SA4027	12	KES	–	
41.09		2	ICE MACHINE REMOTE CONDENSER – 1000 LB.	MANITOWOC	ICVD–1195–263	SA4027	12	KES	–	
43.22		1	OPTIMIZED ORDER ASSEMBLY TABLE	KES	OOAT 48X48	E152097	2	KES	–	
44.29		1	BREAKER PANEL– 125 AMP – 3 PHASE – EQUIPMENT MOUNTED	KES	–	–	–	KES	–	
44.45		1	MEDIUM RISER SHELF – 31" TO 43"	KES	–	–	2	KES		
45.19		1	MODULAR BEVERAGE CABINET – 13'–0"	KES	–	–	2	KES	–	
46.00		1	CUP DISPENSER VERTICAL 3 CUP	KES	–	–	2	KES	–	
46.02		1	SYRUP BOTTLE RACK – (5) SYRUP PUMPS	PRONTO	–	–	2	KES	–	
47.06		1	CHILLED RAIL	KES	–	–	7	KES	LOCATED UNDER PREP TABLE OVERSHELF	
49.00		1	CO2 FILL BOX – 6 1/2"W x 18"H	CHART INDUSTRIES	8512629	–	–	MANU–FACTURER	SEE EXTERIOR ELEVATIONS FOR MOUNTING HEIGHT. INSTALLED BY GC	
51.03		2	CUP LID HOLDER 3 HIGH S/S	KES	–	–	2	KES	–	
51.04		4	CUP LID HOLDER SINGLE STACK 8" HIGH	KES	–	–	2	KES	–	
61.00		1	FRY BAGGING STATION 36"	KES	FB01–4	E99018	2	KES	–	
65.24		1	3–VAT LOV FRYER – ELECTRIC – F/F/F	FRYMASTER	BIELA314–CSD	E44571	4	KES	–	
66.39		1	4–VAT LOV FRYER – ELECTRIC – S/S/S/S	FRYMASTER	BIELA414–8CSD	E44571	4	KES	–	
69.00		2	CAPTURE JET PLENUM – FRYER	HALTON	CJP–F	MH27607	2	KES	ATTACH TO UNIVERSAL EXHAUST HOOD	
69.01		2	CAPTURE JET PLENUM – GRILL	HALTON	CJP–G	MH27607	2	KES	ATTACH TO UNIVERSAL EXHAUST HOOD	
73.00		1	UNIVERSAL EXHAUST HOOD 3–VAT FRYER	KES	UH–50	MH12755	2	KES	–	
79.23		1	UNIVERSAL EXHAUST HOOD FULL–CLAM/4–VAT FRYER	KES	UH–122	MH12755	2	KES	–	
79.26		2	VENTLESS HOOD FOR COMBI OVEN	HALTON	COV	E325060	2	KES	–	
80.00		1	MECHANICAL CHASE	KES	9"x18" SGCL.	E163328	2	KES	–	
80.08		1	MECHANICAL CHASE	KES	9"x32" SGCL.	E163328	2	KES	–	
81.01		1	PRODUCT LANDING SHELF – SOLID TOP	KES	–	–	2	KES	–	
82.01		1	LANDING TABLE WITH POWER	KES	–	–	2	KES	–	
85.05		1	FROZEN FRY DISPENSER	RAM	280–FP	E140753	4	KES	–	
91.02		1	WALL MOUNT FREEZER UNIT–SINGLE WIDE–HIGH CAPACITY	KES	HCWF1	SA7329	7	KES	AIR–COOLED, SELF–CONTAINED – MOUNT BOTTOM AT 51" AFF	HCWF1.99A INSTALL HARDWARE KIT REQUIRED
93.00		1	UNIVERSAL EXHAUST HOOD FULL–CLAM GRILL	KES	UH–43	MH12755	2	KES	–	
96.21		2	36" NEXT GEN 3–PLATEN CLAMSHELL GRILL – ELECTRIC	GARLAND	ME–3PX	E28898	4	KES	–	
97.08		1	MEAT FREEZER – DOUBLE WIDE – HIGH CAPACITY – RIGHT HAND	KES	HCMF30B–RH	SA6032 S	2	KES	AIR–COOLED, SELF–CONTAINED	
99.01		2	GRILL TOOL ORGANIZER – 43" HOOD	KES	–	–	2	KES	–	
110.01		1	OPTIMIZED BREAKFAST TABLE	KES	OBT	–	2	KES	–	
116.25		3	UNIVERSAL HOLDING CABINET – HIGH DENSITY – 2–SIDED – PIN & SLEEVE	PRINCE CASTLE	UHC6PT–22MCD	–	4	KES	ETL RATINGS: SAFETY = 3197509CHI–003, SANITATION = 3197509CH1–004	
117.26		1	UHC TABLE HUB & SPOKE – 2 SIDED – 51"D x 34"W – PIN&SLEEVE	KES	–	–	2	KES	–	
118.00		1	Q'ING OVEN – PIN & SLEEVE	AMANA	MC23MPW2	E40456	4	KES	–	
118.03		2	Q'ING OVEN – PIN & SLEEVE	ACP	MCMOUC24	–	4	KES	–	
122.27		1	NEXT GEN. UNIVERSAL RADIANT TOASTER – PIN & SLEEVE	ANTUNES	HRT–5H	–	4	KES	–	
122.28		1	NEXT GEN. UNIVERSAL CONTACT TOASTER – PIN & SLEEVE	ANTUNES	HCT–5H	–	4	KES	–	
123.32		1	HUB & SPOKE ELECTRIC COMMUNICATION UTILITY	KES	ECU	–	2	KES	–	
123.34		1	PREP TABLE – HD – 2–SIDED OPL – 38"D x 73 1/2" – PIN & SLEEVE W/REF.	KES	–	–	2	KES	–	
123.35		1	PREP TABLE – HD – 2–SIDED OPL – 38"D x 67 1/2" – PIN & SLEEVE W/REF.	KES	–	–	2	KES	–	
125.00		2	RAPID BUN STEAMER	PRINCE CASTLE	625–MFY	–	4	KES	–	
130.00		2	COMBI OVEN	MANITOWOC	MS610–2083LCMD–1	–	4	KES	–	
134.02		1	VEGETABLE SINK	KES	SK04–4	–	2	KES	–	
139.04		1	COMBI OVEN STAND – DOUBLE WIDE	KES	–	–	2	KES	–	
151.12		1	CLEAN DISHTABLE – LEFT HAND – 28.23"	KES	SK–SPL	–	2	KES	–	
151.46		1	SOILED DISHTABLE – RIGHT HAND – 90.5" WIDE	KES	SK–SPL	–	2	KES	–	
152.05		1	WAREWASHER	ECOLAB	QSR TSC	E5956	3	MANU–FACTURER	PROVIDE VAPOR VENT – REQUIRED	
153.00		1	SCULLERY SHELVING KIT – 3 TIER – 14" x 36"	INTERMETRO	SHSS–4	–	2	KES	–	
153.04		1	SMALLWARE WALL ORGANIZER	INTERMETRO	SW1812–MPS	–	2	KES	–	
154.00		1	BRUSH CABINET	DISPLAY HOUSE	TBC–1	–	4	KES	–	
157.00		1	TRASH LINER DISPENSER SHELF	KES	A0053	–	2	KES	–	
159.03		1	UNIVERSAL PARTS CART – 36" W	INTERMETRO	MCD–1836UPC	–	2	KES	–	
160.01		4	CHEMICAL SYSTEM	ECOLAB	–	–	–	MANU–FACTURER	–	
163.00		2	FIRE EXTINGUISHER – 5 LB. – ABC	ANSUL	SEE RMKS	–	–	SEE RMKS	LOCAL ANSUL AGENT SPECIFIES, SUPPLIES & LOCATES PER LOCAL CODE	
163.01		2	FIRE EXTINGUISHER – 6 L. – K GUARD	ANSUL	SEE RMKS	–	–	SEE RMKS	LOCAL ANSUL AGENT SPECIFIES, SUPPLIES & LOCATES PER LOCAL CODE	
163.02		4	REMOTE ANSUL PULL	ANSUL	4835	EX3470	–	SEE RMKS	CODE MAY REQUIRE LOCAL ANSUL AGENT TO SUPPLY	
171.01		1	WALK–IN COOLER / FREEZER FLOORLESS	NORLAKE	–	E42763	7	KES	–	
174.00		1	REMOTE CONDENSING UNIT	BOHN	MAC8XS6CA	SA4272	–	KES	BEACON II SYSTEM	
175.11		1	COOLER EVAPORATOR	BOHN	ADT104BEB2N6MK	SA1525	–	KES	BEACON SYSTEM II EVAPORATOR	
176.21		1	FREEZER EVAPORATOR	BOHN	LET180BEB2N6MK	SA1525	–	KES	BEACON SYSTEM II EVAPORATOR	
177.03		2	REACH–IN REFRIGERATOR–SINGLE WIDE	BEVERAGE AIR	ER24–1AHS–34	SA2651	7	KES	–	
178.05		3	REACH–IN FREEZER – SINGLE WIDE	BEVERAGE AIR	EF24–1AHS–34	SA2651	7	KES	–	
179.15		3	REFRIGERATOR – 2 DRAWER BASE – 30" WIDE	KES	2DBR–30	SA4044	7	KES	–	
181.13		1	REFRIGERATOR – SPECIALTY COFFEE– 27" WIDE	TRUE	TUC–27 MCDCF1	SA33040	7	KES	RIGHT–HAND HINGED	
181.14		1	REFRIGERATOR – WORKTOP – 48" WIDE	TRUE	TWT–48 MCD1	SA4065	7	KES	–	
183.00		1	REFRIGERATOR/FREEZER – 2 DRAWER BASE – 30" WIDE	KES	87079	SA4044	7	KES	–	
187.72		1	FREEZER SHELVING 24" x 42" x 74" H. – 4–TIER	ISS SHELVING	FSMS/FSMA742442E	–	2	KES	–	
187.73		2	FREEZER SHELVING 24" x 48" x 74" H. – 4–TIER	ISS SHELVING	FSMS/FSMA742448E	–	2	KES	–	

x = Optional Equipment VIF = Verify in Field
GC = General Contractor
R = Relocated Equipment

EQUIPMENT SCHEDULE

ITEM	O	QTY	DESCRIPTION	MANUFACTURER	MODEL #	UL	NSF	FURNISHED	GENERAL REMARKS	SPECIAL REQUIREMENTS
187.75		2	FREEZER SHELVING 24" x 60" x 74" H. – 4–TIER	ISS SHELVING	FSMS/FSMA742460E	–	2	KES	–	
188.00		10	DUNNAGE RACK 22" x 36"	INTERMETRO	HP2236PD	–	2	KES	–	
188.07		1	UNIVERSAL STAGING CART	ISS SHELVING	WST1384Y	–	2	KES	–	
188.08		1	DUNNAGE RACK 22" x 30"	INTERMETRO	HP2230PD	–	2	KES	–	
188.09		1	DUNNAGE RACK 22" x 48"	INTERMETRO	HP2248PD	–	2	KES	–	
189.65		1	COOLER SHELVING 18" x 36" x 74" H. – 4–TIER	ISS SHELVING	FSMS/FSMA741836E	–	2	KES	–	
189.71		2	COOLER SHELVING 24" x 36" x 74" H. – 4–TIER	ISS SHELVING	FSMS/FSMA742436E	–	2	KES	–	
189.74		3	COOLER SHELVING 24" x 54" x 74" H. – 4–TIER	ISS SHELVING	FSMS/FSMA742454E	–	2	KES	–	
189.75		1	COOLER SHELVING 24" x 60" x 74" H. – 4–TIER	ISS SHELVING	FSMS/FSMA742460E	–	2	KES	–	
191.00		5	VALANCE SHELVING – 18" x 36"	INTERMETRO	M1836C–MP	–	2	KES	MOUNT AT 6'–8"AFF TO SHELF BOTTOM UNLESS OTHERWISE NOTED	
191.01		3	VALANCE SHELVING – 18" x 48"	INTERMETRO	M1848C–MP	–	2	KES	MOUNT AT 6'–8"AFF TO SHELF BOTTOM UNLESS OTHERWISE NOTED	
191.02		1	VALANCE SHELVING – 18" x 60"	INTERMETRO	M1860C–MP	–	2	KES	MOUNT AT 6'–8"AFF TO SHELF BOTTOM UNLESS OTHERWISE NOTED	
191.03		1	VALANCE SHELVING – 18" x 30"	INTERMETRO	M1830C–MP	–	2	KES	MOUNT AT 5'–0"AFF TO SHELF BOTTOM FOR ABOVE WASHER APPLICATION	
191.04		1	VALANCE SHELVING – 18" x 36"	INTERMETRO	M1836C–MP	–	2	KES	MOUNT AT 5'–0"AFF TO SHELF BOTTOM –W/ST STL LINER FOR SALAD EQUIP	
194.36		3	DRY SHELVING 26" x 100" x 84" H.–4–TIER – MOBILE	DENSTOR	–	–	2	KES	–	
194.49		1	DRY SHELVING 26" x 76" x 84" H.– 4–TIER – FIXED	DENSTOR	–	–	2	KES	–	
195.36		2	DRY SHELVING 26" x 100" x 84" H.–5–TIER– MOBILE	DENSTOR	–	–	2	KES	–	
195.51		1	DRY SHELVING 26" x 100" x 84" H.– 5–TIER– FIXED	DENSTOR	–	–	2	KES	–	
196.06		1	SAFE – STANDARD BLDG. – LEFT HINGE	NKL	BSD4125FGXL–MC	–	–	OWNER	–	
197.00		1	STAINLESS STEEL HAND SINK	ADVANCE TABCO	7–PS–61	–	2	GC	REFER TO PLUMB. DWGS. FOR DETAILS, SOAP & TOWEL DISP. BY OTHERS	PROVIDE SIDE SPLASHES (7–PS–11) WHEN REQUIRED BY LOCAL CODE
197.01		1	HAND WASH TIMER	NATIONAL CONTROLS	TMD–T1715–120	E53595	–	KES	–	
197.02		1	STAINLESS STEEL HAND SINK – SPACESAVER	ADVANCE TABCO	7–PS–22	–	2	GC	REFER TO PLUMB. DWGS. FOR DETAILS, SOAP & TOWEL DISP. BY OTHERS	PROVIDE SIDE SPLASHES (7–PS–11A) WHEN REQUIRED BY LOCAL CODE
197.03		2	STAINLESS STEEL HAND SINK – ADA	ADVANCE TABCO	7–PS–26	–	2	GC	REFER TO PLUMB. DWGS. FOR DETAILS, SOAP & TOWEL DISP. BY OTHERS	PROVIDE SIDE SPLASHES (7–PS–11D) WHEN REQUIRED BY LOCAL CODE
201.13		1	DRIVE–THRU CASH STAND – 21" D x 48" W	INTERMETRO	DT48–8	–	2	KES	SOLID WORK TOP, WIRE SHELVES	
201.15		1	READY NEXT DRIVE–THRU ASSEMBLY CART – 12" D x 36" W	INTERMETRO	DTPC–36	–	2	KES	–	
201.16		1	DRIVE–THRU ABS CART	KES	–	–	2	KES	ABS DRINK STAGING CART WITH TROUGH	
201.18		1	CBB STAGING CART	INTERMETRO	MCD–CBB	–	2	KES	–	
201.21		1	BLZ FRONT COUNTER TABLE – 30" D x 14" W	INTERMETRO	MCD1430–BLZM	–	2	KES	W/ CASTERS AND OVERSHELF	
201.22		1	BLZ DRIVE THRU TABLE – 24" D x 14" W	INTERMETRO	MCD1430–BLZT	–	2	KES	–	
201.24		1	FRONT COUNTER ABS CART	KES	–	–	2	KES	ABS DRINK STAGING CART WITH TROUGH	
203.01		1	HEAT TREAT COMBINATION SHAKE/SUNDAE MACHINE	CARPIGIANNI	K3	SA4203	6	KES	SUPPLIED WITH CONE DISPENSER AND 7'–6 LONG CORD	
203.03		1	CUP/CONE DISPENSER	KES	–	–	2	KES	–	
205.08		1	BIC MACHINE	MULTIPLEX	M4–8–2	SA12070	6	KES	–	
205.09		1	FROZEN BEVERAGE DISPENSER	IMI CORNELIUS	VIPER 3	SA2128	6	KES	–	
206.01		1	SPECIALTY BEVERAGE STANDOFF SHELF	KES	KES	–	2	KES	MOUNT SHELF @ 2'–6" AFF	
208.00		1	FINISHING STATION	KES	–	–	7	KES	–	
209.00		1	SMALL 24X30 DELIVERY STAGING STATION	INTERMETRO	MCD2430DSS	–	2	KES	–	
213.00		1	TABLE LOCATOR SYSTEM	LRS	TRACKER PRO	–	–	OWNER	–	
214.00			CREW VIDEO	BY OWNER	BY OWNER	–	–	OWNER	–	
214.01		2	CREW COMPUTER	BY OWNER	BY OWNER	–	–	OWNER	–	
214.02		1	CONNECTIVITY CABINET	BY OWNER	BY OWNER	–	–	OWNER	V.I.F. EXACT LOCATION FOR NETWORK RACK	
215.00		2	POS REGISTER – FRONT COUNTER	BY OWNER	BY OWNER	OEM	–	OWNER	INCLUDES MONITOR AND CPU	
215.02		4	POS REGISTER – 2 WINDOW D/T	BY OWNER	BY OWNER	OEM	–	OWNER	INCLUDES MONITOR AND CPU	
215.04		4	POS – KVS MONITOR	BY OWNER	BY OWNER	OEM	–	OWNER	–	
216.00		9	POS – VIDEO MONITOR	BY OWNER	BY OWNER	E106786	–	OWNER	SUPPORTS INSTALLED BY GC IF REQUIRED – MOUNT @ 5'–8" AFF	FOR APPLICATIONS ABOVE ABS, MOUNT AT 6'–6" AFF
216.04		1	ORB MINI MONITOR	BY OWNER	BY OWNER	–	–	OWNER	UNDER COUNTER BRACKET BY POS SUPPLIER	
216.05		1	ORB MONITOR	BY OWNER	BY OWNER	–	–	OWNER	MOUNTING KIT PROVIDED BY KES	
216.06		1	ORB SCANNER	BY OWNER	BY OWNER	–	–	OWNER	UNDER COUNTER BRACKET BY POS SUPPLIER	
217.13		3	MERGE POINT MONITOR (DOUBLE DRIVE–THRU)	BY OWNER	BY OWNER	–	–	OWNER	MONITORS ARE REQUIRED FOR SIDE BY SIDE DRIVE THRU SYSTEM	–
217.14		1	POS – ORDER MONITOR (DOUBLE DRIVE THRU)	BY OWNER	BY OWNER	E106786	–	OWNER	SUPPORTS INSTALLED BY GC IF REQUIRED – MOUNT @ 5'–8" AFF	
217.24		1	DANGER POINT MONITOR (DOUBLE DRIVE–THRU)	BY OWNER	BY OWNER	–	–	OWNER	MONITORS ARE REQUIRED FOR SIDE BY SIDE DRIVE THRU SYSTEM	
217.26		1	ZOOM TIMER	HME	ZOOM DTOS	–	–	OWNER	–	
219.00		5	POS – RECEIPT PRINTER	BY OWNER	BY OWNER	OEM	–	OWNER	–	
219.05		6	STICKY LABEL PRINTER	BY OWNER	BYOWNER	OEM	–	OWNER	–	–
219.06		1	LABELING SYSTEM	TRANSACT	9700	–	–	KES	–	
220.00		1	POS – COIN DISPENSER	BY OWNER	BY OWNER	OEM	–	OWNER	–	
221.01		1	POS – OFFICE	BY OWNER	BY OWNER	OEM	–	OWNER	–	
222.01		1	TIME CLOCK	BY OWNER	BY OWNER	OEM	–	OWNER	–	
223.07		1	WASHER – ELECTRIC	WHIRLPOOL	CAE2793BQ	–	–	KES	–	
224.00		2	AUDIO SYSTEM – 2 BOOTH	BY OWNER	–	–	–	AUDIO SUPP.	ONE (1) STANDARD, ONE (1) ADDTL. REQ. FOR TWO AT A TIME ORDER TAKING	
225.03		1	OFFICE PACKAGE/DESK UNIT	DENSTOR	2000–0100	–	–	KES	WORK SURFACE 75", (1) DESK PEDESTAL W/ 2 DRAWERS AND (1) PEDESTAL W/ 3 DRAWERS	
225.04		1	OFFICE PACKAGE/ 2–WALL CABINETS	DENSTOR	2000–0200	–	–	KES	–	
225.05		1	OFFICE PACKAGE/HIGH WORK SURFACE	DENSTOR	2000–0300	–	–	KES	W/ (6) L–BRACKETS – WORK SURFACE IS 75" W. – CUT IN FIELD IF REQUIRED	
225.06		1	OFFICE PACKAGE W/3 DRAWER LATERAL FILE	DENSTOR	2000–0400	–	–	KES	–	
226.08		3	CREW LOCKERS –12" x 12" x 18" (6 HIGH)	DENSTOR	3–121278	–	2	KES	–	
237.00		1	PIE DISPLAY	PRINCE CASTLE	524–MCDC	E341354	4	KES	PROVIDE WITH S/S PANEL	
700.02		2	MOP SINK	GC	–	–	2	GC	–	
700.06		1	WATER HEATER – ELECTRIC – 54KW	GC	SEE RMKS	–	2	GC	REFER TO PLUMB. DWGS. FOR DETAILS	
700.09		3	ECONOMY OEP BOX W/MOUNTING HARDWARE	ACS	OEP–6	E71309	–	KES	6" W. x 24" D.	
700.10	X	1	BULK OIL SYSTEM	RTI	BI–3F	SEE RMKS	4	MANU–FACTURER	IF AVAILABLE IN MARKET – ETL ELECTRICAL RATING: 9900762	
700.18	X	1	BULK OIL FILL BOX – 8"Wx10"H	RTI	–	–	–	MANU–FACTURER	SEE EXTERIOR ELEVATIONS FOR MOUNTING HEIGHT, INSTALLED BY GC	

SEE SHEET K2.0 FOR EQUIPMENT LAYOUT AND TAG IDENTIFICATION

1 / K2.1 KITCHEN SCHEDULE

REV	DATE	DESCRIPTION	BY
A	11022020	SAO UPDATES	RH

PREPARED BY:

PREPARED FOR: McDonald's USA, LLC

©2019 McDonald's USA, LLC

These drawings and specifications are the confidential and proprietary property of McDonald's USA, LLC, and shall not be copied or reproduced without written authorization. The contract documents were prepared for use on this specific site in conjunction with its issue date and are intended only for that specific project. Modifications to these drawings for reference or example on another project requires the services of properly licensed architects and engineers. Reproduction of the contract documents for use on another project is not authorized.

DRAWN BY: –
STD ISSUE DATE 2019_11
REVIEWED BY: RH
DATE ISSUED 11 15 2019

TITLE: 2019 STANDARD BUILDING – BB20 4597–WOOD/WOOD

DESCRIPTION: WOOD BEARING WALLS W/4" BRICK EXTERIOR FINISH & GI WOOD ROOF TRUSS FRAMING E.I.F.S./BATTEN/METAL PANEL/BRICK EXTERIOR FINISH

SITE ID: 015–0071
SITE ADDRESS: 605 South 7th St. Kansas City,KS

SHEET NO. 015–0071.00.0
K2.1
KITCHEN SCHEDULE