KEYED NOTES:
1. 24"ø MANWAY ACCESS COVER CONSTRUCTED OF ROUND CAST IRON OR SIMILAR RATED FOR HEAVY ROAD TRAFFIC WITH SUFFICIENT WEIGHT TO PREVENT UNAUTHORIZED ACCESS, OR BOLT OR LOCKING MECHANISM.
2. 4" CLEAN OUT
3. MANWAY EXTENSION TO FINISHED GRADE
4. CONCRETE SLAB FOR TRAFFIC LOADING
5. 3"ø VENT BACK TO BUILDING
6. 4"ø INLET
7. 4"ø OUTLET
8. 3"ø VENT CONNECTION
9. HOLD DOWN BRACKET
10. ANTI–BUOYANCY PAD FOR HIGH WATER TABLE INSTALLATIONS

*SEE GREEN TURTLE PROCEPTOR INSTALLATION INSTRUCTIONS FOR ADDITIONAL INFORMATION.

LOADING DESIGN: 12' 0" UNSATURATED SOIL / AASHTO STANDARD HS20–44 LOAD RATING

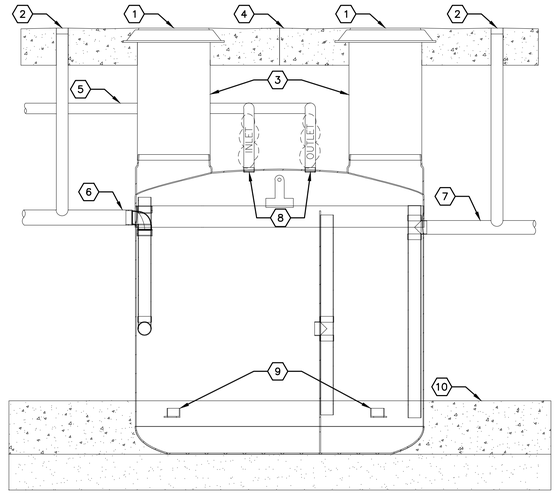

ELEVATION VIEW

DETAIL 1 / P3.0
GREASE INTERCEPTOR INSTALLATION
SCALE: NONE

KEYED NOTES:
1. ACCESS PANEL FOR THERMOSTATIC MIXING VALVE (SEE CHEMICAL SYSTEM INSTALLATION DETAIL)
2. ECOLAB CHEMICAL SYSTEM (SEE CHEMICAL SYSTEM INSTALLATION DETAIL)
3. 24"Wx36"H WALL GUARD (QTY. 2) FURNISHED WITH MOP SINK (SEE PLUMBING FIXTURE SCHEDULE)
4. MOP SINK FAUCET WITH INTEGRAL VACUUM BREAKER (SEE PLUMBING FIXTURE SCHEDULE)
5. HOSE FURNISHED WITH MOP SINK FAUCET (SEE PLUMBING FIXTURE SCHEDULE)
6. HOSE BRACKET FURNISHED WITH MOP FAUCET (SEE PLUMBING FIXTURE SCHEDULE)
7. FLOOR GRATE

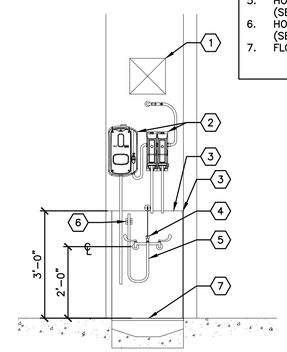

DETAIL 2 / P3.0
RECESSED MOP SINK
SCALE: ½"=1'–0"

KEYED NOTES:
1. FAUCET (SEE PLUMBING FIXTURE SCHEDULE)
2. LAVATORY OR HAND SINK (SEE PLUMBING FIXTURE SCHEDULE)
3. CORIAN COUNTERTOP – TOILET ROOMS ONLY (FURNISHED BY G.C.)
4. LAVATORY CARRIER – TOILET ROOMS ONLY (SEE ARCHITECTURAL DRAWINGS)
5. OUTLINE OF ADA COMPLIANT WRAP (SEE PLUMBING FIXTURE SCHEDULE)
6. THERMOSTATIC MIXING VALVE (SEE VALVE SCHEDULE)

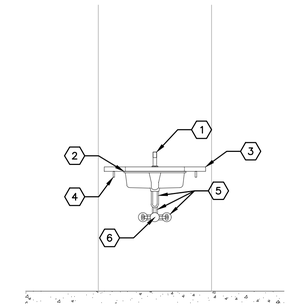

DETAIL 3 / P3.0
LAVATORY (OR HAND SINK)
SCALE: ½"=1'–0"

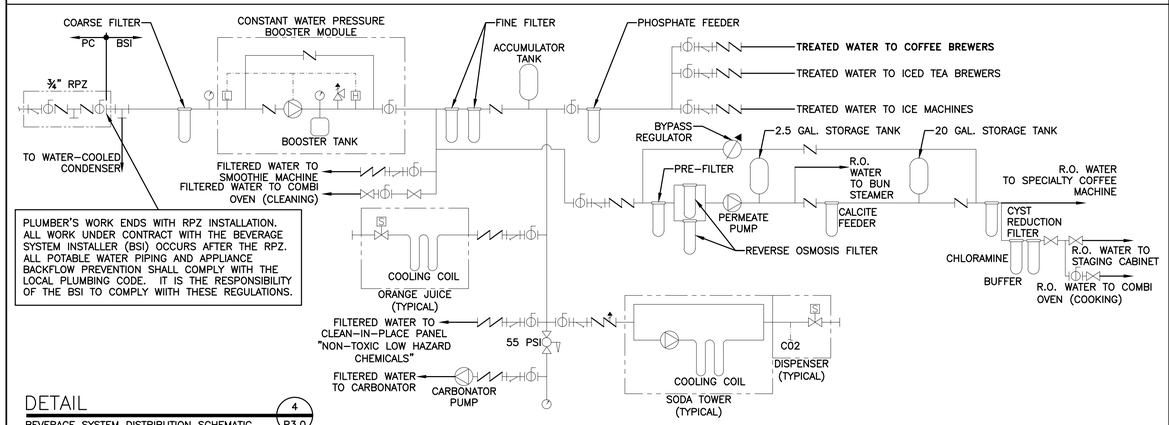

PLUMBER'S WORK ENDS WITH RPZ INSTALLATION. ALL WORK UNDER CONTRACT WITH THE BEVERAGE SYSTEM INSTALLER (BSI) OCCURS AFTER THE RPZ. ALL POTABLE WATER PIPING AND APPLIANCE BACKFLOW PREVENTION SHALL COMPLY WITH THE LOCAL PLUMBING CODE. IT IS THE RESPONSIBILITY OF THE BSI TO COMPLY WITH THESE REGULATIONS.

DETAIL 4 / P3.0
BEVERAGE SYSTEM DISTRIBUTION SCHEMATIC
SCALE: NONE

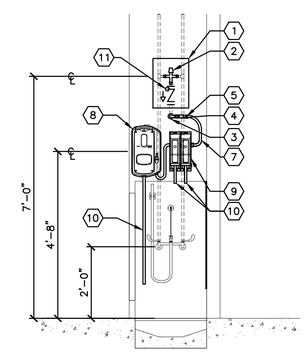

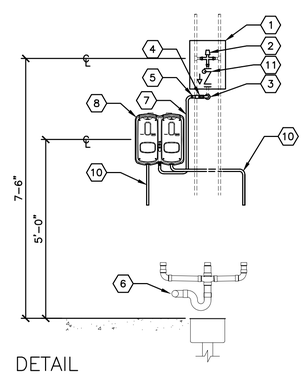

KEYED NOTES:
1. 12"x12" ACCESS PANEL (COORDINATE INSTALLATION WITH G.C.)
2. THERMOSTATIC MIXING VALVE SET TO 110°F (SEE VALVE SCHEDULE)
3. PIPE THROUGH WALL WITH ESCUTCHEON PLATE
4. SHUT–OFF VALVE
5. ¾" MHT CONNECTION
6. 2" SANITARY DRAIN PIPE THROUGH WALL FOR DIRECT CONNECTION.

PLUMBER'S WORK ENDS AT MHT CONNECTION

7. HOSE TO CHEMICAL SYSTEM
8. ECOLAB SOLIDSENSE CHEMICAL DISPENSER
9. ECOLAB SMARTSHAPE CHEMICAL DISPENSER
10. CHEMICAL DISPENSING HOSE
11. 140° WATER SUPPLY WITH ASSE 1055 RATED BACK FLOW PREVENTOR.

DETAIL
CHEMICAL SYSTEM INSTALLATION
SCALE: ½"=1'–0"

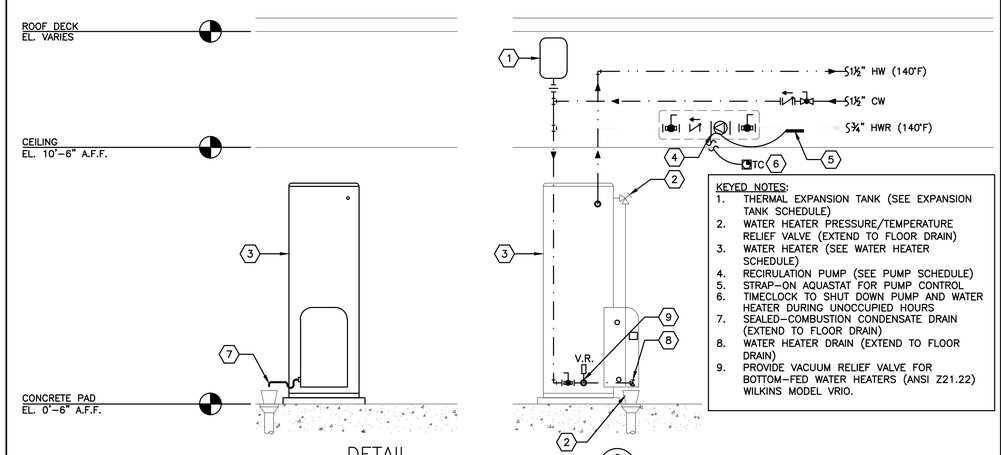

KEYED NOTES:
1. THERMAL EXPANSION TANK (SEE EXPANSION TANK SCHEDULE)
2. WATER HEATER PRESSURE/TEMPERATURE RELIEF VALVE (EXTEND TO FLOOR DRAIN)
3. WATER HEATER (SEE WATER HEATER SCHEDULE)
4. RECIRULATION PUMP (SEE PUMP SCHEDULE)
5. STRAP–ON AQUASTAT FOR PUMP CONTROL
6. TIMECLOCK TO SHUT DOWN PUMP AND WATER HEATER DURING UNOCCUPIED HOURS
7. SEALED–COMBUSTION CONDENSATE DRAIN (EXTEND TO FLOOR DRAIN)
8. WATER HEATER DRAIN (EXTEND TO FLOOR DRAIN)
9. PROVIDE VACUUM RELIEF VALVE FOR BOTTOM–FED WATER HEATERS (ANSI Z21.22) WILKINS MODEL VRIO.

DETAIL 6 / P3.0
ELECTRIC WATER HEATER PIPING
SCALE: NONE

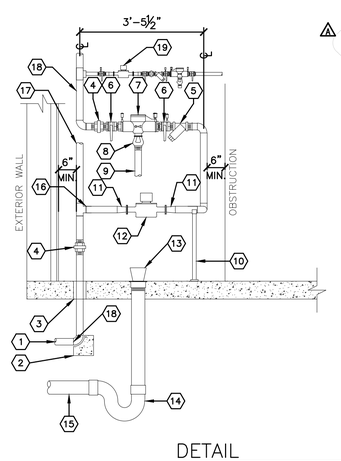

KEYED NOTES:
1. INCOMING UNDERGROUND WATER SERVICE SIZED PER FIRE PROTECTION CONTRACTOR'S HYDRAULIC CALCULATIONS
2. BLOCKING AT CHANGES IN DIRECTION
3. MINIMUM ½" ANNULAR CLEARANCE
4. UNION
5. BRONZE STRAINER
6. QUARTER–TURN BALL VALVE
7. REDUCED PRESSURE ZONE (RPZ) ASSEMBLY* REFER TO SHEET P4.2
8. AIR GAP FOR RELIEF VALVE
9. PIPING FROM AIR GAP TO FLOOR DRAIN
10. GALVANIZED STEEL PIPE SUPPORTS AS REQUIRED
11. 2"x1½" BUSHING
12. 1½" WATER METER**
13. FLOOR DRAIN–PITCH FLOOR TOWARDS DRAIN
14. P–TRAP
15. PIPE TO SEWER–PITCH AND VENT PER CODE
16. 2" PIPE FOR WATER SERVICE
17. PIPE FOR FIRE SPRINKLER SYSTEM SIZED PER FIRE PROTECTION CONTRACTOR'S HYDRAULIC CALCULATIONS
18. WATER PIPING FROM 5 FT. FROM BUILDING TO CEILING PENETRATION SHALL BE COPPER.
19. 1" IRRIGATION SYSTEM, 1" SEWER DEDUCT METER AND RPZ BACKFLOW ASSEMBLY.

*RPZ BASED ON WATTS MODEL 009QT–S
**WATER METER BASED ON NEPTUNE MODEL T–10

DETAIL 7 / P3.0
INCOMING WATER SERVICE WITH RPZ, METER AND FIRE SPRINKLER
SCALE: ½"=1'–0"

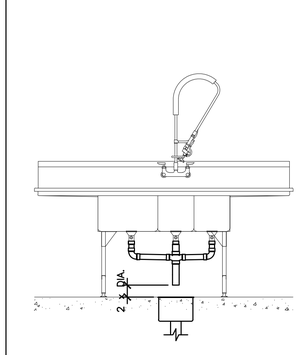

DETAIL 8 / P3.0
INDIRECT DRAINAGE PIPING (TYP.)
SCALE: ½"=1'–0"

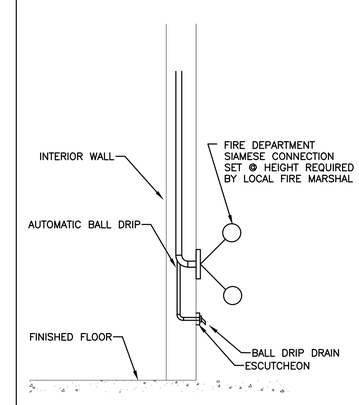

DETAIL 9 / P3.0
FIRE DEPARTMENT CONNECTION
WHEN REQUIRED BY FIRE MARSHAL

REV	DATE	DESCRIPTION	BY
-	-	-	-
-	-	-	-
4	12/03/20	SERVICE AREA OPTIMIZATION	WLW
3	11/13/20	USRD SAO SET REVIEW	WLW
2	05/05/20	CIVIL & PLAN REVIEW COMMENTS	WLW
1	01/23/20	PERMIT SET	WLW
-	01/13/20	USRD PROGRESS SET REVIEW	WLW

emanuelson-podas
consulting engineers
Emanuelson-Podas, Inc.
7705 Bush Lake Road
Edina, MN 55439
(952) 930-0050 | www.epinc.com

3801.0037

MICHAEL WEBERT LICENSED 17648 KANSAS PROFESSIONAL ENGINEER

PREPARED BY: 12/03/20

PREPARED FOR: McDonald's USA, LLC

©2020 McDonald's USA, LLC
These drawings and specifications are the confidential and proprietary property of McDonald's USA, LLC and shall not be copied or reproduced without written authorization. The contract documents were prepared for use on this specific site in conjunction with its issue date and McDonald's USA, LLC standards in effect at that time. Modifications to these drawings for reference or example on another project requires the services of properly licensed architects and engineers. Reproduction of the contract documents for reuse on another project is not authorized.

DRAWN BY: MJW
STD ISSUE DATE: 2019_11
REVIEWED BY: WLW
DATE ISSUED: 01–23–20
RQ#19175

TITLE: 2019 STANDARD BUILDING – BB20 4597F10–WOOD/WOOD

DESCRIPTION
WOOD BEARING WALLS W/FIBER CEMENT SIDING & CI
WOOD ROOF TRUSS FRAMING
FIBER CEMENT PANEL/BATTEN/ALPOLIC PANEL/BRICK EXT. FINISH

SITE ID: 015–0071
SITE ADDRESS: 605 SOUTH 7TH STREET, KANSAS CITY, KS

SHEET NO.: 015–0071.00.B
P3.0
DETAILS