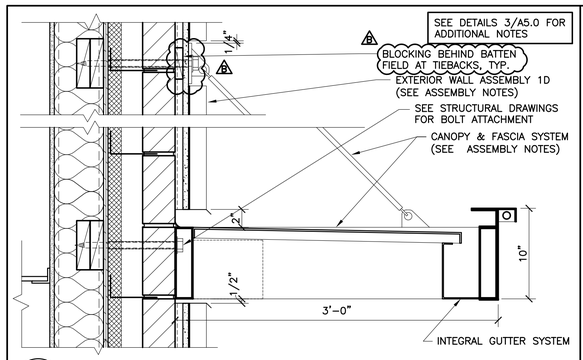

1 / A5.3 **DETAIL– CANOPY @ BATTENS**
1 1/2" = 1'-0"

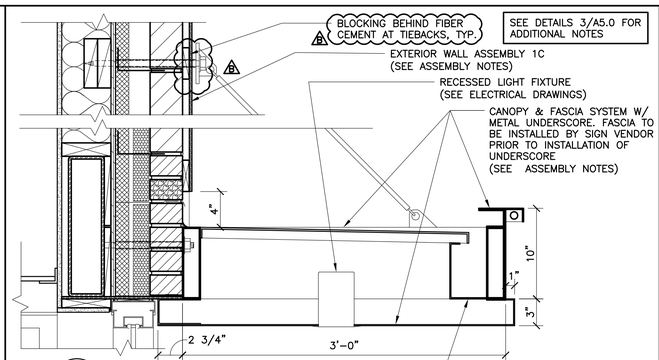

2 / A5.3 **DETAIL– CANOPY @ WINDOW HEAD**
1 1/2" = 1'-0"

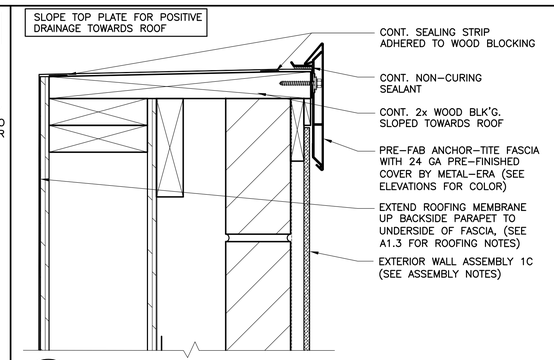

3 / A5.3 **DETAIL– FASCIA @ FIBER CEMENT PANEL PARAPET**
3" = 1'-0"

4 / A5.3 **NOT USED**
–

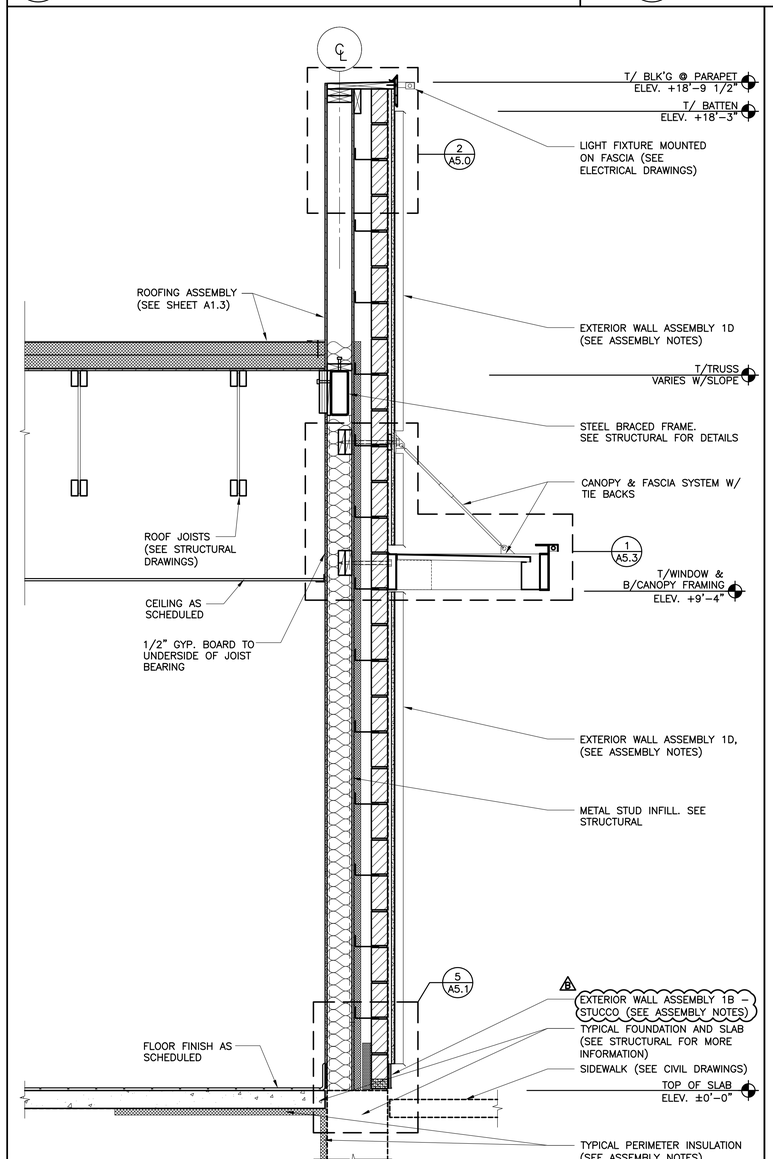

5 / A5.3 **WALL SECTION – FRONT CORNER BATTEN**
3/4" = 1'-0"

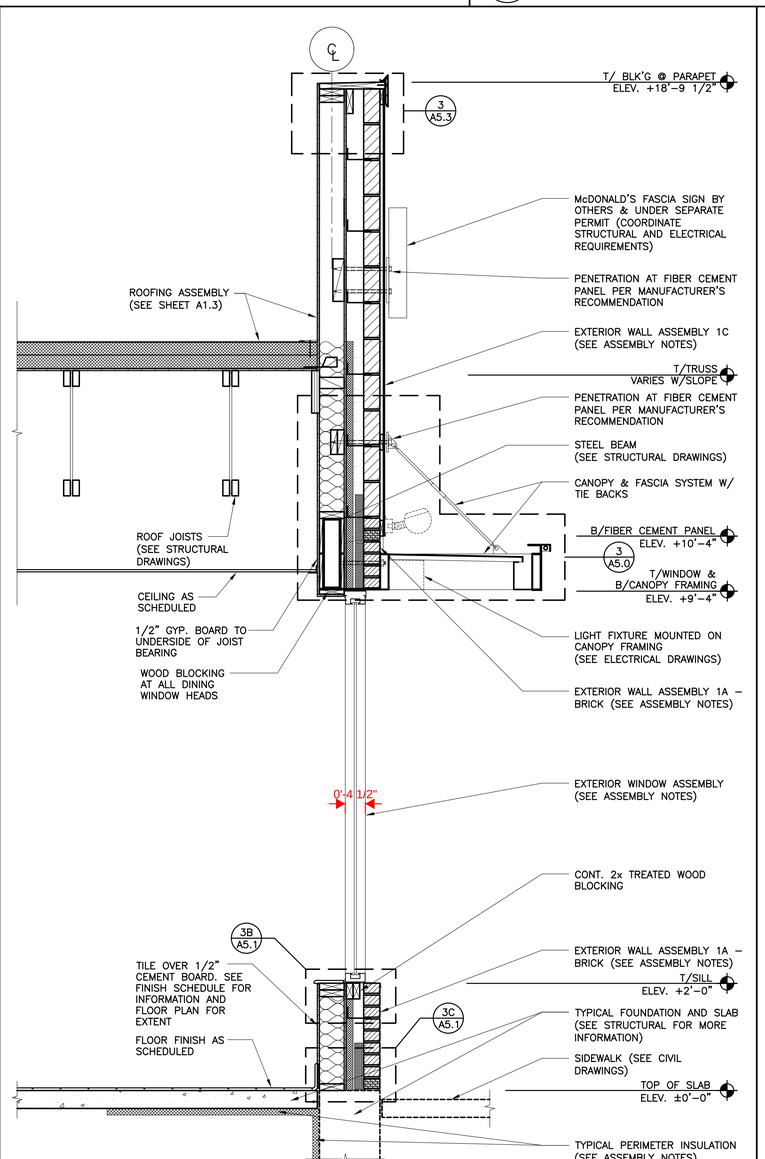

6 / A5.3 **WALL SECTION – STORE FRONT (FRONT)**
3/4" = 1'-0"

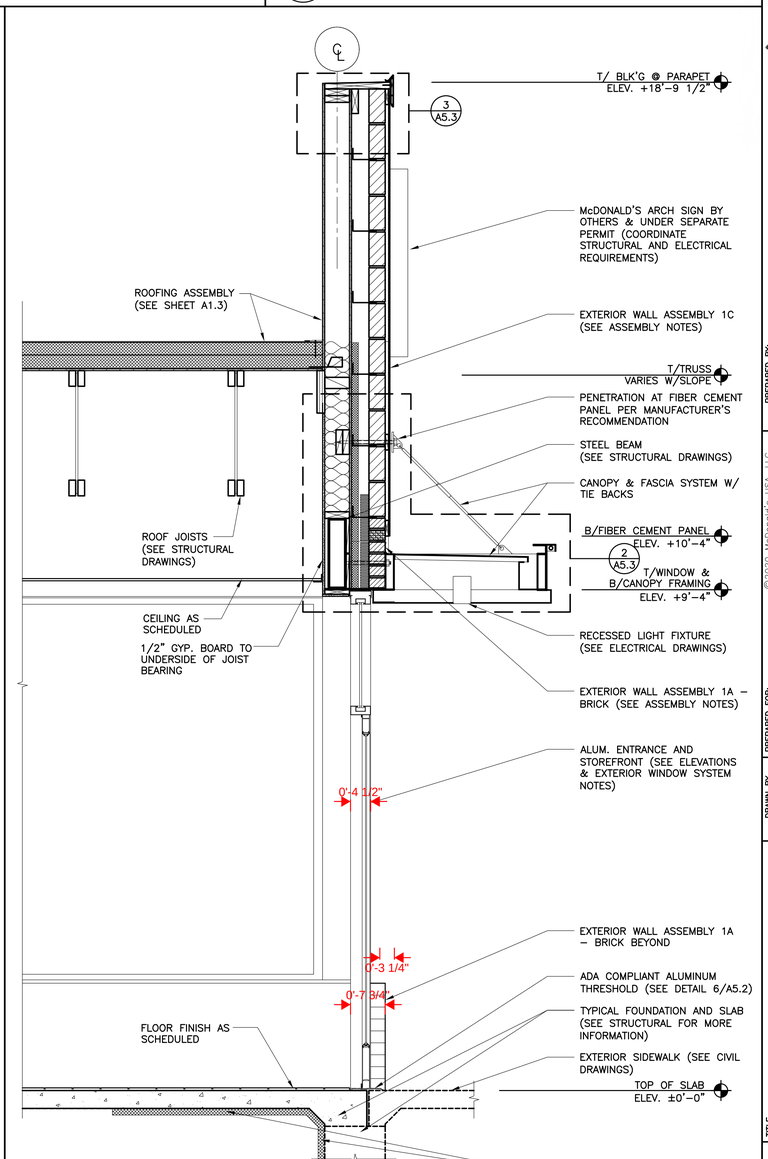

7 / A5.3 **WALL SECTION – FRONT ENTRANCE**
3/4" = 1'-0"

REV	DATE	DESCRIPTION	BY
-	-	-	-
-	-	-	-
B	12/03/20	SERVICE AREA OPTIMIZATION	DIA
-	11/13/20	USRD SAO SET REVIEW	DIA
A	05/05/20	CIVIL & PLAN REVIEW COMMENTS	DIA
-	01/23/20	PERMIT SET	DIA
-	01/13/20	USRD PROGRESS SET REVIEW	DIA

I hereby certify that this plan, specification or report was prepared by me or under my direct supervision and that I am a duly registered ARCHITECT under the laws of the State of Kansas.

Signature
12/03/20
Date
Registration Number

PREPARED BY:
reprise DESIGN
Architecture, INC.
ARCHITECTURE & PLANNING
12400 PORTLAND AVENUE SOUTH, SUITE 100
BURNSVILLE, MN 55337
EMAIL: DATA@REPRISEDESIGN.COM
PHONE: (952) 252–4042
FAX: (952) 252–4043

PREPARED FOR:
McDonald's USA, LLC

©2020 McDonald's USA, LLC
These drawings and specifications are the confidential and proprietary property of McDonald's USA, LLC and shall not be copied or reproduced without written authorization. The contract documents were prepared for use on this specific site in connection with a McDonald's restaurant. Any reuse on a different site or at a later time. Use of these drawings for reference, or example, on another project requires the services of a licensed architect and professional staff to prepare contract documents for reuse on another project is not authorized.

DRAWN BY DIA
STD ISSUE DATE 2019_11
REVIEWED BY KD
DATE ISSUED 01/23/20
RQ#19175

TITLE
2019 STANDARD BUILDING – BB20
4597F10–WOOD/WOOD
DESCRIPTION
WOOD BEARING WALLS W/FIBER CEMENT SIDING & CI
WOOD ROOF TRUSS FRAMING
FIBER CEMENT PANEL/BATTEN/ALPOLIC PANEL/BRICK EXT. FINISH
SITE ID 015–0071
SITE ADDRESS 605 SOUTH 7TH STREET, KANSAS CITY, KS

SHEET NO.
015–0071.00.B
A5.3
WALL SECTIONS