SEQUENCE OF OPERATION:

1. TURNING "ON" ANY PIECE OF COOKING EQUIPMENT UNDER A HOOD WILL TURN ON THE EXHAUST FAN FOR THAT HOOD.
2. TURNING "OFF" THE LAST PIECE OF COOKING EQUIPMENT UNDER A HOOD WILL TURN OFF THE EXHAUST FAN FOR THAT HOOD.
3. IF THE ANSUL SYSTEM SHOULD DISCHARGE WHILE THE COOKING EQUIPMENT AND EXHAUST FAN ARE OPERATING, THE COOKING EQUIPMENT WILL BE SHUT OFF, BUT THE EXHAUST FAN WILL CONTINUE TO RUN AND WILL FORCE THE ROOFTOP UNITS INTO A "SCHEDULED" MODE (CONTROLLED BY THE THERMOSTAT).
4. THE ANSUL SYSTEM MUST BE RECHARGED AND MANUALLY RESET BEFORE THE COOKING EQUIPMENT WILL AGAIN BE ABLE TO OPERATE.
5. THE ON/OFF SWITCH ON THE EXHAUST FAN IS NORMALLY KEPT IN THE "ON" POSITION. IF IT IS TURNED OFF FOR SERVICE, THE COOKING EQUIPMENT WILL TURN OFF AND NOT BE ABLE TO OPERATE UNTIL THE EXHAUST FAN ON/OFF SWITCH IS AGAIN TURNED ON.

INTERLOCK DIAGRAM LEGEND

- TERMINAL BLOCK IN CHASE
- CTB – CHASE TERMINAL BLOCK. PROVIDED AND INSTALLED BY KITCHEN EQUIPMENT SUPPLIER
- ETB – EQUIPMENT TERMINAL BLOCK
- EFCR – EXHAUST FAN / MAKE UP AIR CONTROL RELAY. PROVIDED BY CONTRACTOR.
- IGR – INTERNAL GRILL RELAY PROVIDED WITHIN GARLAND GRILLS
- MS – ANSUL MICROSWITCH PROVIDED BY KITCHEN EQUIPMENT SUPPLIER
- CONTROL CORD PLUG & RECEPTACLE
- FIELD WIRING
- CONTROL CORD/INTERNAL WIRING
- FACTORY WIRING
- EQUIPMENT OR ENCLOSURE

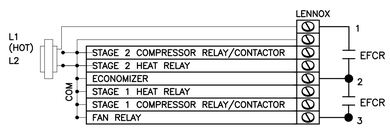

TYPICAL HVAC UNIT
VERIFY EXACT REQUIREMENTS ON FIELD

COOKING EQUIPMENT EXHAUST FAN	MAKE UP PROVIDED BY
EF/1	RTU–3
EF/2	RTU–1
EF/3	RTU–2

NOTE
RTU # ASSOCIATED WITH EACH EXHAUST FAN BASED ON PROTOTYPICAL VALUES ONLY. VERIFY THAT EXHAUST FAN ACTIVATES THE CORRESPONDING RTU TO PROVIDE AN ADEQUATE AMOUNT OF MAKEUP AIR.

1 / E-3.2 **MAKE-UP AIR HVAC CONNECTION**
FOR REFERENCE ONLY

REVISED: 6/18

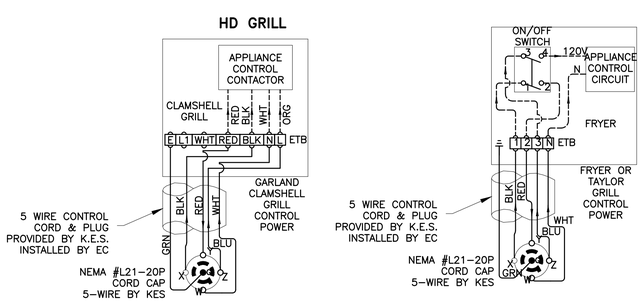

4 / E-3.2 **CONTROL CORD CONNECTION**
FOR REFERENCE ONLY

REVISED: 6/18

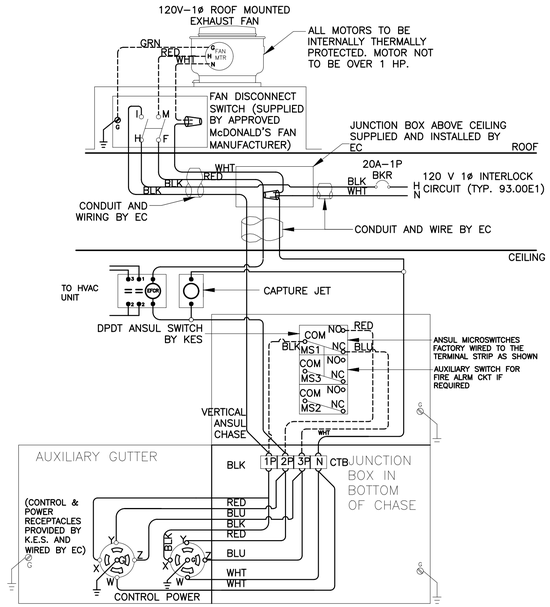

2 / E-3.2 **INTERLOCK WIRING DIAGRAM FOR EXHAUST FAN AND COOKING EQUIPMENT**
FOR REFERENCE ONLY

REVISED: 6/18

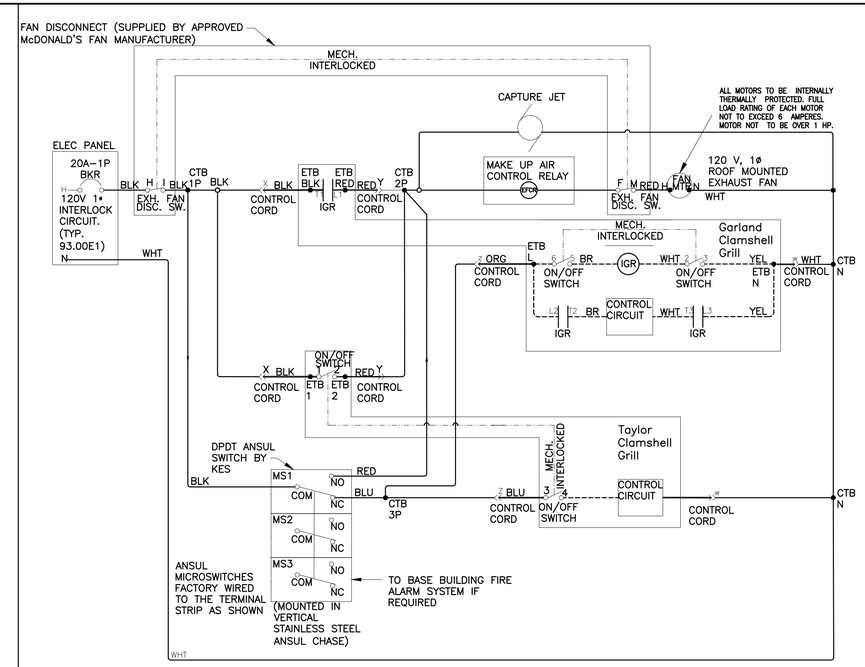

3 / E-3.2 **INTERLOCK LADDER DIAGRAM**
FOR REFERENCE ONLY

REVISED: 6/18

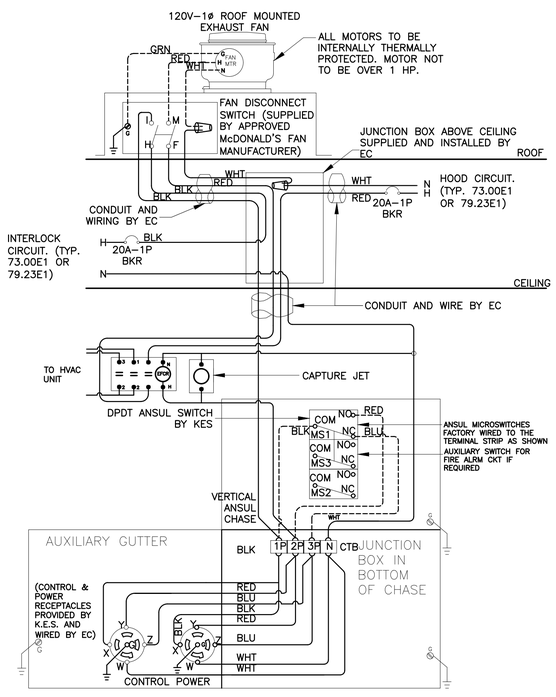

5 / E-3.2 **INTERLOCK WIRING DIAGRAM FOR EXHAUST FAN AND COOKING EQUIPMENT**
FOR REFERENCE ONLY

REVISED: 6/18

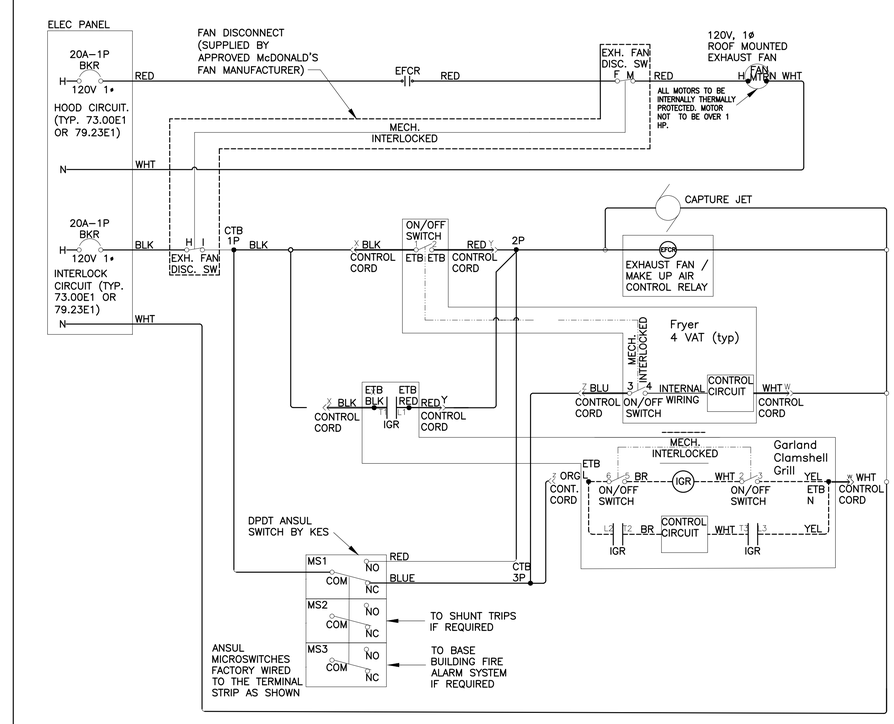

6 / E-3.2 **INTERLOCK LADDER DIAGRAM**
FOR REFERENCE ONLY

REVISED: 6/18

REV	DATE	DESCRIPTION	BY
-	01/23/20	PERMIT SET	WLW
-	01/13/20	USRD PROGRESS SET REVIEW	WLW

emanuelson-podas consulting engineers
Emanuelson-Podas, Inc.
705 Bush Lake Road
Eden Prairie, MN 55347
(952) 930-0050 | www.epinc.com
3801.0037

MICHAEL WEBERT LICENSED 17648 KANSAS PROFESSIONAL ENGINEER

01/23/20

PREPARED BY:

© 2020 McDonald's USA, LLC

PREPARED FOR: McDonald's USA, LLC

These drawings and specifications are the confidential and proprietary property of McDonald's USA, LLC and shall not be copied or reproduced without written authorization. The contract documents were prepared for use on this specific site in conjunction with its issue date and are fitted to site specific conditions. Use of, or reliance upon, all or portions of these drawings for reference or example on another project requires the services of properly licensed architects and engineers. Reproduction of the contract documents for reuse on another project is not authorized.

DRAWN BY	STD ISSUE DATE	REVIEWED BY	DATE ISSUED
WRW	2019_11	WLW	01-23-20

TITLE: 2019 STANDARD BUILDING – BB20
4597F10–WOOD/WOOD

DESCRIPTION: WOOD BEARING WALLS W/FIBER CEMENT SIDING & CI WOOD ROOF TRUSS FRAMING FIBER CEMENT PANEL/BATTEN/ALPOLIC PANEL/BRICK EXT. FINISH

SITE ID: 015–0071 | SITE ADDRESS: 605 SOUTH 7TH STREET, KANSAS CITY, KS | RD#19175

SHEET NO. 015–0071.00.0
E3.2
WIRING DETAILS