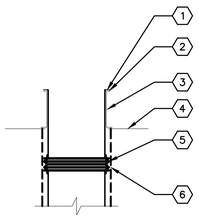

KEYED NOTES:
1. SHEET METAL DUCT DROP (SUPPLY, RETURN OR EXHAUST)
2. FOAM GASKET BETWEEN DUCT AND CURB
3. ROOF CURB
4. ROOF LINE
5. 6" FACE–TO–FACE CANVAS FLEXIBLE CONNECTION
6. 2" EXTERIOR INSULATION (SUPPLY AND RETURN)

DETAIL 1 / M3.0
DUCT DROP INSTALLATION
SCALE: NONE

DETAIL 2 / M3.0
NOT USED

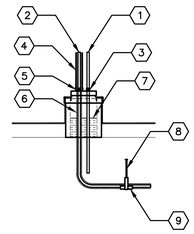

KEYED NOTES:
1. REFRIGERANT LIQUID LINE
2. REFRIGERANT SUCTION LINE WITH 2" THICK EXTERNAL FOAM INSULATION (ARMAFLEX BY ARMACELL OR EQUAL)
3. STAINLESS STEEL CLAMP
4. APPLY WEATHERPROOFING OVER FOAM INSULATION (ALUMAGUARD BY POLYGUARD OR EQUAL)
5. WRAP FOAM INSULATION OVER PIPE PORTAL NIPPLE AND STAINLESS STEEL CLAMP
6. RESTART FOAM INSULATION IMMEDIATELY AFTER PIPE PORTAL PENETRATION
7. INSULATE BOTTOM OF ROOF PORTAL CURB (MIN. R–19)
8. PIPE HANGER
9. LIGHT GAUGE GALVANIZED STEEL PROTECTIVE SHIELD

DETAIL 3 / M3.0
REFRIGERANT PIPE INSTALLATION
SCALE: NONE

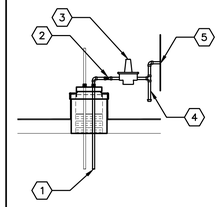

KEYED NOTES:
1. GAS PIPING
2. SHUT–OFF VALVE
3. PRESSURE REGULATOR (PROPERLY SIZED FOR APPLICATION)
4. DIRT LEG
5. ROOFTOP UNIT ENTRY

DETAIL 4 / M3.0
GAS PIPE INSTALLATION
SCALE: NONE

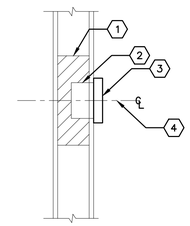

KEYED NOTES:
1. PROVIDE BATT INSULATION FOR TEMPERATURE SENSORS INSTALLED IN HOLLOW CAVITY WALLS
2. 2x4 ELECTRICAL BOX
3. SENSOR (TEMPERATURE, HUMIDITY OR CO2)
4. MOUNT SENSOR(S) BETWEEN 4'–0" TO 4'–6" A.F.F.

DETAIL 5 / M3.0
REMOTE SENSOR INSTALLATION
SCALE: NONE

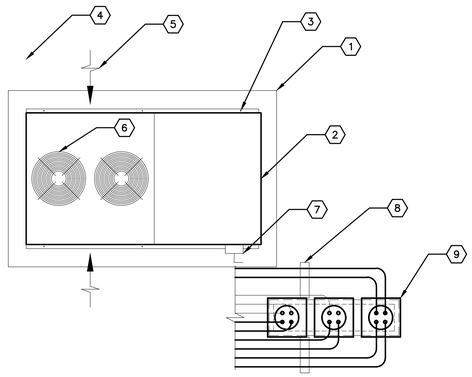

KEYED NOTES:
1. 90"x60"x14"H EQUIPMENT PLATFORM MANUFACTURED BY RPS OR EQUAL
2. 6'–6¾"x3'–8⅝"x2'–9⅞"H CONDENSING UNIT
3. FASTEN CONDENSING UNIT TO TOP OF PLATFORM AND SEAL FASTENER PENETRATIONS WITH UV RESISTANT SEALANT
4. OUTLINE OF SERVICE CLEARANCE EXTENDING 3'–0" FROM CONDENSING UNIT ON ALL SIDES
5. CONDENSER AIR INTAKE (BOTH SIDES)
6. CONDENSER FAN OUTLETS ON TOP OF UNIT
7. DISCONNECT SWITCH FURNISHED WITH UNIT
8. PROVIDE PIPE SUPPORT AS REQUIRED (TREATED LUMBER IS NOT ACCEPTABLE)
9. MULTIPLE PIPE PORTAL MANUFACTURED BY RPS OR EQUAL

CONDUIT SIZES:
(1) ¾" TO EVAPORATORS
(1) ¾" WITH TWO (2) 8 CONDUCTOR LV CLASS II CABLES TO THE EVAPORATORS
(1) ¾" TO ICE MACHINE

REFRIGERANT PIPING SIZES:
SEE MANUFACTURER'S INSTALLATION INSTRUCTIONS FOR RECOMMENDED REFRIGERANT PIPE SIZING

DETAIL 6 / M3.0
BOHN MAC 8X UNIT (CU–4)
SCALE: ½"=1'–0"

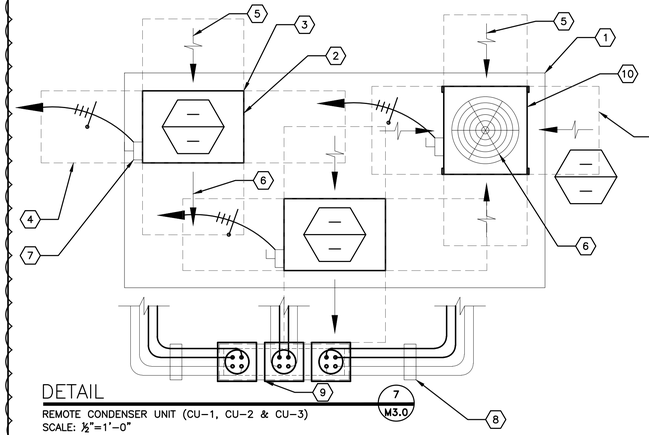

KEYED NOTES:
1. 141"x72"x14"H EQUIPMENT PLATFORM MANUFACTURED BY RPS OR EQUAL
2. 34"x24⅜"x25¾"H CONDENSING UNIT
3. FASTEN CONDENSING UNIT TO TOP OF PLATFORM AND SEAL FASTENER PENETRATIONS WITH UV RESISTANT SEALANT
4. OUTLINE OF SERVICE CLEARANCE EXTENDING FROM CONDENSING UNIT ON ALL SIDES
5. CONDENSER AIR INTAKE
6. CONDENSER FAN OUTLET
7. DISCONNECT SWITCH PROVIDED BY ELECTRICAL CONTRACTOR
8. PROVIDE PIPE SUPPORT AS NECESSARY (TREATED LUMBER IS NOT ACCEPTABLE)
9. MULTIPLE PIPE PORTAL MANUFACTURED BY RPS OR EQUAL
10. 29½"x28"x38"H CONDENSING UNIT

CONDUIT SIZES: (PER CONDENSING UNIT)
(1) ¾" POWER
(1) ¾" CONTROL

REFRIGERANT PIPING SIZES:
(PER CONDENSING UNIT)
ICE MACHINE – ½" LIQUID, ¾" SUCTION
(CU–3 CONDENSING UNIT)
ICE MACHINE – ⅜" LIQUID, ½" SUCTION

DETAIL 7 / M3.0
REMOTE CONDENSER UNIT (CU–1, CU–2 & CU–3)
SCALE: ½"=1'–0"

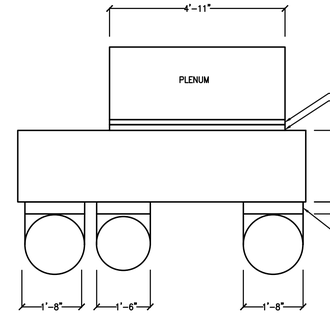

VIEW TOWARDS REAR OF KITCHEN AT DUCT DROPS

DETAIL 8 / M3.0
KITCHEN DUCTWORK
SCALE: NONE

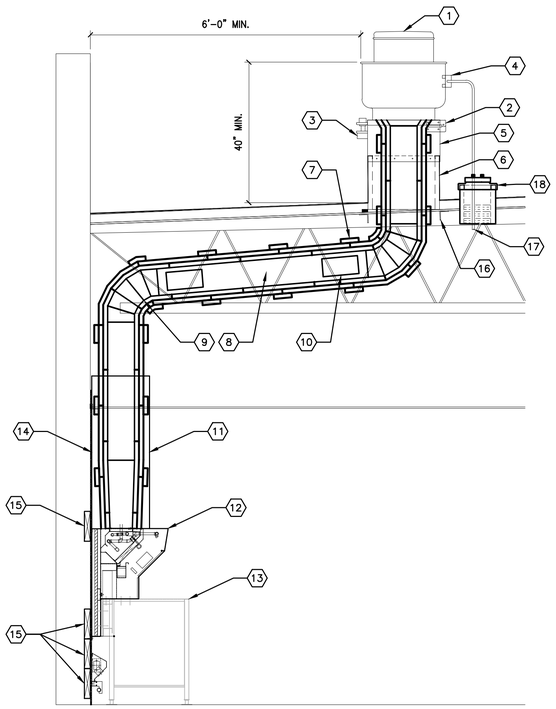

KEYED NOTES:
1. UPBLAST EXHAUST FAN (SEE EXHAUST FAN SCHEDULE)
2. HINGED CURB CAP FOR CLEANING ACCESS (FURNISHED WITH FAN)
3. GREASE TRAP (FURNISHED WITH FAN)
4. NEMA 3R DISCONNECT SWITCH (FURNISHED WITH FAN)
5. 12" HIGH CURB EXTENSION (FURNISHED WITH FAN)
6. 18" HIGH CURB (FURNISHED WITH FAN)
7. TWO (2) LAYERS OF 1½" THICK DUCT WRAP TO MEET ASTM E2336 INSTALLED PER MANUFACTURER'S INSTRUCTIONS (SEE MECHANICAL NOTES FOR INSULATION SPECIFICATION)
8. 16 GAUGE BLACK IRON (CARBON STEEL) OR 18 GAUGE STAINLESS STEEL DUCTWORK WELDED LIQUID–TIGHT
9. 5–GORE BLACK IRON (CARBON STEEL) RADIUS ELBOW
10. 12"x6" ACCESS DOOR AT ALL CHANGES IN DIRECTION
11. STAINLESS STEEL FASCIA PANEL TO PROTECT DUCTWORK AND INSULATION
12. BACKSHELF TYPE EXHAUST HOOD (SEE KITCHEN EXHAUST HOOD SCHEDULE)
13. COOKING APPLIANCE (SEE KITCHEN DRAWINGS)
14. REAR WALL CONSTRUCTION SHALL CONSIST OF CERAMIC TILE OR MIN. 22 GAUGE STAINLESS STEEL OVER ⅝" TYPE X GYPSUM BOARD OR ½" CEMENT BOARD FROM FLOOR TO CEILING AND EXTENDING 24" TO EACH SIDE OF THE HOOD INSTALLED ON NON–COMBUSTIBLE WALL (REFER TO SHEET A1.0 FOR MORE INFORMATION.
15. 2x10 LIGHT GAUGE STEEL FOR SUPPORT BLOCKING FOR HOOD AND RACEWAY (COORDINATE INSTALLATION WITH HOOD INSTALLER)
16. STRUCTURAL FRAMING FOR ROOF OPENING (SEE STRUCTURAL DRAWINGS)
17. TRANSITION TO FLEXIBLE CONDUIT UNDER ROOF PENETRATION WHERE ALLOWED BY CODE.
18. ROOF PIPE PORTAL, RPS–N18(1) RC–2A 12x12x11H.

SECTION 9 / M3.0
KITCHEN EXHAUST HOOD INSTALLATION
SCALE: ½"=1'–0"

KEYED NOTES:
1. OUTLINE OF ROOFTOP UNIT
2. ROOF CURB
3. SUPPLY AND RETURN AIR DUCT DROPS
4. ROOF OPENING

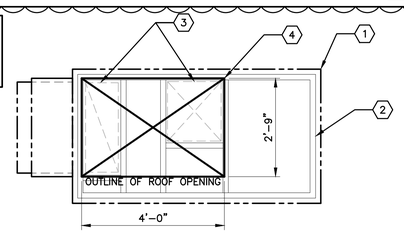

RTU–2 (6–TONS)

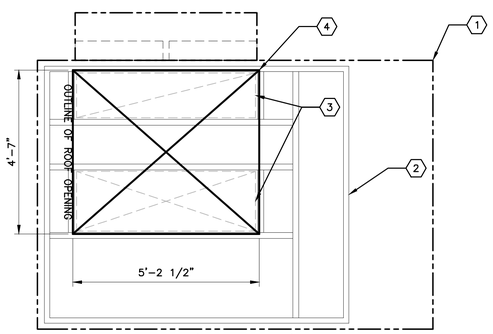

RTU–1 (20 TONS) &
RTU–3 (13–TONS)

DETAIL 10 / M3.0
ROOF OPENINGS
SCALE: ½"=1'–0"

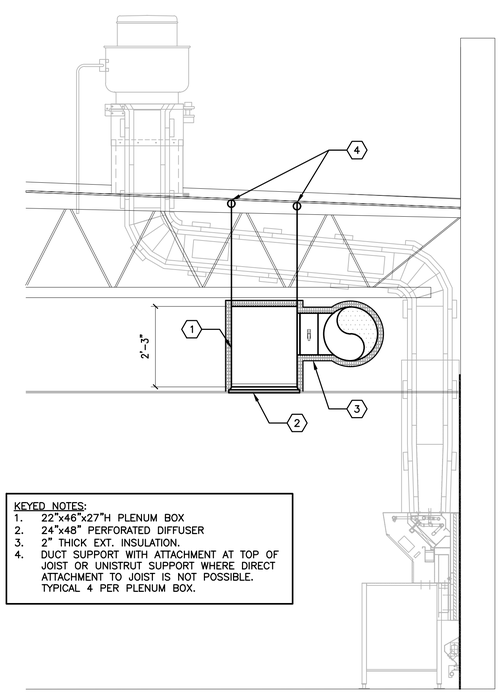

KEYED NOTES:
1. 22"x46"x27"H PLENUM BOX
2. 24"x48" PERFORATED DIFFUSER
3. 2" THICK EXT. INSULATION.
4. DUCT SUPPORT WITH ATTACHMENT AT TOP OF JOIST OR UNISTRUT SUPPORT WHERE DIRECT ATTACHMENT TO JOIST IS NOT POSSIBLE. TYPICAL 4 PER PLENUM BOX.

SECTION 11 / M3.0
SUPPLY (S–1) PLENUM INSTALLATION
SCALE: ½"=1'–0"

REV	DATE	DESCRIPTION	BY
A	12/03/20	SERVICE AREA OPTIMIZATION	WLW
-	11/13/20	USRD SAO SET REVIEW	WLW
B	05/05/20	CIVIL & PLAN REVIEW COMMENTS	WLW
-	01/23/20	PERMIT SET	WLW
-	01/13/20	USRD PROGRESS SET REVIEW	WLW

emanuelson-podas
consulting engineers
Emanuelson-Podas, Inc.
705 Bush Lake Road
Eden Prairie, MN 55347
(952) 930-0050 | www.epinc.com
3801.0037

MICHAEL WEBERT LICENSED 17648 KANSAS PROFESSIONAL ENGINEER

12/03/20

PREPARED BY:

PREPARED FOR: McDonald's USA, LLC

© 2020 McDonald's USA, LLC
These drawings and specifications are the confidential and proprietary property of McDonald's USA, LLC and shall not be copied or reproduced without written authorization. The contract documents were prepared for use on this specific site in conjunction with its issue date and are not suitable for use on another site or at a subsequent date. Reproduction of these drawings for reference or example on another project requires the services of properly licensed architects and engineers. Reproduction of the contract documents for reuse on another project is not authorized.

DRAWN BY: MJW
STD ISSUE DATE: 2019_11
REVIEWED BY: WLW
DATE ISSUED: 01–23–20
RQ#19175

TITLE: 2019 STANDARD BUILDING – BB20
4597F10–WOOD/WOOD

DESCRIPTION:
WOOD BEARING WALLS W/FIBER CEMENT SIDING & CI
WOOD ROOF TRUSS FRAMING
FIBER CEMENT PANEL/BATTEN/ALPOLIC PANEL/BRICK EXT. FINISH

SITE ID: 015–0071
SITE ADDRESS: 605 SOUTH 7TH STREET, KANSAS CITY, KS

SHEET NO. 015–0071.00.B
M3.0
DETAILS