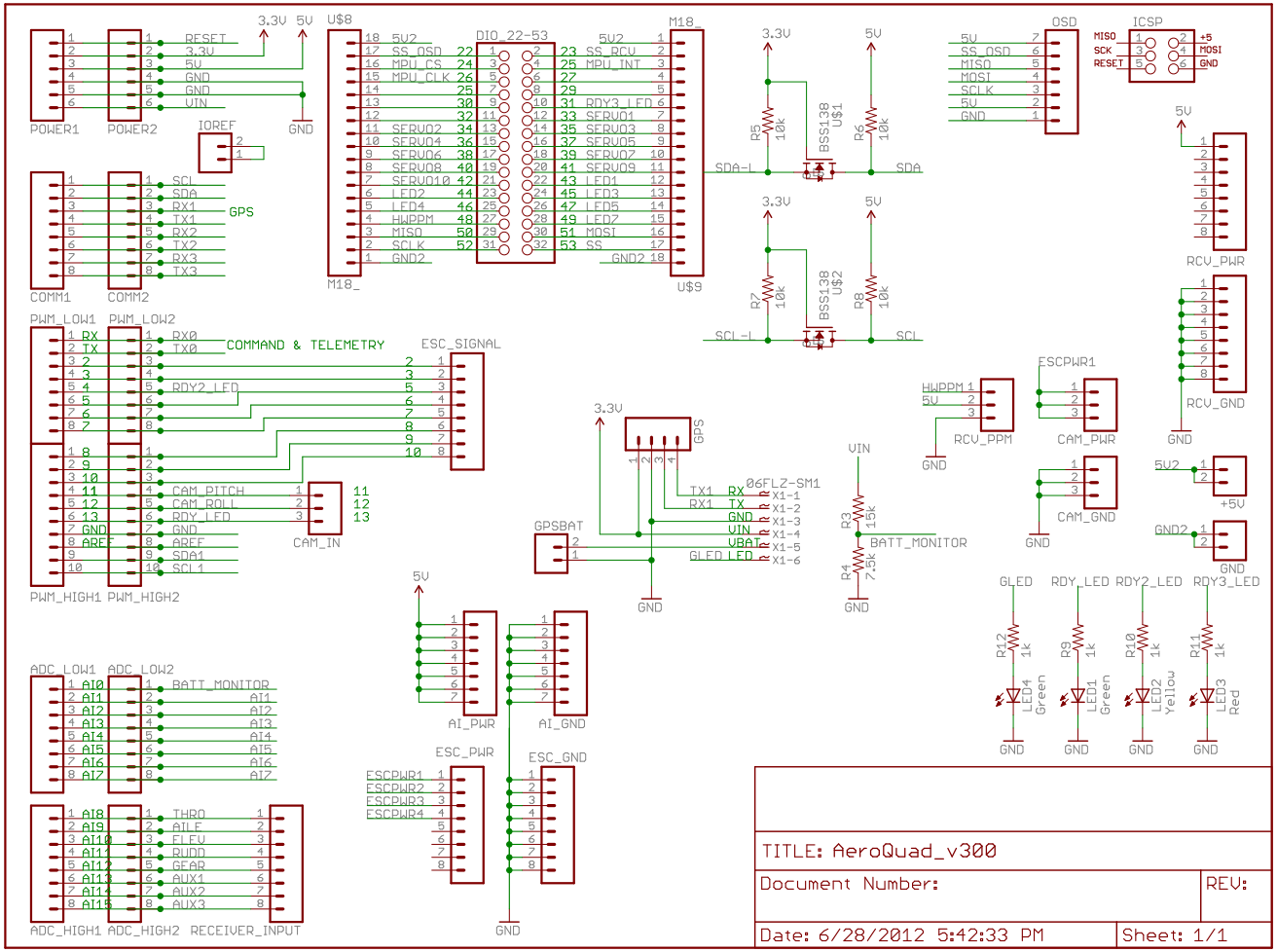
POWER1
POWER2
RESET
3.3V
5V
GND
VIN
IOREF
COMM1
COMM2
SCL
SDA
RX1
TX1
RX2
TX2
RX3
TX3
GPS
U$8
M18_
DIO_22-53
U$9
5V2
SS_OSD
MPU_CS
MPU_CLK
SERVO2
SERVO4
SERVO6
SERVO8
SERVO10
LED2
LED4
HWPPM
MISO
SCLK
GND2
SS_RCV
MPU_INT
RDY3_LED
SERVO1
SERVO3
SERVO5
SERVO7
SERVO9
LED1
LED3
LED5
LED7
MOSI
SS
R5 10k
R6 10k
R7 10k
R8 10k
BS138 U$1
BS138 U$2
SDA-L
SDA
SCL-L
SCL
OSD
ICSP
MISO
SCK
RESET
+5
MOSI
GND
RCV_PWR
RCV_GND
PWM_LOW1
PWM_LOW2
RX0
TX0
COMMAND & TELEMETRY
ESC_SIGNAL
RDY2_LED
CAM_PITCH
CAM_ROLL
RDY_LED
AREF
SDA1
SCL1
CAM_IN
PWM_HIGH1
PWM_HIGH2
HWPPM
RCV_PPM
ESCPWR1
CAM_PWR
CAM_GND
5V2
+5V
GND2
GPS
TX1
RX1
06FLZ-SM1
X1-1
X1-2
X1-3
X1-4
X1-5
X1-6
GPSBAT
VBAT
GLED
BATT_MONITOR
R3 15k
R4 7.5k
GLED
RDY_LED
RDY2_LED
RDY3_LED
R12 1k
R9 1k
R10 1k
R11 1k
LED4 Green
LED1 Green
LED2 Yellow
LED3 Red
ADC_LOW1
ADC_LOW2
BATT_MONITOR
AI0
AI1
AI2
AI3
AI4
AI5
AI6
AI7
AI_PWR
AI_GND
ESC_PWR
ESC_GND
ESCPWR1
ESCPWR2
ESCPWR3
ESCPWR4
ADC_HIGH1
ADC_HIGH2
RECEIVER_INPUT
THRO
AILE
ELEV
RUDD
GEAR
AUX1
AUX2
AUX3
TITLE: AeroQuad_v300
Document Number:
REV:
Date: 6/28/2012 5:42:33 PM
Sheet: 1/1

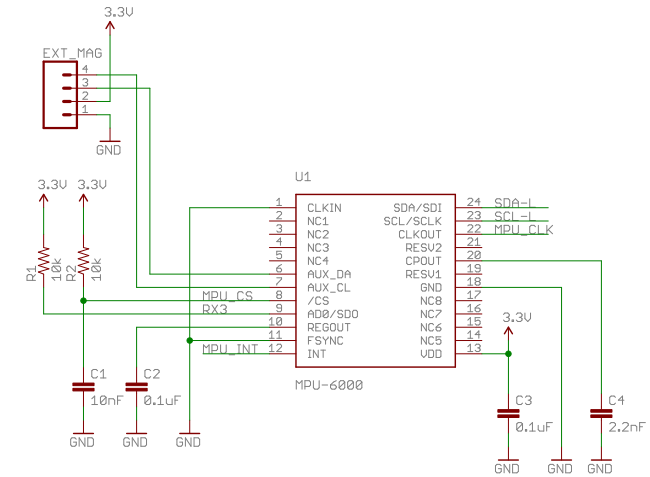
3.3V
EXT_MAG
GND
U1
CLKIN
NC1
NC2
NC3
NC4
AUX_DA
AUX_CL
/CS
AD0/SDO
REGOUT
FSYNC
INT
SDA/SDI
SCL/SCLK
CLKOUT
RESV2
CPOUT
RESV1
GND
NC8
NC7
NC6
NC5
VDD
SDA-L
SCL-L
MPU_CLK
MPU_CS
RX3
MPU_INT
R1 10k
R2 10k
C1 10nF
C2 0.1uF
C3 0.1uF
C4 2.2nF
MPU-6000

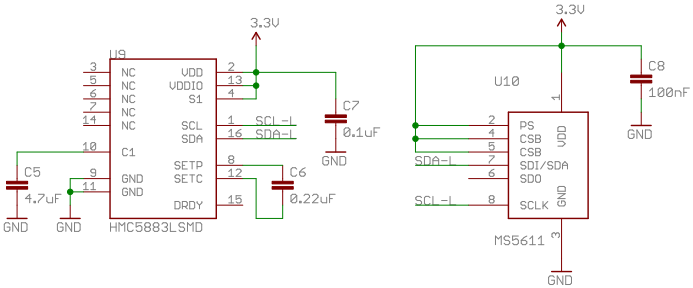
3.3V
U9
NC
VDD
VDDIO
S1
SCL
SDA
SETP
SETC
DRDY
C1
GND
SCL-L
SDA-L
C5 4.7uF
C6 0.22uF
C7 0.1uF
HMC5883LSMD
U10
PS
CSB
SDI/SDA
SDO
SCLK
VDD
C8 100nF
MS5611