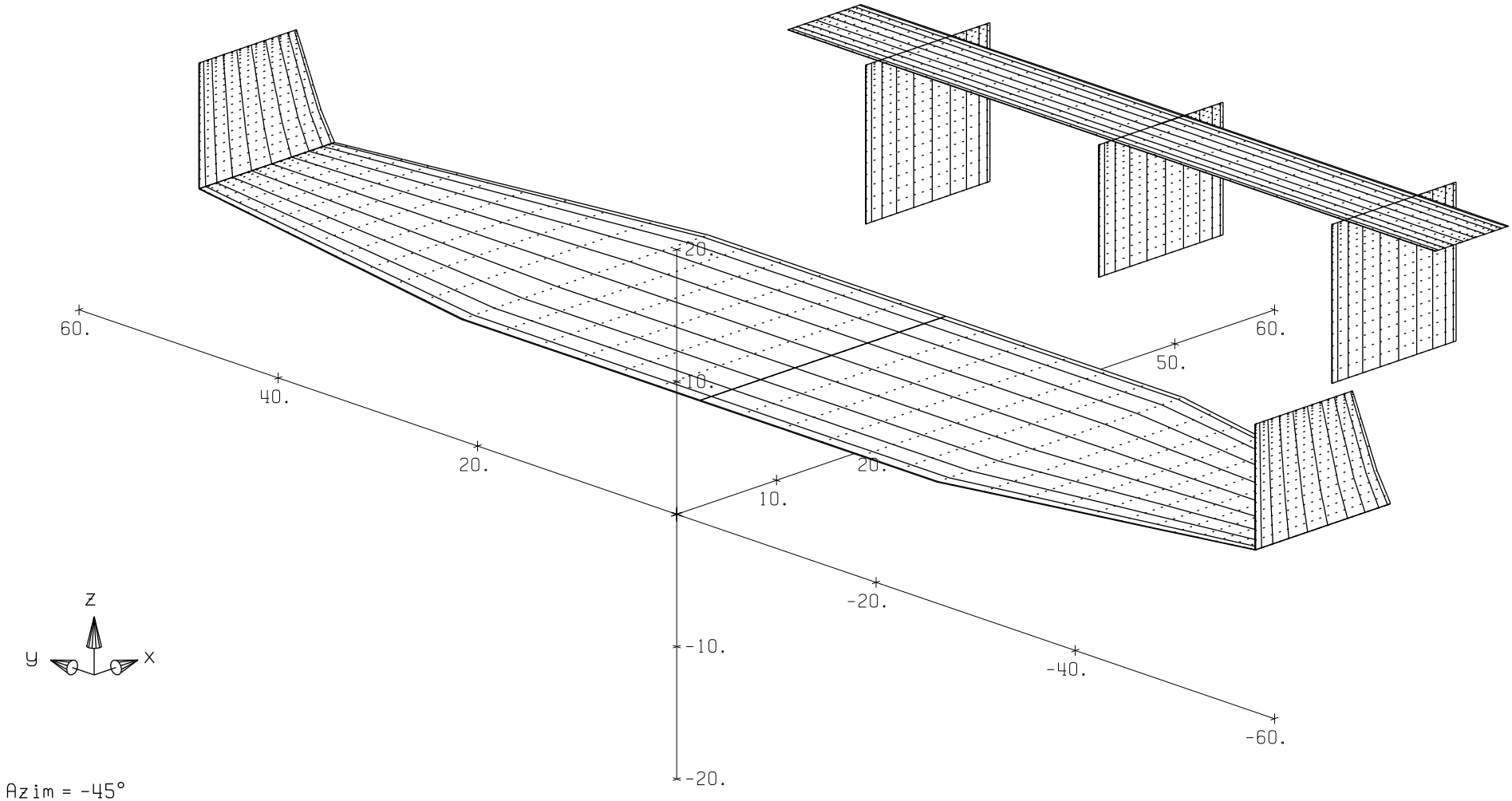

Azim = -45°
Elev = 20°

AVL 3.28 AeroCats_2014

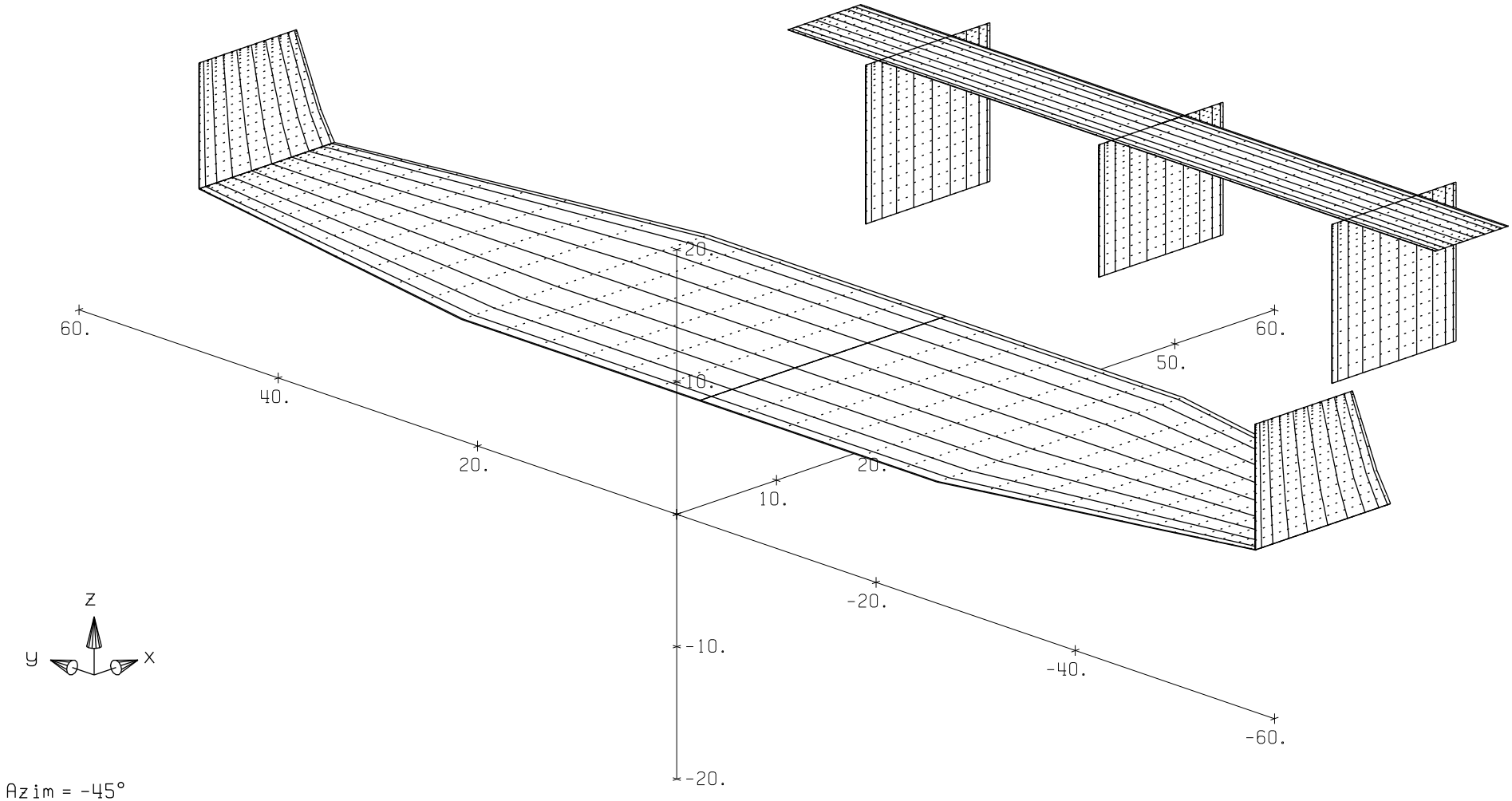

Azim = -45°
Elev = 20°

AVL 3.28 AeroCats_2014