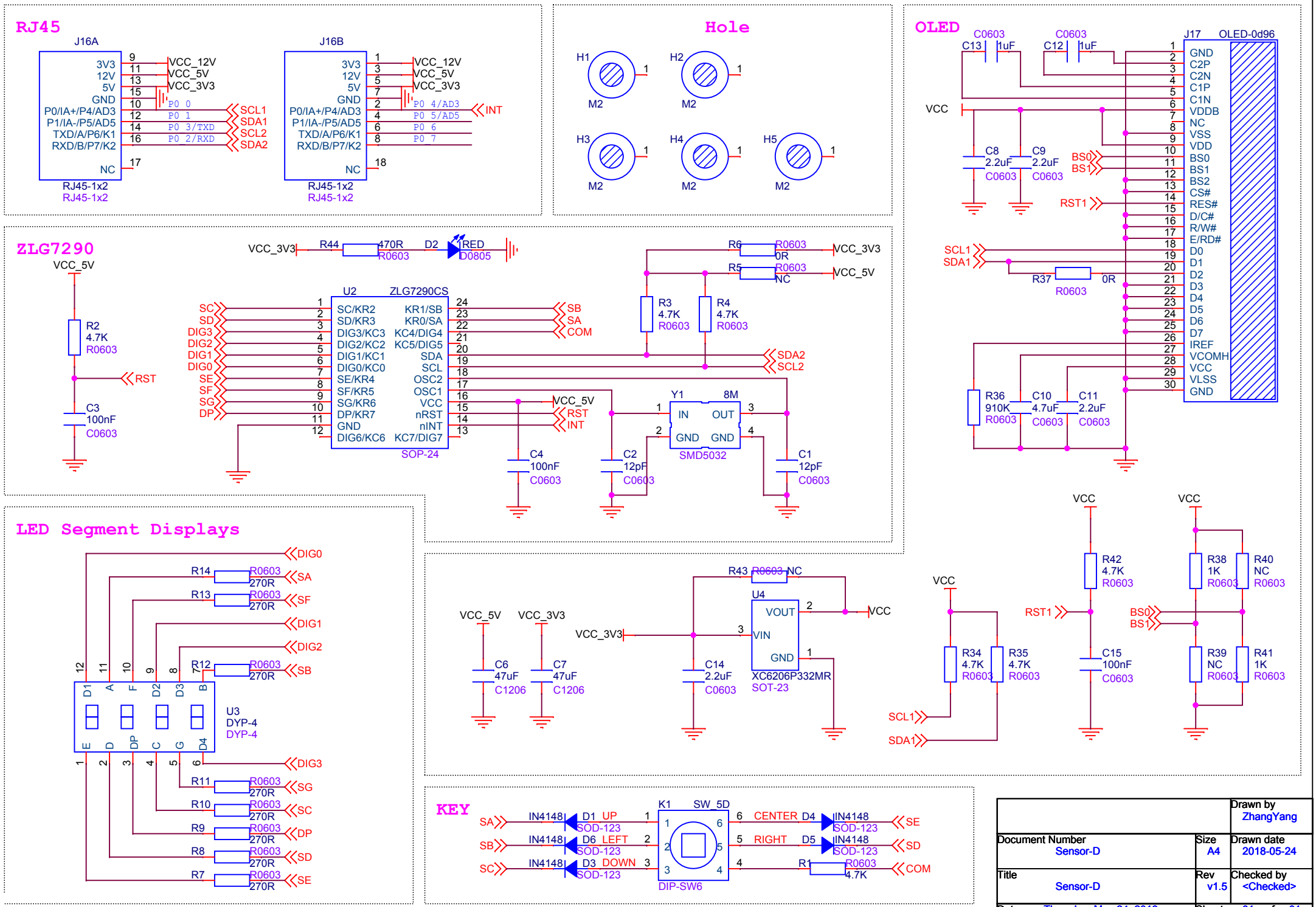
RJ45
J16A
3V3
12V
5V
GND
P0/IA+/P4/AD3
P1/IA-/P5/AD5
TXD/A/P6/K1
RXD/B/P7/K2
NC
VCC_12V
VCC_5V
VCC_3V3
P0 0
P0 1
P0 3/TXD
P0 2/RXD
SCL1
SDA1
SCL2
SDA2
RJ45-1x2
J16B
P0 4/AD3
P0 5/AD5
P0 6
P0 7
INT
Hole
H1
H2
H3
H4
H5
M2
OLED
C0603
C13 1uF
C12 1uF
J17
OLED-0d96
GND
C2P
C2N
C1P
C1N
VDDB
NC
VSS
VDD
BS0
BS1
BS2
CS#
RES#
D/C#
R/W#
E/RD#
D0
D1
D2
D3
D4
D5
D6
D7
IREF
VCOMH
VCC
VLSS
C8 2.2uF
C9 2.2uF
RST1
R37 0R
R36 910K
C10 4.7uF
C11 2.2uF
ZLG7290
VCC_5V
R2 4.7K
C3 100nF
R44 470R
D2 RED
D0805
U2
ZLG7290CS
SC/KR2
SD/KR3
DIG3/KC3
DIG2/KC2
DIG1/KC1
DIG0/KC0
SE/KR4
SF/KR5
SG/KR6
DP/KR7
DIG6/KC6
KR1/SB
KR0/SA
KC4/DIG4
KC5/DIG5
SDA
SCL
OSC2
OSC1
nRST
nINT
KC7/DIG7
SOP-24
SB
SA
COM
R6 0R
R5 NC
R3 4.7K
R4 4.7K
Y1 8M
IN
OUT
GND
SMD5032
C4 100nF
C2 12pF
C1 12pF
LED Segment Displays
DIG0
DIG1
DIG2
DIG3
R14 270R
R13 270R
R12 270R
R11 270R
R10 270R
R9 270R
R8 270R
R7 270R
U3
DYP-4
R43 NC
U4
VOUT
VIN
XC6206P332MR
SOT-23
C6 47uF
C7 47uF
C14 2.2uF
R34 4.7K
R35 4.7K
R42 4.7K
C15 100nF
R38 1K
R40 NC
R39 NC
R41 1K
KEY
K1
SW_5D
DIP-SW6
IN4148
D1 UP
D6 LEFT
D3 DOWN
CENTER D4
RIGHT D5
R1 4.7K
SOD-123
Drawn by
ZhangYang
Document Number
Sensor-D
Size
A4
Drawn date
2018-05-24
Title
Sensor-D
Rev
v1.5
Checked by
<Checked>
Date: Thursday, May 24, 2018
Sheet 01 of 01