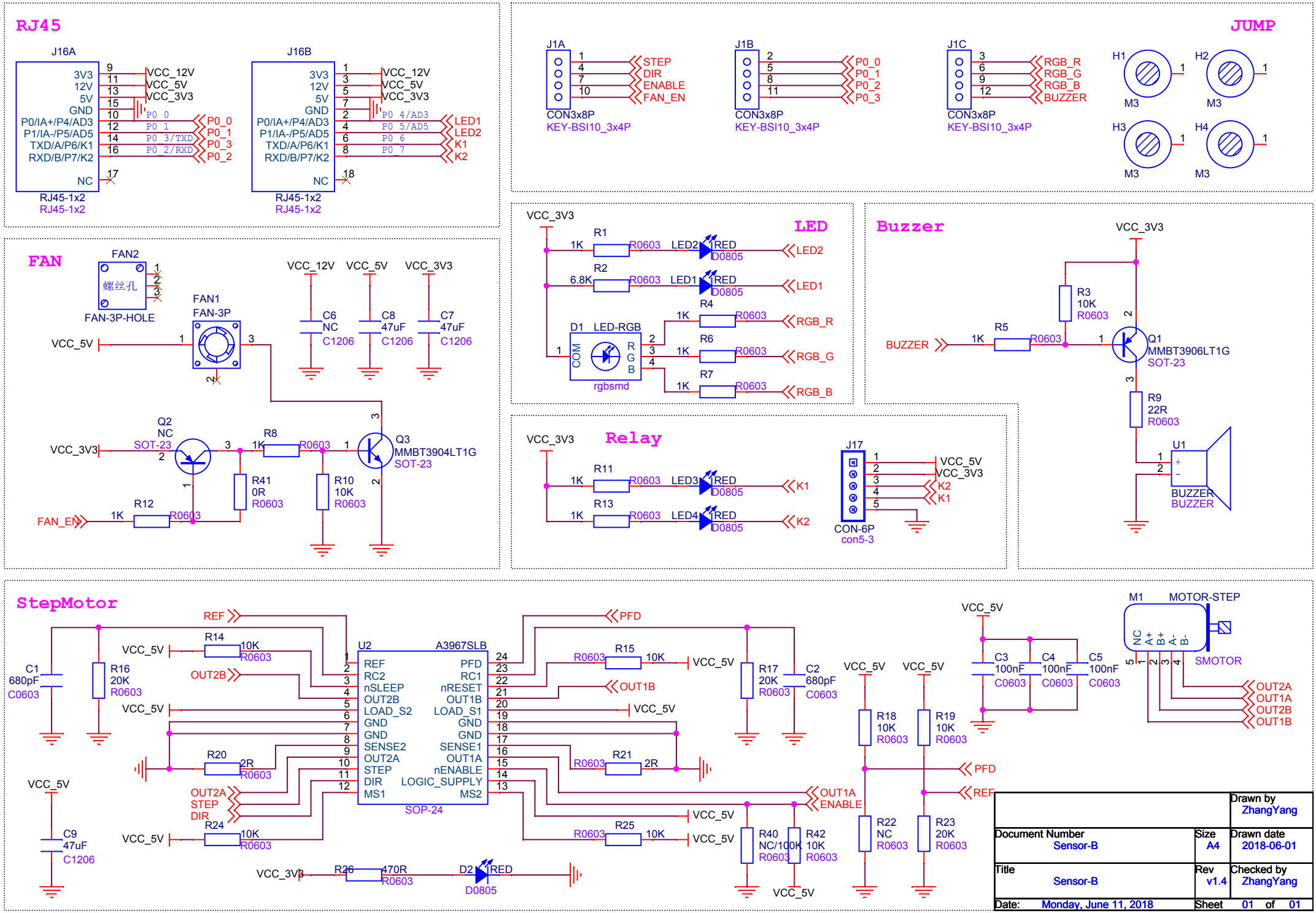
RJ45
J16A
3V3
12V
5V
GND
P0/IA+/P4/AD3
P1/IA-/P5/AD5
TXD/A/P6/K1
RXD/B/P7/K2
NC
RJ45-1x2
VCC_12V
VCC_5V
VCC_3V3
P0_0
P0_1
P0_3
P0_2
J16B
P0_4/AD3
P0_5/AD5
P0_6
P0_7
LED1
LED2
K1
K2
JUMP
J1A
STEP
DIR
ENABLE
FAN_EN
CON3x8P
KEY-BSI10_3x4P
J1B
J1C
RGB_R
RGB_G
RGB_B
BUZZER
H1
H2
H3
H4
M3
FAN
FAN2
螺丝孔
FAN-3P-HOLE
FAN1
FAN-3P
C6
NC
C1206
C8
47uF
C7
Q2
SOT-23
R8
1K
R0603
Q3
MMBT3904LT1G
R41
0R
R10
10K
R12
LED
R1
R2
6.8K
LED1
LED2
D1
LED-RGB
COM
rgbsmd
R4
R6
R7
Buzzer
R3
R5
Q1
R9
22R
U1
Relay
R11
R13
LED3
LED4
J17
CON-6P
con5-3
StepMotor
REF
PFD
OUT2B
OUT1B
OUT1A
ENABLE
OUT2A
STEP
DIR
U2
A3967SLB
SOP-24
REF
RC2
nSLEEP
OUT2B
LOAD_S2
GND
SENSE2
OUT2A
STEP
DIR
MS1
PFD
RC1
nRESET
OUT1B
LOAD_S1
SENSE1
OUT1A
nENABLE
LOGIC_SUPPLY
MS2
C1
680pF
R16
20K
R14
R20
2R
R21
R24
R25
C9
47uF
R26
470R
D2
R15
R17
C2
R18
R19
R22
R23
R40
NC/100K
R42
M1
MOTOR-STEP
SMOTOR
C3
100nF
C4
C5
Drawn by
ZhangYang
Document Number
Sensor-B
Size
A4
Drawn date
2018-06-01
Title
Sensor-B
Rev
v1.4
Checked by
ZhangYang
Date: Monday, June 11, 2018
Sheet 01 of 01