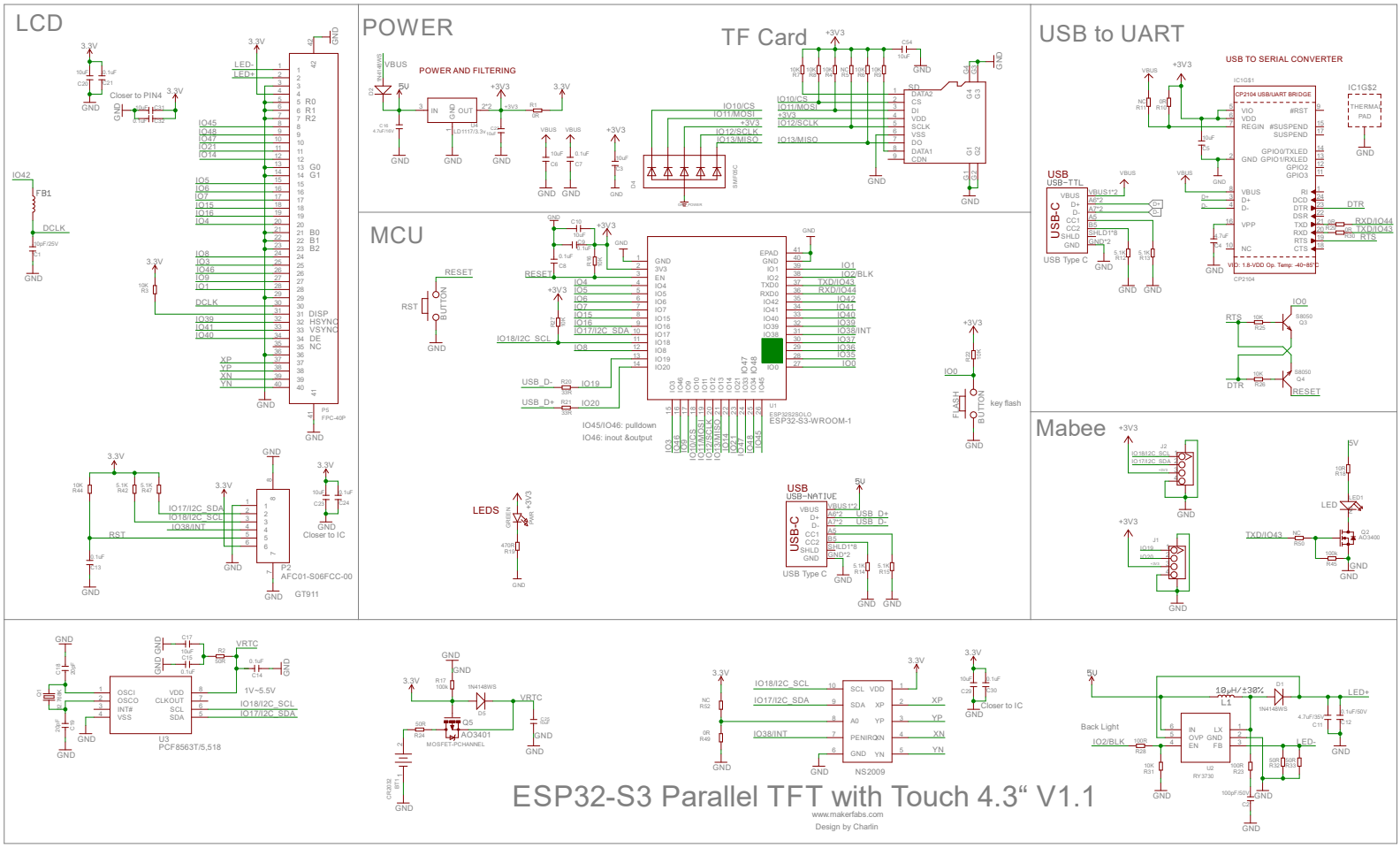
LCD
POWER
POWER AND FILTERING
TF Card
USB to UART
USB TO SERIAL CONVERTER
MCU
Mabee
LEDS
USB
USB-NATIVE
USB Type C
ESP32-S3-WROOM-1
AFC01-S06FCC-00
GT911
PCF8563T/5,518
NS2009
AO3401
MOSFET-PCHANNEL
CP2104 USB/UART BRIDGE
IO45/IO46: pulldown
IO46: inout &output
key flash
Closer to IC
Closer to PIN4
Back Light
ESP32-S3 Parallel TFT with Touch 4.3“ V1.1
www.makerfabs.com
Design by Charlin