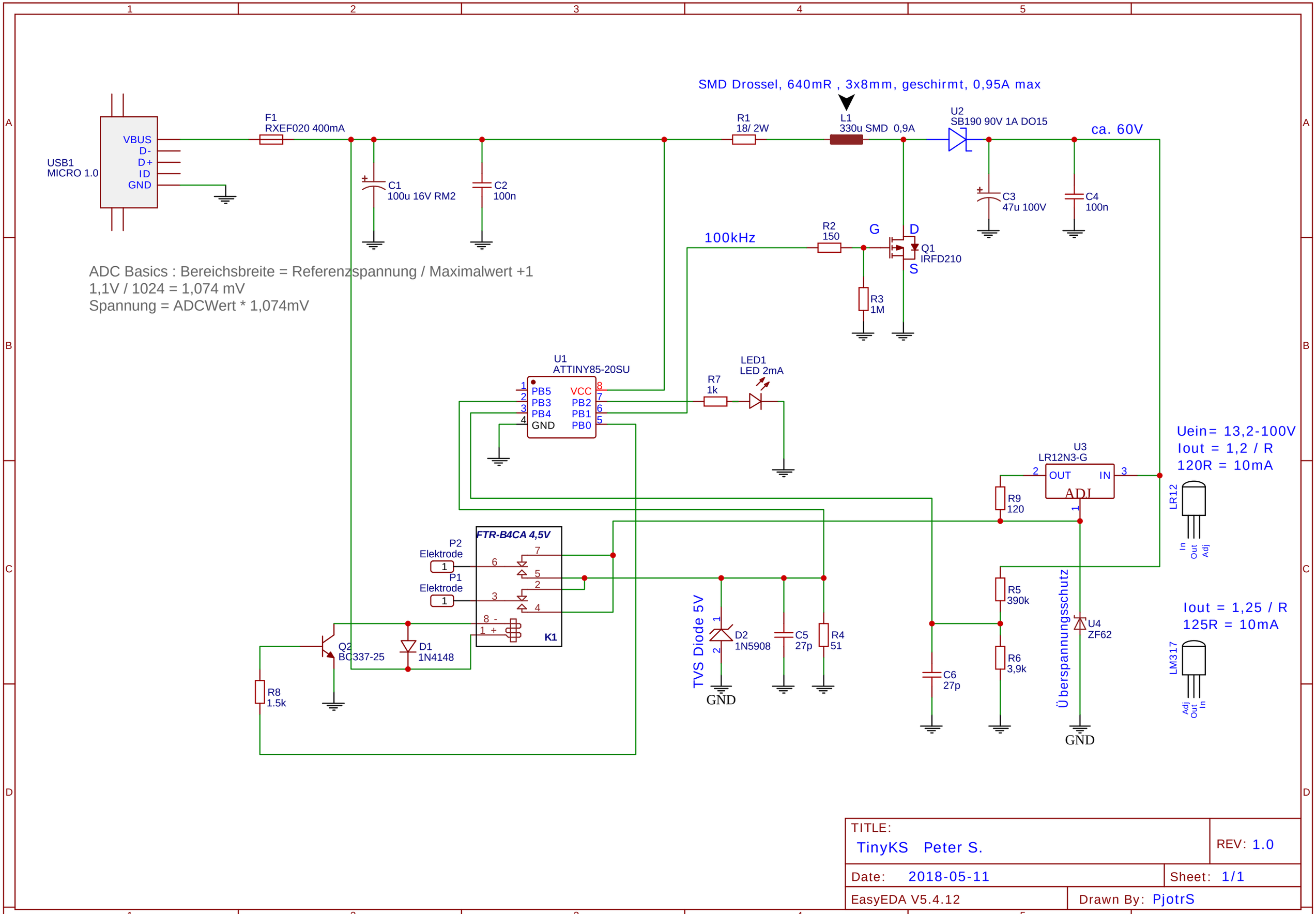
SMD Drossel, 640mR , 3x8mm, geschirmt, 0,95A max
USB1
MICRO 1.0
VBUS
D-
D+
ID
GND
F1
RXEF020 400mA
C1
100u 16V RM2
C2
100n
R1
18/ 2W
L1
330u SMD 0,9A
U2
SB190 90V 1A DO15
ca. 60V
C3
47u 100V
C4
100n
100kHz
R2
150
G
D
S
Q1
IRFD210
R3
1M
ADC Basics : Bereichsbreite = Referenzspannung / Maximalwert +1
1,1V / 1024 = 1,074 mV
Spannung = ADCWert * 1,074mV
U1
ATTINY85-20SU
PB5
PB3
PB4
GND
VCC
PB2
PB1
PB0
R7
1k
LED1
LED 2mA
U3
LR12N3-G
OUT
IN
ADJ
R9
120
LR12
In
Out
Adj
Uein= 13,2-100V
Iout = 1,2 / R
120R = 10mA
FTR-B4CA 4,5V
P2
Elektrode
P1
Elektrode
K1
R5
390k
R6
3,9k
Überspannungsschutz
U4
ZF62
Iout = 1,25 / R
125R = 10mA
LM317
Adj
Out
In
Q2
BC337-25
D1
1N4148
R8
1.5k
TVS Diode 5V
D2
1N5908
C5
27p
R4
51
C6
27p
GND
GND
TITLE:
TinyKS Peter S.
REV: 1.0
Date: 2018-05-11
Sheet: 1/1
EasyEDA V5.4.12
Drawn By: PjotrS