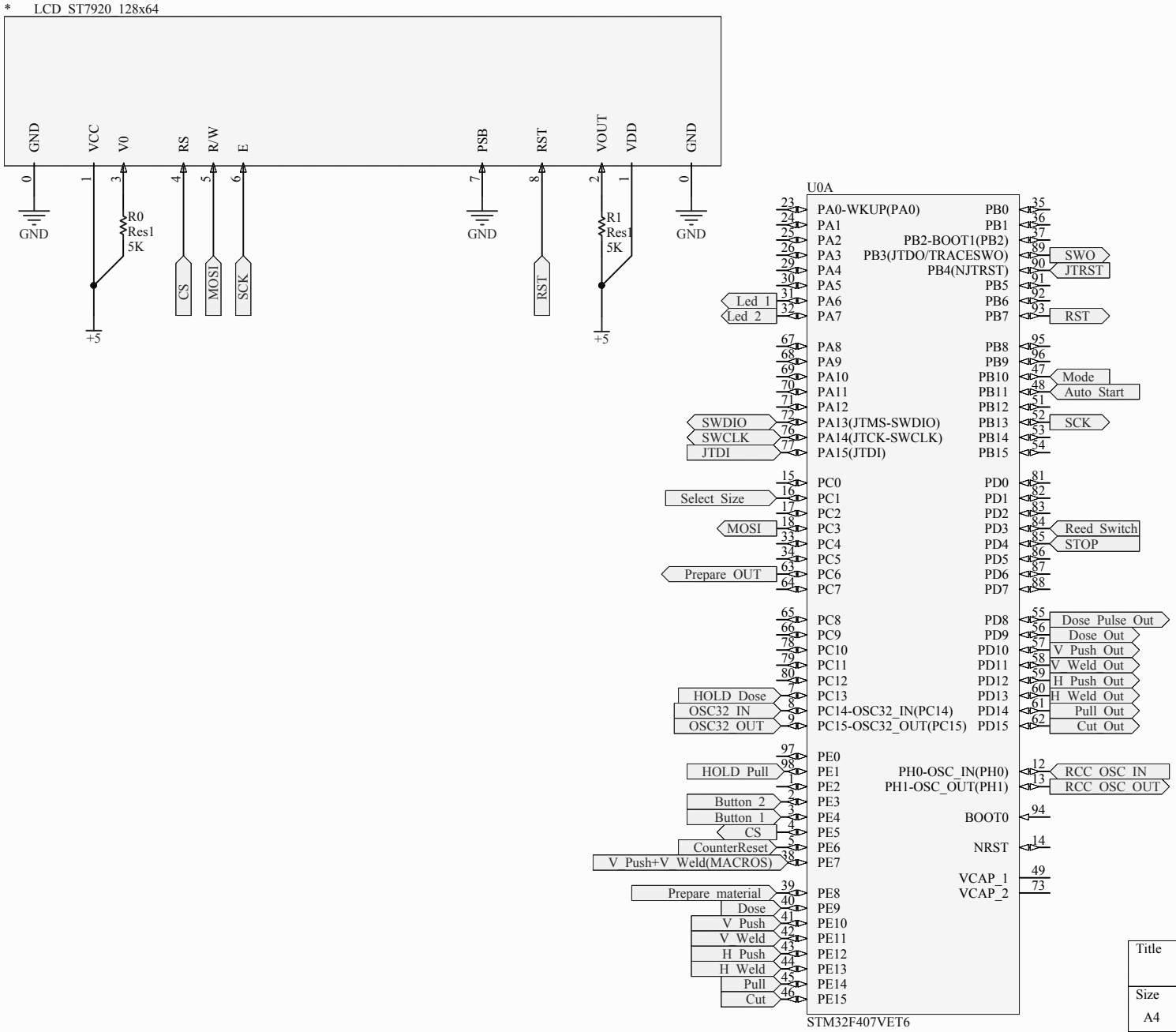


| | | |
|---|---|---|
| Title | | |
| Size A4 | Number | Revision |
| Date: 10.07.2021 | Sheet of | |
| File: S:\STMicroelectronics\..\MainBoard.SchDoc | Drawn By: | |