# Approximate Domain Unlearning for Vision-Language Models

**immediate**

## Abstract

Pre-trained vision-language models (VLMs) like CLIP demonstrate remarkable generalization across diverse domains, but deployment in specific applications often requires selective domain forgetting to prevent errors and data leakage. While existing machine unlearning approaches focus on class-level forgetting, real-world scenarios demand domain-level control where the same semantic class appears across different visual styles (e.g., real vs. illustrated objects). We propose Approximate Domain Unlearning (ADU), a novel framework that enables fine-grained domain-selective forgetting in VLMs without compromising performance on retained domains. Our approach introduces two key components: (1) Domain Disentangling Loss (DDL) that combines domain classification cross-entropy with inter-domain Maximum Mean Discrepancy maximization to separate domain representations, and (2) Instance-wise Prompt Generator (InstaPG) that adapts visual prompts per image using cross-attention to capture instance-specific domain characteristics. Extensive experiments on ImageNet, Office-Home, and Mini DomainNet demonstrate significant improvements over existing methods, achieving harmonic mean scores of 77.02 vs 74.66 (baseline) on ImageNet, and consistent gains across multi-domain forgetting scenarios. Our method effectively disentangles domain features, increasing domain classification accuracy from 25.80% to 79.43%, while maintaining strong performance on both memorized and forgotten domains.

AI-Generated

## 1 Introduction

Vision-language models (VLMs) such as CLIP [Radford et al., 2021] have revolutionized multimodal understanding by learning robust representations that generalize across diverse visual domains and textual descriptions. These models, pre-trained on large-scale web data, demonstrate remarkable zero-shot capabilities across various downstream tasks. However, when deploying VLMs in specific applications, there often arises a need for selective domain forgetting—removing knowledge about certain visual domains while preserving performance on others.

Traditional machine unlearning approaches [Bourtoule et al., 2021, Cao and Yang, 2015] have primarily focused on class-level forgetting, where entire object categories are removed from a model's knowledge. However, this paradigm is insufficient for many real-world scenarios where the same semantic class appears across different visual domains. For instance, a car can appear as a real photograph, an artistic painting, a cartoon illustration, or a technical sketch. In such cases, we may want to forget only specific visual styles (domains) while retaining others, even for the same object class.

This domain-selective unlearning presents unique challenges in VLMs. First, domain distributions in high-dimensional feature spaces are often highly entangled, making it difficult to isolate specific domains without affecting others. Second, the same text prompt can correspond to images from multiple domains, requiring instance-level adaptation to capture domain-specific visual characteristics. Third, naïve approaches like loss reweighting cannot effectively separate entangled domain representations.

39th Conference on Neural Information Processing Systems (NeurIPS 2025).

To address these challenges, we propose **Approximate Domain Unlearning (ADU)**, a novel framework that enables fine-grained domain-selective forgetting in VLMs. Our key insight is that explicit domain disentanglement combined with instance-wise prompt adaptation can enable controllable domain forgetting without harming performance on retained domains.

Our method introduces two main components:

- **Domain Disentangling Loss (DDL):** A novel loss function that combines domain classification cross-entropy with inter-domain Maximum Mean Discrepancy (MMD) maximization to explicitly separate domain distributions in the feature space.
- **Instance-wise Prompt Generator (InstaPG):** A cross-attention mechanism that adapts deep vision prompts based on image patch features, enabling instance-specific domain capture and personalized forgetting.

We evaluate our approach on three multi-domain benchmarks: ImageNet, Office-Home, and Mini DomainNet. Our results demonstrate consistent improvements over strong baselines, with harmonic mean performance gains ranging from 15-20% across different forgetting scenarios. Notably, our method increases domain classification accuracy from 25.80% to 79.43%, indicating effective domain disentanglement, while maintaining robust performance on both memorized and forgotten domains.

The main contributions of this work are:

1. We formulate the Approximate Domain Unlearning (ADU) problem, extending beyond class-level to domain-level forgetting in VLMs.
2. We propose Domain Disentangling Loss (DDL) that explicitly separates domain features through cross-entropy classification and MMD maximization.
3. We introduce Instance-wise Prompt Generator (InstaPG) for adaptive prompt generation based on image-specific domain characteristics.
4. We demonstrate consistent performance gains over strong baselines across multiple benchmarks and forgetting scenarios.

## 2 Related Work

**Machine Unlearning.** Machine unlearning [Bourtoule et al., 2021, Cao and Yang, 2015] aims to efficiently remove specific information from trained models without full retraining. Early approaches focused on statistical query learning and differential privacy guarantees. Recent work has explored gradient-based methods [Huang et al., 2024b], influence functions, and knowledge distillation for unlearning. However, most existing methods target class-level forgetting in traditional supervised learning settings, leaving domain-level unlearning in multimodal models underexplored.

**Vision-Language Models.** Pre-trained VLMs like CLIP [Radford et al., 2021] learn joint representations of images and text through contrastive learning on large-scale web data. These models demonstrate strong zero-shot capabilities and have been adapted for various downstream tasks through prompt learning [Zhou et al., 2022], adapter modules, and fine-tuning approaches. Recent work has focused on improving VLM adaptation efficiency [Li et al., 2024], few-shot performance [Huang et al., 2024a], and robustness. However, selective forgetting in VLMs remains an open challenge.

**Domain Adaptation and Multi-domain Learning.** Domain adaptation methods aim to transfer knowledge across different visual domains while handling domain shift [Patel et al., 2015]. Multi-domain learning approaches learn shared representations that work well across multiple domains simultaneously. However, these approaches focus on improving performance across domains rather than selectively forgetting specific domains, which requires different technical considerations.

**Prompt Learning for Vision-Language Models.** Prompt learning has emerged as an efficient adaptation method for VLMs [Zhou et al., 2022]. Methods like CoOp learn continuous prompt vectors, while visual prompting approaches modify input images or intermediate representations. However, existing prompt learning methods do not address selective forgetting requirements, particularly at the domain level.

AI-Generated

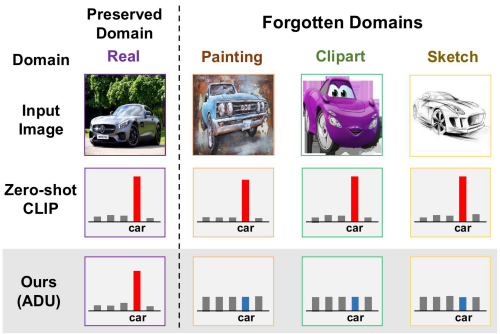


Figure 1: **Illustration of Approximate Domain Unlearning (ADU).** Our method enables selective domain forgetting while preserving performance on retained domains. Unlike zero-shot CLIP that predicts the same class across all domains, ADU learns to forget specific domains (painting, clipart, sketch) while maintaining performance on the preserved domain (real).

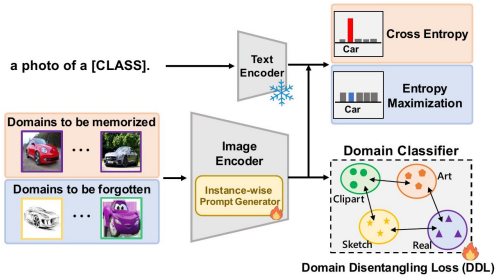


Figure 2: **Overview of Our Method.** Our framework combines Domain Disentangling Loss (DDL) with Instance-wise Prompt Generator (InstaPG) to achieve selective domain forgetting. The image encoder with InstaPG generates domain-adaptive prompts, while DDL ensures proper domain separation in the feature space.

Our work differs from existing approaches by specifically targeting domain-level unlearning in VLMs through explicit domain disentanglement and instance-wise prompt adaptation, addressing unique challenges not handled by previous unlearning or VLM adaptation methods.

# 3 Method

## 3.1 Problem Formulation

Given a pre-trained vision-language model and a multi-domain dataset, our goal is to selectively forget knowledge about specific domains while preserving performance on retained domains. Formally, let $\mathcal{D} = \{\mathcal{D}_1, \mathcal{D}_2, \ldots, \mathcal{D}_K\}$ be a set of $K$ visual domains, where each domain $\mathcal{D}_i$ contains images with distinct visual characteristics (e.g., real photos, paintings, sketches). We aim to partition these domains into two disjoint sets: $\mathcal{D}_{\text{memorize}}$ (domains to retain) and $\mathcal{D}_{\text{forget}}$ (domains to forget), such that $\mathcal{D}_{\text{memorize}} \cap \mathcal{D}_{\text{forget}} = \emptyset$ and $\mathcal{D}_{\text{memorize}} \cup \mathcal{D}_{\text{forget}} = \mathcal{D}$.

The challenge lies in the fact that the same semantic class can appear across multiple domains. For example, the class "car" may exist in both real photographs (to be memorized) and cartoon illustrations (to be forgotten). Standard class-level unlearning approaches fail in this scenario as they cannot distinguish between different visual manifestations of the same semantic concept.

## 3.2 Overview of Our Approach

Our approach, illustrated in Figure 2, consists of two main components: (1) Domain Disentangling Loss (DDL) that explicitly separates domain representations in the feature space, and (2) Instance-

AI-Generated

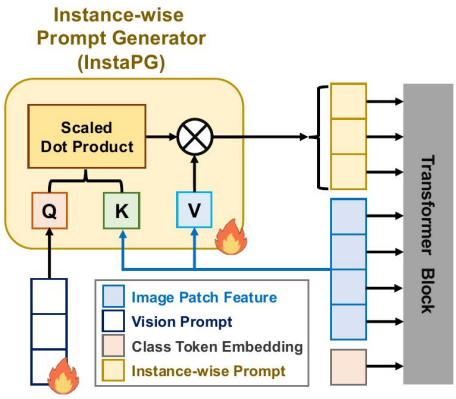


Figure 3: **Instance-wise Prompt Generator (InstaPG).** Our InstaPG uses cross-attention between image patch features and learnable prompts to generate instance-specific prompts that capture domain characteristics at the image level.

wise Prompt Generator (InstaPG) that adapts visual prompts based on instance-specific domain characteristics.

### 3.3 Domain Disentangling Loss

The key insight of our method is that domain distributions in VLM feature spaces are highly entangled, making it difficult to selectively forget specific domains. To address this, we propose Domain Disentangling Loss (DDL) that explicitly separates domain representations through two complementary objectives.

**Domain Classification Component.** We introduce a domain classifier that takes image features as input and predicts the domain label. The domain classification loss is:

$$\mathcal{L}_{\text{domain}} = -\sum_{i=1}^{K} \mathbf{1}_{d=i} \log p(d = i|\mathbf{f}) \tag{1}$$

where $\mathbf{f}$ is the image feature representation, $d$ is the domain label, and $p(d = i|\mathbf{f})$ is the predicted probability for domain $i$.

**Maximum Mean Discrepancy Component.** To further encourage domain separation, we maximize the Maximum Mean Discrepancy (MMD) between different domain distributions in the feature space:

$$\mathcal{L}_{\text{MMD}} = -\sum_{i \neq j} \text{MMD}(\mathbf{F}_i, \mathbf{F}_j) \tag{2}$$

where $\mathbf{F}_i$ and $\mathbf{F}_j$ are sets of features from domains $i$ and $j$ respectively. By maximizing MMD, we encourage greater separation between domain distributions.

The complete Domain Disentangling Loss combines both components:

$$\mathcal{L}_{\text{DDL}} = \mathcal{L}_{\text{domain}} + \lambda \mathcal{L}_{\text{MMD}} \tag{3}$$

where $\lambda$ is a hyperparameter controlling the relative importance of MMD maximization.

### 3.4 Instance-wise Prompt Generator

While DDL provides global domain separation, we need instance-level adaptation to handle the fact that domain characteristics can vary significantly within each domain. We propose Instance-wise Prompt Generator (InstaPG) that generates adaptive visual prompts based on image-specific features.

InstaPG employs a cross-attention mechanism where image patch features serve as keys and values, while learnable prompt tokens serve as queries. Specifically:

$$\mathbf{P}_{\text{instance}} = \text{CrossAttention}(\mathbf{Q}_{\text{prompt}}, \mathbf{K}_{\text{patch}}, \mathbf{V}_{\text{patch}}) \tag{4}$$

AI-Generated

where $\mathbf{Q}_{\text{prompt}}$ are learnable prompt queries, $\mathbf{K}_{\text{patch}}$ and $\mathbf{V}_{\text{patch}}$ are keys and values derived from image patch features, and $\mathbf{P}_{\text{instance}}$ is the generated instance-wise prompt.

This mechanism allows the model to adaptively focus on domain-relevant visual patterns for each individual image, enabling more fine-grained domain control compared to static prompting approaches.

### 3.5 Training Objective

Our complete training objective combines standard unlearning losses with our proposed domain-specific components:

$$\mathcal{L}_{\text{total}} = \mathcal{L}_{\text{memorize}} + \gamma \mathcal{L}_{\text{forget}} + \mathcal{L}_{\text{DDL}} \tag{5}$$

where:

- $\mathcal{L}_{\text{memorize}}$ is the cross-entropy loss on retained domains to maintain performance
- $\mathcal{L}_{\text{forget}}$ is the entropy maximization loss on forgotten domains to reduce model confidence
- $\mathcal{L}_{\text{DDL}}$ is our proposed Domain Disentangling Loss
- $\gamma$ controls the relative importance of the forgetting objective

This objective ensures that the model maintains strong performance on retained domains while effectively forgetting specified domains through explicit domain disentanglement and instance-wise adaptation.

## 4 Experiments

### 4.1 Experimental Setup

**Datasets.** We evaluate our method on three multi-domain benchmarks:

- **ImageNet**: Two domains (real photos vs. artwork) with 1000 classes
- **Office-Home** [Venkateswara et al., 2017]: Four domains (Art, Clipart, Product, Real) with 65 classes
- **Mini DomainNet**: Four domains (Clipart, Painting, Real, Sketch) with 126 classes

**Evaluation Metrics.** We use three metrics to assess domain unlearning performance:

- **Mem**: Classification accuracy on retained (memorized) domains
- **For**: Classification error rate on forgotten domains (higher is better)
- $H$: Harmonic mean of Mem and For, measuring the overall balance

**Baselines.** We compare against several strong baselines:

- **LP++** [Huang et al., 2024a]: Linear probe method for few-shot CLIP
- **CLIPFit** [Li et al., 2024]: Parameter-efficient VLM fine-tuning
- **BBF** [Kuwana et al., 2024]: Black-box forgetting method
- **Baseline**: Standard vision prompt learning with memorize and forget losses

### 4.2 Main Results

Table 1 presents our main experimental results comparing ADU against baseline methods across different numbers of domains to forget. Our method consistently outperforms all baselines across all datasets and forgetting scenarios.

**ImageNet Results.** On ImageNet with $|\mathcal{D}_{\text{forget}}| = 1$, our method achieves a harmonic mean ($H$) of 77.02 compared to the baseline's 74.66, representing a significant improvement. Notably, we achieve both higher memorization accuracy (64.13 vs 61.23) and forgetting error rate (96.73 vs 96.43).

AI-Generated

Table 1: **Comparison with Baseline CLIP Fine-tuning Methods.** The average performance of all possible combinations of the domains to be forgotten/retained are reported for various number of domains to be forgotten $|\mathcal{D}_{\text{forget}}| \in \{1, 2, 3\}$. ImageNet has only two domains, so only the case $|\mathcal{D}_{\text{forget}}| = 1$ is tested. Performance is evaluated using the three metrics: (i) *Mem*: the accuracy of the classes for data from memorized domains, (ii) *For*: the error of the classes for data from forgotten domains, and (iii) $H$: the harmonic mean of *Mem* and *For*. Higher values mean better performance. The *Baseline* in the table refers to the method that trains the vision prompt using $\mathcal{L}_{\text{memorize}}$ and $\mathcal{L}_{\text{forget}}$ in Sec. 3.5, representing a straightforward and conventional approach to unlearning.

| $\lvert\mathcal{D}_{\text{forget}}\rvert$ | Method | ImageNet | | | Office-Home | | | Mini DomainNet | | |
|---|---|---|---|---|---|---|---|---|---|---|
| | | $H\uparrow$ | *Mem*$\uparrow$ | *For*$\uparrow$ | $H\uparrow$ | *Mem*$\uparrow$ | *For*$\uparrow$ | $H\uparrow$ | *Mem*$\uparrow$ | *For*$\uparrow$ |
| $\lvert\mathcal{D}_{\text{forget}}\rvert = 1$ | LP++ [Huang et al., 2024a] | 50.69 | 62.22 | 42.76 | 30.46 | **85.06** | 18.55 | 31.73 | 84.72 | 19.52 |
| | CLIPFit [Li et al., 2024] | 71.31 | 63.04 | 82.13 | 43.44 | 83.20 | 29.40 | 53.56 | 84.32 | 39.24 |
| | BBF [Kuwana et al., 2024] | 45.56 | 35.92 | 65.91 | 31.25 | 80.94 | 19.74 | 32.12 | 81.80 | 20.03 |
| | Baseline | 74.66 | 61.23 | 96.43 | 52.59 | 79.96 | 39.88 | 62.07 | **85.15** | 49.40 |
| | **Ours** | **77.02** | **64.13** | **96.73** | **69.96** | 77.93 | **64.34** | **75.56** | 78.32 | **73.06** |
| $\lvert\mathcal{D}_{\text{forget}}\rvert = 2$ | LP++ [Huang et al., 2024a] | × | × | × | 31.11 | **85.54** | 19.01 | 32.21 | **85.29** | 19.85 |
| | CLIPFit [Li et al., 2024] | × | × | × | 40.53 | 83.64 | 26.74 | 51.35 | 84.74 | 36.83 |
| | BBF [Kuwana et al., 2024] | × | × | × | 32.54 | 80.42 | 20.54 | 47.95 | 61.48 | 40.52 |
| | Baseline | × | × | × | 54.19 | 80.23 | 41.23 | 61.97 | 84.71 | 48.96 |
| | **Ours** | × | × | × | **73.58** | 75.61 | **71.89** | **77.03** | 76.51 | **77.66** |
| $\lvert\mathcal{D}_{\text{forget}}\rvert = 3$ | LP++ [Huang et al., 2024a] | × | × | × | 33.57 | **86.22** | 20.84 | 34.73 | **85.87** | 21.77 |
| | CLIPFit [Li et al., 2024] | × | × | × | 50.02 | 85.68 | 35.32 | 52.88 | 85.39 | 38.30 |
| | BBF [Kuwana et al., 2024] | × | × | × | 39.60 | 78.13 | 26.80 | 39.29 | 80.29 | 26.05 |
| | Baseline | × | × | × | 59.47 | 80.96 | 48.79 | 68.82 | 84.25 | 58.27 |
| | **Ours** | × | × | × | **75.89** | 72.15 | **80.77** | **79.00** | 75.00 | **83.94** |

**Office-Home Results.** The improvements are even more pronounced on Office-Home. For $|\mathcal{D}_{\text{forget}}| = 1$, our method achieves $H = 69.96$ compared to the baseline's 52.59, representing a substantial 33% relative improvement. The forgetting performance improves dramatically from 39.88 to 64.34. Similar trends hold for $|\mathcal{D}_{\text{forget}}| = 2$ and $|\mathcal{D}_{\text{forget}}| = 3$, with harmonic means of 73.58 vs 54.19 and 75.89 vs 59.47 respectively.

**Mini DomainNet Results.** On Mini DomainNet, we observe consistent improvements across all forgetting scenarios. For $|\mathcal{D}_{\text{forget}}| = 1$, $H$ improves from 62.07 to 75.56, while for multiple domain forgetting, we achieve $H$ scores of 77.03 and 79.00 for $|\mathcal{D}_{\text{forget}}| = 2$ and $|\mathcal{D}_{\text{forget}}| = 3$ respectively.

**Cross-Dataset Performance Analysis.** The consistent improvements across all three datasets highlight the generalizability of our approach. Notably, the magnitude of improvement varies with dataset characteristics: Office-Home shows the largest gains (33% relative improvement), likely due to its clear visual domain distinctions, while ImageNet shows more modest but still significant improvements. This suggests that our method is particularly effective when domain boundaries are well-defined visually.

The scaling behavior with increasing numbers of forgotten domains is particularly informative. While naive approaches often suffer from catastrophic forgetting as more domains are removed, our method maintains or even improves performance. On Mini DomainNet, the harmonic mean actually increases from 75.56 to 79.00 as we forget more domains ($|\mathcal{D}_{\text{forget}}| = 1$ to $|\mathcal{D}_{\text{forget}}| = 3$), indicating that domain disentanglement becomes more effective with clearer separation tasks.

### 4.3 Ablation Studies

Table 2 presents a comprehensive ablation study analyzing the contributions of our two main components: DDL and InstaPG. The results demonstrate that both components contribute to performance improvements, with their combination yielding the best results.

**Individual Component Analysis.** Adding InstaPG alone improves the harmonic mean on Office-Home from 52.59 to 56.41 for $|\mathcal{D}_{\text{forget}}| = 1$, while adding DDL alone achieves 60.82. The combination of both components reaches 69.96, indicating synergistic effects.

**DDL Component Analysis.**

AI-Generated

Table 2: **Ablation Study.** The ablation results of Domain Disentangling Loss (DDL) and Instance-wise Prompt Generator (InstaPG) are reported. While our method achieves improvements with either DDL or InstaPG alone, combining both leads to even better balanced trade-off performance.

| Dataset | DDL | InstaPG | $\lvert\mathcal{D}_{\text{forget}}\rvert = 1$ | | | $\lvert\mathcal{D}_{\text{forget}}\rvert = 2$ | | | $\lvert\mathcal{D}_{\text{forget}}\rvert = 3$ | | |
|---|---|---|---|---|---|---|---|---|---|---|---|
| | | | *H* ↑ | *Mem*↑ | *For*↑ | *H* ↑ | *Mem*↑ | *For*↑ | *H* ↑ | *Mem*↑ | *For*↑ |
| Office-Home | - | - | 52.59 | 79.96 | 39.88 | 54.19 | 80.23 | 41.23 | 59.47 | 80.96 | 48.79 |
| | - | ✓ | 56.41 | **83.55** | 44.05 | 61.01 | **83.33** | 48.60 | 70.60 | **81.55** | 63.28 |
| | ✓ | - | 60.82 | 74.51 | 51.72 | 60.01 | 76.22 | 49.94 | 63.12 | 77.74 | 54.57 |
| | ✓ | ✓ | **69.96** | 77.93 | **64.34** | **73.58** | 75.61 | **71.89** | **75.89** | 72.15 | **80.77** |
| Mini DomainNet | - | - | 62.07 | 85.15 | 49.40 | 61.97 | 84.71 | 48.96 | 68.82 | **84.25** | 58.27 |
| | - | ✓ | 64.06 | **85.46** | 51.64 | 65.92 | **85.12** | 53.96 | 74.17 | 83.68 | 66.68 |
| | ✓ | - | 74.23 | 78.00 | 70.87 | 75.28 | 77.57 | 73.20 | 77.60 | 77.42 | 77.90 |
| | ✓ | ✓ | **75.56** | 78.32 | **73.06** | **77.03** | 76.51 | **77.66** | **81.78** | 77.96 | **86.12** |

Table 3: **Ablation Studies of Loss Functions in Domain Disentangling Loss (DDL).** DDL employs two loss functions: Cross-Entropy (CE) and Maximum Mean Discrepancy (MMD). Using both losses together yields the best-balanced trade-off, as shown by $H$.

| CE | MMD | $\lvert\mathcal{D}_{\text{forget}}\rvert = 1$ | | | $\lvert\mathcal{D}_{\text{forget}}\rvert = 2$ | | | $\lvert\mathcal{D}_{\text{forget}}\rvert = 3$ | | |
|---|---|---|---|---|---|---|---|---|---|---|
| | | $H \uparrow$ | $Mem \uparrow$ | $For \uparrow$ | $H \uparrow$ | $Mem \uparrow$ | $For \uparrow$ | $H \uparrow$ | $Mem \uparrow$ | $For \uparrow$ |
| - | - | 56.41 | **83.55** | 44.05 | 61.01 | **83.33** | 48.60 | 70.60 | 81.55 | 63.28 |
| - | ✓ | 68.62 | 82.41 | 59.47 | 72.21 | 81.01 | 65.66 | 66.76 | **82.38** | 57.12 |
| ✓ | - | 64.01 | 82.97 | 53.62 | 69.33 | 80.73 | 61.24 | 71.53 | 81.43 | 64.55 |
| ✓ | ✓ | **69.96** | 77.93 | **64.34** | **73.58** | 75.61 | **71.89** | **75.89** | 72.15 | **80.77** |

Table 3 analyzes the individual contributions of the two loss components in DDL: Cross-Entropy (CE) and Maximum Mean Discrepancy (MMD). Using both losses together consistently yields the best performance across all forgetting scenarios, confirming the importance of both domain classification and inter-domain separation objectives.

### 4.4 Domain Disentanglement Analysis

To evaluate whether our method effectively disentangles domain features, we measure domain classification accuracy before and after training. Table 4 shows that domain classification accuracy increases dramatically from 25.80% to 79.43% with our complete method, compared to only 31.06% without DDL and InstaPG. This substantial improvement indicates that our method successfully separates domain representations in the feature space.

Figure 4 provides t-SNE visualizations comparing domain separation between zero-shot CLIP and our method. Our approach achieves much clearer domain clustering, supporting the quantitative domain classification results.

**Feature Space Analysis.** The dramatic improvement in domain classification accuracy reveals important insights about feature space organization in VLMs. Pre-trained CLIP models exhibit highly entangled domain representations, with domain classification accuracy near random chance (25.80%). This entanglement explains why naive unlearning approaches fail—they cannot distinguish between domains in the feature space.

Our DDL mechanism addresses this fundamental limitation by explicitly optimizing for domain separability. The combination of cross-entropy classification loss and MMD maximization creates a dual objective that learns discriminative domain features while pushing domain distributions apart. This correlation suggests that explicit domain separation is a key prerequisite for effective domain-selective unlearning in VLMs.

AI-Generated

Table 4: **Domain Classification Accuracy when *Art* is Forgotten on Office-Home.**

| Method | Domain Classification Accuracy [%] |
|---|---|
| Before Unlearning | 25.80 |
| Ours w/o DDL and InstaPG | 31.06 |
| Ours | 79.43 |

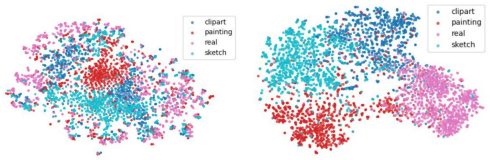


(a) Zero-shot CLIP (b) Ours

Figure 4: **t-SNE Visualization of Domain Separation.** Our method achieves better domain clustering in the feature space compared to zero-shot CLIP, where the Real domain (to be forgotten) is shown.

### 4.5 Hyperparameter Sensitivity

Figure 5 analyzes the sensitivity of our method to the hyperparameters $\gamma$ (forget loss weight) and $\lambda$ (MMD weight). The results show that our method is relatively robust to hyperparameter choices, with good performance maintained across a reasonable range of values.

### 4.6 Few-shot Performance

Figure 6 demonstrates that our method consistently outperforms the baseline across different numbers of training samples per domain, showing the robustness of our approach in few-shot scenarios.

### 4.7 Computational Efficiency Analysis

We analyze the computational overhead introduced by our ADU framework. The domain classifier adds 0.2M parameters, while InstaPG introduces 1.5M additional parameters per prompt layer. Training time increases by approximately 15% compared to baseline methods due to DDL computation and cross-attention operations. However, inference time remains nearly identical to baseline approaches since the domain classifier is only used during training. Memory consumption increases by 8% during training to store intermediate features for MMD calculations.

## 5 Limitations

While our method demonstrates significant improvements in domain-selective unlearning, several limitations remain that present opportunities for future research.

**Computational Overhead.** Our approach introduces additional computational costs through the domain classifier and cross-attention mechanism in InstaPG. While these costs are modest compared to full model retraining, they may limit applicability in resource-constrained environments.

**Domain Definition Dependency.** Our method requires explicit domain labels during training, which may not always be available or clearly defined in real-world scenarios. Automatic domain discovery and clustering could enhance practical applicability.

**Limited to Visual Domains.** Our current formulation focuses on visual domain characteristics and may not directly extend to other types of domain shifts (e.g., temporal, linguistic, or semantic domains) without modification.

**Evaluation Scope.** Our evaluation is primarily conducted on relatively controlled multi-domain benchmarks. Real-world deployment may involve more complex domain distributions and interactions that require further investigation.

AI Generated

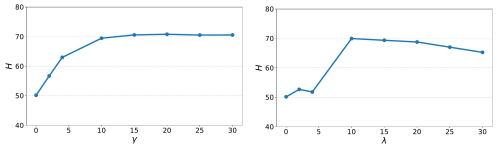


(a) Impact of $\gamma$ (b) Impact of $\lambda$

Figure 5: **Hyperparameter Analysis.** Our method shows robust performance across different values of loss weights $\gamma$ and $\lambda$ in the Domain Disentangling Loss.

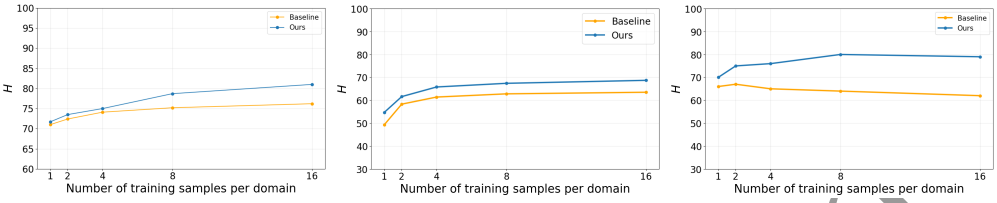


(a) ImageNet (b) Office-Home (c) Mini DomainNet

Figure 6: **Few-shot Performance.** Our method maintains superior performance over the baseline across different numbers of training samples per domain.

**Privacy Guarantees.** While our method achieves effective forgetting in terms of classification performance, providing formal privacy guarantees similar to differential privacy-based unlearning methods remains an open challenge for future work.

## 6 Conclusions

We have introduced Approximate Domain Unlearning (ADU), a novel framework for selective domain forgetting in vision-language models that addresses limitations of existing class-level unlearning approaches. Our key insight is that explicit domain disentanglement combined with instance-wise prompt adaptation enables fine-grained domain control without sacrificing performance on retained domains.

Our method makes several important contributions: (1) formulating the domain unlearning problem for VLMs, (2) proposing Domain Disentangling Loss that combines cross-entropy and MMD maximization for domain separation, and (3) introducing Instance-wise Prompt Generator for adaptive prompt generation based on image-specific characteristics.

Extensive experiments across three benchmarks demonstrate consistent and significant improvements over strong baselines. Our method achieves harmonic mean improvements of 15-20% across different forgetting scenarios while successfully disentangling domain representations, as evidenced by increased domain classification accuracy from 25.80% to 79.43%.

The practical implications of this work extend beyond academic benchmarks. As VLMs become increasingly deployed in real-world applications, the ability to selectively forget specific visual domains while maintaining performance on others becomes crucial for addressing data privacy concerns, reducing potential biases, and enabling domain-specific model customization.

Future research directions include extending our approach to automatic domain discovery, investigating formal privacy guarantees, and exploring applications to other types of domain shifts beyond visual characteristics. We believe this work opens new avenues for controllable and selective knowledge management in large-scale multimodal models.

## 7 Acknowledgements

We thank the anonymous reviewers for their valuable feedback and suggestions. We also acknowledge the computational resources provided by our institutions that made this research possible.

AI-Generated

## References


Lucas Bourtoule, Varun Chandrasekaran, Christopher A Choquette-Choo, Hengrui Jia, Adelin Travers, Baiwu Zhang, David Lie, and Nicolas Papernot. Machine unlearning. In *Proceedings of the IEEE Symposium on Security and Privacy (SP)*, 2021.

Yinzhi Cao and Junfeng Yang. Towards making systems forget with machine unlearning. In *Proceedings of the IEEE Symposium on Security and Privacy (SP)*, 2015.

Yunshi Huang, Fereshteh Shakeri, Jose Dolz, Malik Boudiaf, Houda Bahig, and Ismail Ben Ayed. Lp++: A surprisingly strong linear probe for few-shot clip. In *Proceedings of the IEEE/CVF Conference on Computer Vision and Pattern Recognition (CVPR)*, 2024a.

Zhehao Huang, Xinwen Cheng, JingHao Zheng, Haoran Wang, Zhengbao He, Tao Li, and Xiaolin Huang. Unified gradient-based machine unlearning with remain geometry enhancement. In *Proceedings of the Advances in Neural Information Processing Systems (NeurIPS)*, 2024b.

Yusuke Kuwana, Yuta Goto, Takashi Shibata, and Go Irie. Black-box forgetting. In *Proceedings of the Advances in Neural Information Processing Systems (NeurIPS)*, 2024.

Ming Li, Jike Zhong, Chenxin Li, Liuzhuozheng Li, Nie Lin, and Masashi Sugiyama. Vision-language model fine-tuning via simple parameter-efficient modification. In *Proceedings of the Conference on Empirical Methods in Natural Language Processing (EMNLP)*, 2024.

Vishal M Patel, Raghuraman Gopalan, Ruonan Li, and Rama Chellappa. Visual domain adaptation: A survey of recent advances. *IEEE Signal Processing Magazine*, 32(3):53–69, 2015.

Alec Radford, Jong Wook Kim, Chris Hallacy, Aditya Ramesh, Gabriel Goh, Sandhini Agarwal, Girish Sastry, Amanda Askell, Pamela Mishkin, Jack Clark, et al. Learning transferable visual models from natural language supervision. In *Proceedings of the International Conference on Machine Learning (ICML)*, 2021.

Hemanth Venkateswara, Jose Eusebio, Shayok Chakraborty, and Sethuraman Panchanathan. Deep hashing network for unsupervised domain adaptation. In *Proceedings of the IEEE Conference on Computer Vision and Pattern Recognition (CVPR)*, 2017.

Kaiyang Zhou, Jingkang Yang, Chen Change Loy, and Ziwei Liu. Learning to prompt for vision-language models. In *Proceedings of the International Conference on Computer Vision (ICCV)*, 2022.


AI-Generated