Prompt-guided Disentangled Representation for Action Recognition

Anonymous Author

Abstract

Recognizing actions in videos containing multiple, overlapping activities is a long-standing challenge, as unified feature extraction tends to entangle object interactions across distinct actions, reducing both accuracy and interpretability. We present **ProDA**, a **Pro**mpt-guided **D**isentangled representation framework for **A**ction recognition that addresses this challenge by conditioning feature disentanglement on user-specified action prompts. Given a video represented as a Spatio-temporal Scene Graph (SSG), ProDA employs a Dynamic Prompt Module (DPM) to generate action-aware prompts from multi-hot action specifications and uses these prompts to guide a Video Graph Parsing Neural Network (VGPNN) that separates the scene graph into a Specified Action Part (SAP) and a complementary Unspecified Action Part (UAP). A tailored Video Graph Normalization (VGNorm) enforces temporal consistency across graph nodes, and an Action Disentanglement Loss (AD Loss) jointly minimizes inter-part correlation and enforces margin-based reconstruction to ensure the two representations are complementary yet jointly complete. On the Charades benchmark, ProDA achieves 71.1 mAP (RGB+SSG, CLIP-B/16), surpassing previous state-of-the-art methods by a significant margin. On SportsHHI, ProDA yields consistent gains of +2.86 mAP and improvements across all recall metrics. Remarkably, ProDA also exhibits emergent temporal localization ability without any explicit localization supervision, predicting frame-level attention scores that align with action-relevant frames.

AI-Generated

1 Introduction

Video action recognition is a fundamental problem in computer vision with applications spanning surveillance, sports analysis, healthcare monitoring, and human-computer interaction. While significant progress has been made in recognizing atomic or short-duration actions in controlled settings [5, 10, 8, 1], real-world videos frequently contain multiple concurrent and overlapping activities. In such scenarios, standard video encoders produce entangled holistic representations that conflate signals from different actions, making it difficult to isolate which visual evidence supports which action label.

A promising line of work uses Spatio-temporal Scene Graphs (SSGs) [13] to represent videos as structured graphs of objects and their pairwise relationships over time. By grounding action recognition in discrete object-relation reasoning, SSG-based methods [22, 31, 32] offer improved interpretability over pure appearance-based models. However, existing approaches typically process all actions simultaneously using a single unified graph representation, making it difficult to disentangle action-specific evidence from background information. Even when attention mechanisms or graph convolutions are applied, the resulting features may still encode mixed signals from multiple co-occurring activities.

We identify two key limitations of current approaches:

39th Conference on Neural Information Processing Systems (NeurIPS 2025).

1. **Entangled representations**: Features extracted from a video containing multiple actions simultaneously encode all actions, making it hard for the classifier to focus on the evidence most relevant to a specific action query.
2. **Lack of action-specificity**: Most graph-based methods do not leverage user-specified action information to guide the feature extraction process, missing an opportunity to focus the model on action-relevant subgraphs.

To address these limitations, we propose **ProDA** (**Pro**mpt-guided **D**isentangled representation for **A**ction recognition), a framework that decomposes the scene graph representation into two complementary subgraphs: a *Specified Action Part* (SAP) and an *Unspecified Action Part* (UAP), conditioned on a user-provided action prompt. The SAP captures features relevant to the queried action(s), while the UAP encodes the remaining contextual information. This prompt-guided disentanglement enables the model to produce focused, action-specific representations for recognition.

The core of ProDA consists of three novel components:

- **Dynamic Prompt Module (DPM)**: Generates action-aware prompts from multi-hot action label specifications, producing context vectors that dynamically adapt to the specific actions of interest at inference time.
- **Video Graph Parsing Neural Network (VGPNN)**: A graph neural network that uses the DPM-generated prompts to parse and update node representations via link–message–update operations with temporal self-attention over graph edges.
- **Video Graph Normalization (VGNorm)**: A novel normalization scheme that simultaneously enforces temporal consistency within a node's trajectory and graph-level heterogeneity across different node types.

These components are trained with an **Action Disentanglement Loss (AD Loss)** that combines correlation minimization with margin-based reconstruction to ensure the SAP and UAP are complementary yet jointly reconstruct the original representation.

Our key contributions are:

- A prompt-guided, action-conditioned disentanglement framework that splits spatio-temporal scene graphs into specified (SAP) and complementary (UAP) action subgraphs.
- A Video Graph Parsing Neural Network (VGPNN) with temporal self-attention and a novel Video Graph Normalization (VGNorm) scheme for spatio-temporal consistency.
- An Action Disentanglement Loss that jointly enforces low inter-part correlation and margin-based reconstruction for completeness.
- State-of-the-art results on Charades (71.1 mAP) and strong gains on SportsHHI, along with emergent temporal localization capability without extra supervision.

AI-Generated

2 Related Work

2.1 Video Action Recognition

Early approaches to video action recognition relied on two-stream networks [27] and 3D convolutional networks [5, 29] that process spatial and temporal information jointly. The advent of attention mechanisms [30] led to transformer-based video models such as ViViT [1], TimeSformer [3], and VideoMAE [28], which achieve strong performance on standard benchmarks. Dual-pathway networks such as SlowFast [10] further improved recognition by capturing motion at multiple temporal resolutions. Vision-language pretraining through CLIP [25] has also shown considerable promise, with methods like VicTR [15] achieving strong results on multi-label action recognition by leveraging language supervision. Despite this progress, these methods produce holistic feature representations that do not explicitly separate evidence for different co-occurring actions.

2.2 Scene Graph-based Action Recognition

Spatio-temporal scene graphs provide a structured representation of videos as graphs of objects and their relationships over time. Action Genome [13] introduced the concept of decomposing actions into

spatio-temporal scene graphs and demonstrated their utility for action recognition on the Charades dataset. Subsequent work explored graph convolutional networks on these representations [32, 22, 31]. OR2G [22] introduced a dual-level graph combining object-level and relation-level graphs with multi-head edge-to-node message passing. LaIAR [31] leveraged language model guidance to improve both recognition and interpretability. STTran [6] proposed a spatial-temporal transformer for dynamic scene graph generation. The Graph Parsing Neural Network (GPNN) [24] introduced a differentiable framework for inferring parse graphs from scenes. However, all these methods process the full scene graph jointly without decomposing it into action-specific components.

2.3 Disentangled Representation Learning

Disentangled representation learning aims to separate different generative factors of variation in the data [19, 33]. Early work explored unsupervised disentanglement from video by separating static content from dynamic motion [7, 37]. More recent methods have investigated disentanglement for specific visual tasks, including graph-structured data [17], scene text recognition [35], and human-object interaction detection [18]. In the context of action recognition, disentangled representations have been explored for separating actor-specific from scene-specific features [16, 21]. ProDA contributes to this line of work by introducing prompt-guided disentanglement conditioned on user-specified action queries applied to scene graph representations.

2.4 Prompt Learning

Prompt learning was pioneered in natural language processing as a way to efficiently adapt large pre-trained models to downstream tasks. Visual prompt tuning (VPT) [14] demonstrated that prepending learnable token embeddings to the input of vision transformers can match the performance of full fine-tuning with far fewer parameters. CoCoOp [36] introduced conditional context optimization for vision-language models, generating instance-conditioned prompts to improve generalization. In graph neural networks, GPF [9] proposed universal prompt features that can adapt any pretrained GNN to downstream tasks. Our DPM draws inspiration from these works but is specifically designed to generate *action-aware* graph prompts that condition the VGPNN on multi-hot action specifications, enabling dynamic adaptation to different action queries at inference time.

3 Methodology

3.1 Overview

Given a video V with a set of ground-truth action labels $\mathcal{A} = \{a_1, a_2, \ldots, a_K\}$ from a vocabulary of C action classes, ProDA aims to learn disentangled representations for each queried action subset. The framework operates in three stages: (1) constructing a Spatio-temporal Scene Graph (SSG) from the video and encoding it with a pretrained video encoder; (2) generating action-aware prompts via the Dynamic Prompt Module (DPM); and (3) using these prompts to guide the Video Graph Parsing Neural Network (VGPNN) to produce disentangled SAP and UAP features. Figure 1 provides an overview of the full pipeline.

3.2 Spatio-temporal Scene Graph Construction and Encoding

Following Action Genome [13], we represent each video V as a Spatio-temporal Scene Graph $G = (\mathcal{V}, \mathcal{E})$, where nodes $\mathcal{V}$ represent detected objects across frames and edges $\mathcal{E}$ encode spatial and temporal relationships between them. Each node is associated with a feature vector extracted by a CLIP [25] visual encoder, providing rich semantic representations grounded in natural language.

Formally, let $\mathbf{X} \in \mathbb{R}^{N \times d}$ denote the initial node feature matrix, where N is the number of nodes and d is the feature dimension. The adjacency structure $\mathbf{A} \in \{0, 1\}^{N \times N}$ encodes the edge connectivity. The encoded scene graph features serve as the input to the subsequent prompt-guided disentanglement pipeline.

AI-Generated

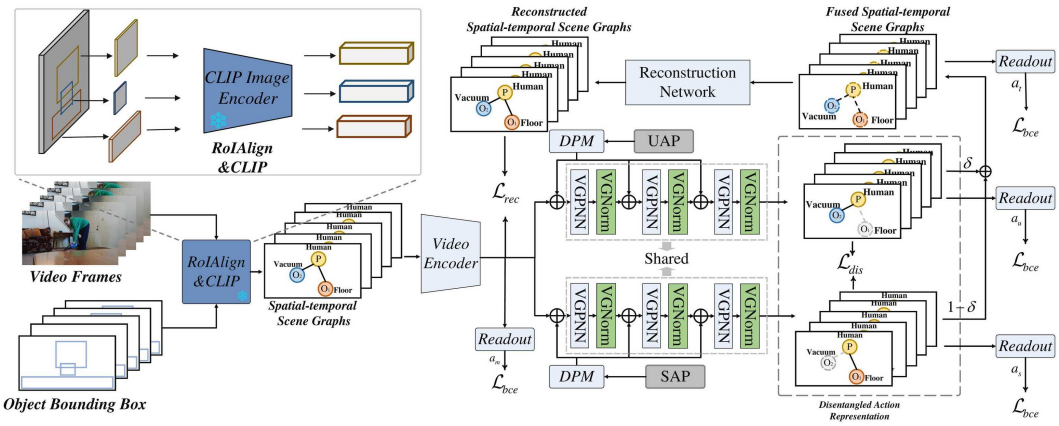

Figure 1: An overview of ProDA. A video is first converted into a Spatio-temporal Scene Graph (SSG) and encoded by a video encoder. The Dynamic Prompt Module (DPM) generates action-aware prompts from multi-hot action specifications. These prompts guide the VGPNN to parse the scene graph into a Specified Action Part (SAP) and an Unspecified Action Part (UAP). An Action Disentanglement Loss jointly ensures the two representations are complementary.

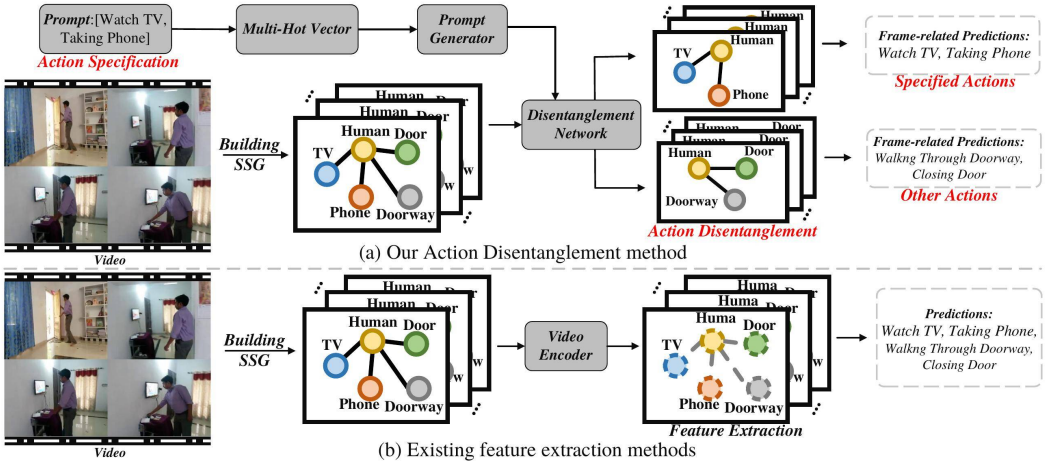

Figure 2: Comparison between (a) our proposed Prompt-guided Representation Disentanglement method and (b) existing methods using SSG. Unlike existing methods that produce a single unified representation, ProDA produces action-specific (SAP) and complementary (UAP) representations conditioned on user-specified action prompts.

3.3 Dynamic Prompt Module (DPM)

The Dynamic Prompt Module generates action-aware graph prompts conditioned on a user-specified action query. The query is represented as a multi-hot vector $\mathbf{q} \in \{0,1\}^C$ indicating which actions are of interest. Importantly, ProDA constructs two complementary query vectors: a *Specified Action Prompt* (SAP query) $\mathbf{q}_s$ that encodes the actions of interest, and an *Unspecified Action Prompt* (UAP query) $\mathbf{q}_u$ that encodes the remaining actions.

The DPM maps each query to a set of learnable prompt tokens via a lightweight network. Concretely, given a node feature sequence $\mathbf{X}_{seq} \in \mathbb{R}^{n \times b \times d}$ (where n is the sequence length and b is the batch size), the DPM first computes a task token by projecting the query:

$$\mathbf{p}^{task} = \mathrm{LN}(\mathbf{W}^p \mathbf{q} + \mathbf{X}_{seq}), \tag{1}$$

where $\mathbf{W}^p \in \mathbb{R}^{d \times C}$ is a learnable projection matrix and $\mathrm{LN}(\cdot)$ denotes Layer Normalization. A gating network then computes importance weights over K learnable prompt templates:

$$\mathbf{w} = \sigma\big(\mathbf{W}^g \mathbf{p}^{task}\big) \in \mathbb{R}^K, \tag{2}$$

where σ is the sigmoid activation. The final prompt vector is computed as a weighted mixture of the K prompt templates $\{\mathbf{T}_k\}_{k=1}^{K}$:

$$\mathbf{p} = \mathbf{X}_{seq} + \sum_{k=1}^{K} w_k \mathbf{T}_k(\mathbf{q}), \tag{3}$$

where each $\mathbf{T}_k(\mathbf{q}) = \mathbf{W}_k^t \mathbf{q}$ is a query-conditioned template. This design allows the DPM to produce dynamic, input-dependent prompts rather than static task embeddings, improving adaptation to diverse action queries.

3.4 Video Graph Parsing Neural Network (VGPNN)

The VGPNN parses the SSG into action-specific subgraphs using the DPM-generated prompts. It is built upon a stack of L prompt-conditioned graph layers, each implementing a link–message–update scheme with temporal self-attention.

Prompt-conditioned graph layer. Each layer takes as input the current node features $\mathbf{H}^{(\ell)}$ and the action prompt $\mathbf{p}$ (either SAP or UAP), and updates the node features by:

$$\mathbf{H}^{(\ell+1)} = \text{TransformerEncoder}\Big(\mathbf{H}^{(\ell)} + \text{DPM}\Big(\mathbf{H}^{(\ell)}, \mathbf{q}\Big)\Big), \tag{4}$$

where TransformerEncoder$(\cdot)$ applies multi-head self-attention followed by a feed-forward network. The prompt injection adds the DPM output to the node features before self-attention, conditioning the attention computation on the action query.

Temporal self-attention. To model temporal dependencies between nodes across frames, the self-attention in each layer operates over temporal neighborhoods. Specifically, nodes are organized into batches by frame, and self-attention is applied across all nodes within the same batch, enabling the model to reason about temporal evolution of object relationships.

Dual-stream disentanglement. ProDA maintains two parallel streams of VGPNN layers: one conditioned on the SAP query ($\mathbf{q}_s$) and one conditioned on the UAP query ($\mathbf{q}_u$). The two streams share the same architecture but use different DPM branches (with separate learnable parameters), producing distinct features $\mathbf{f}_s$ (SAP features) and $\mathbf{f}_u$ (UAP features). This dual-stream design enables the model to simultaneously learn action-specific and complementary representations.

3.5 Video Graph Normalization (VGNorm)

Standard normalization schemes such as Layer Normalization [2], Batch Normalization [11], and GraphNorm [4] do not account for the temporal structure of video scene graphs. We introduce **Video Graph Normalization (VGNorm)**, a normalization scheme tailored for spatio-temporal graphs.

VGNorm enforces two complementary objectives:

1. **Temporal consistency**: Node features that represent the same object across different frames should have consistent statistics. VGNorm normalizes each node's features across its temporal trajectory.
2. **Graph-level heterogeneity**: Different node types (e.g., persons vs. objects) should maintain distinct feature distributions. VGNorm preserves this heterogeneity by applying normalization within each node type independently.

Formally, for a node v of type $\tau(v)$ with feature trajectory $\{\mathbf{h}_v^t\}_{t=1}^{T}$, VGNorm computes:

$$\hat{\mathbf{h}}_v^t = \frac{\mathbf{h}_v^t - \mu_{\tau(v)}}{\sqrt{\sigma_{\tau(v)}^2 + \epsilon}} \cdot \boldsymbol{\gamma}_{\tau(v)} + \boldsymbol{\beta}_{\tau(v)}, \tag{5}$$

where $\mu_{\tau(v)}$ and $\sigma_{\tau(v)}$ are the mean and standard deviation computed over all nodes of type $\tau(v)$ across all frames, and $\boldsymbol{\gamma}_{\tau(v)}, \boldsymbol{\beta}_{\tau(v)}$ are learnable affine parameters per node type. This scheme captures the temporal structure of scene graphs while preserving semantic distinctions between node types.

AI-Generated

3.6 Action Disentanglement Loss

To ensure the SAP and UAP are both complementary and complete, we design an **Action Disentanglement Loss (AD Loss)** that combines two objectives.

Disentanglement loss $\mathcal{L}_{dis}$. The disentanglement loss minimizes the correlation between the SAP and UAP features. To avoid over-penalizing trivially decorrelated representations, we apply a margin:

$$\mathcal{L}_{dis} = \text{ReLU}\left(\frac{|\langle \tilde{\mathbf{f}}_s, \tilde{\mathbf{f}}_u \rangle|}{\|\tilde{\mathbf{f}}_s\|_2 \|\tilde{\mathbf{f}}_u\|_2} - \delta \right), \tag{6}$$

where $\tilde{\mathbf{f}}_s = \mathbf{f}_s - \bar{\mathbf{f}}_s$ and $\tilde{\mathbf{f}}_u = \mathbf{f}_u - \bar{\mathbf{f}}_u$ are the mean-centered features, and $\delta = 0.4$ is the correlation margin. This loss only penalizes correlations that exceed the margin, allowing some tolerance for natural feature overlap.

Reconstruction loss $\mathcal{L}_{res}$. The reconstruction loss ensures that the two subgraphs are jointly complete—that is, together they can reconstruct the original mixed feature representation $\mathbf{f}_m$:

$$\mathcal{L}_{res} = \|\text{Reconstruct}(\mathbf{f}_s, \mathbf{f}_u) - \mathbf{f}_m\|_2^2, \tag{7}$$

where Reconstruct$(\cdot)$ is a lightweight MLP-based reconstruction network. This ensures neither subgraph loses important information.

The total AD Loss is:

$$\mathcal{L}_{AD} = \lambda_1 \mathcal{L}_{res} + \lambda_2 \mathcal{L}_{dis}, \tag{8}$$

where λ_1 and λ_2 are balancing hyperparameters.

Classification loss. The final action classification is performed on the SAP features $\mathbf{f}_s$ using a standard cross-entropy loss for multi-label action recognition:

$$\mathcal{L}_{cls} = \text{BCE}(\hat{\mathbf{y}}, \mathbf{y}), \tag{9}$$

where $\hat{\mathbf{y}}$ are the predicted action probabilities and $\mathbf{y}$ is the ground-truth multi-hot label vector.

The full training objective is:

$$\mathcal{L} = \mathcal{L}_{cls} + \mathcal{L}_{AD}. \tag{10}$$

3.7 Frame-level Localization via Readout

As a byproduct of the graph parsing process, ProDA produces frame-level attention scores $\mathbf{s} \in [0, 1]^T$ via a readout function applied to the SAP features. These scores indicate how much each frame contributes to the predicted action, providing emergent temporal localization without any explicit localization supervision. At inference time, frames with high scores $s_t > \theta$ (for a threshold θ) are predicted as action-relevant.

4 Experiments

4.1 Datasets and Evaluation Metrics

Charades. Charades [26] is a large-scale video dataset of 9,848 videos collected by crowdsourcing people performing daily household activities. Videos average 30 seconds and are annotated with 157 activity classes in a multi-label fashion, reflecting the co-occurrence of multiple simultaneous activities. We follow the standard evaluation protocol and report mean Average Precision (mAP) on the validation set.

SportsHHI. SportsHHI [34] is a dataset for human-human interaction (HHI) detection in sports videos, containing 34 high-level interaction classes from basketball and volleyball, with 118,075 bounding boxes and 50,649 interaction instances annotated on 11,398 keyframes. We report mAP and recall at various spatio-temporal overlap thresholds (R@150, R@100, R@50, R@20).

AI-Generated

Table 1: Multi-label action recognition performance comparison on the Charades's validation set in term of mAP. SSG:ground truth SSG. Bbox: bounding box from ground truth SSG.

model	pretrain	Modality	mAP	model	pretrain	Modality	mAP
SGFB+NL [13]	K400	RGB	44.3	SGFB+NL [13]	K400	RGB+SSG	60.3
I3D+NL [5]	K400	RGB	37.5	LaIAR [31]	K400	RGB+Bbox	63.6
OR2G+NL [22]	K400	RGB	44.9	OR2G [22]	K400	RGB+SSG	63.3
LaIAR+NL [31]	K400	RGB	45.1	LaIAR+NL [31]	K400	RGB+Bbox	67.4
VicTR(B/16) [15]	CLIP	RGB	50.1	OR2G+NL [22]	K400	RGB+SSG	67.5
VicTR(L/14) [15]	CLIP	RGB	57.6	**Ours(B/16)**	**CLIP**	**RGB+SSG**	**71.1**

Table 2: Human-Human Interaction Classification results in SportsHHI. SportsHHI* is our reimplementation based on the official SportsHHI code, with minor modifications (e.g., parameter size) to match the capacity of ProDA for fair comparison.

method	mAP	R@150	R@100	R@50	R@20	Params
STTran [6]	3.31	71.29	62.91	42.67	22.14	-
HORT [12]	3.75	78.57	67.78	50.33	26.96	-
SlowFast [10]	5.00	81.66	74.00	52.74	26.82	-
ACARN [23]	5.44	82.85	75.22	56.53	31.77	-
SportHHI [34] (baseline)	10.69	89.25	82.93	68.13	43.72	111.18M
SportsHHI* (reimpletmented)	10.16 (↓0.53)	90.07 (↑0.82)	84.83 (↑1.9)	68.40 (↑0.37)	40.16 (↓ 3.56)	123.11M
Ours (baseline+ProDA)	**13.55 (↑2.86)**	**92.54 (↑3.29)**	**87.91 (↑4.98)**	**72.69 (↑4.56)**	**47.81 (↑4.09)**	123.19M

4.2 Implementation Details

We use CLIP-B/16 [25] as the visual encoder for the Charades experiments and K400-pretrained features for comparison methods. The VGPNN consists of $L = 3$ prompt-conditioned graph layers with embedding dimension $d = 1792$, 8 attention heads, and feed-forward dimension 2048. The DPM uses $K = 10$ prompt templates and a hidden dimension of 1792. Dropout of 0.1 is applied throughout. The reconstruction network is a 3-layer MLP with GELU activations. We use the Adam optimizer with learning rate 1×10^{-4} and train for 20 epochs with batch size 32. The loss balancing parameters are $\lambda_1 = 1.0$ and $\lambda_2 = 1.0$, and the correlation margin is $\delta = 0.4$. For the SportsHHI experiments, we build upon the official SportsHHI baseline and add ProDA as a plug-in module.

4.3 Comparison with State-of-the-Art

Charades. Table 1 compares ProDA against existing methods on the Charades validation set. ProDA achieves **71.1 mAP** using RGB and SSG input with a CLIP-B/16 backbone, significantly outperforming all prior methods. Compared to OR2G+NL [22] (67.5 mAP) and LaIAR+NL [31] (67.4 mAP)—which also use SSG features—ProDA improves by 3.6 and 3.7 mAP respectively. This confirms the benefit of action-conditioned disentanglement over unified SSG processing. Compared to VicTR(L/14) [15] (57.6 mAP), which uses a larger CLIP backbone but only RGB input, ProDA with the smaller B/16 backbone and SSG input outperforms by 13.5 mAP, highlighting the complementary value of structured scene graph reasoning.

SportsHHI. Table 2 presents results on SportsHHI human-human interaction classification. ProDA achieves **13.55 mAP**, compared to 10.69 mAP for the SportsHHI baseline [34], a gain of +2.86 mAP. ProDA also improves recall across all thresholds: R@150 improves by +3.29, R@100 by +4.98, R@50 by +4.56, and R@20 by +4.09, demonstrating consistent and substantial improvements. Notably, ProDA adds only 0.08M parameters (from 123.11M to 123.19M), achieving these gains with minimal parameter overhead.

4.4 Ablation Studies

Effect of the Dynamic Prompt Module. Table 3 compares DPM against a SimplePrompt baseline that uses a static, non-adaptive prompt. DPM achieves **71.10 mAP** on the final action output (a_t) versus 68.07 for SimplePrompt, a gain of +3.03 mAP. On the pre-disentanglement mixed features (a_m), DPM achieves 59.04 vs. 57.80, showing that dynamic action-aware prompts improve both the raw feature quality and the disentangled representation.

AI-Generated

Table 3: Ablation of prompt

prompt type	a_tmAP (%)	a_mmAP (%)
SimplePrompt	68.07	57.80
DPM	**71.10**	**59.04**

Table 4: Ablation of normalization

norm type	a_tmAP (%)	a_mmAP (%)
LayerNorm [2]	68.12	57.96
BatchNorm [11]	65.39	58.20
GraphNorm [4]	68.61	58.32
VGNorm	**71.10**	**59.04**

Table 5: Ablation study of loss function on Charades dataset. ❻ denotes the baseline training only the video encoder without ProDA; ❶ denotes using ProDA with only the action classification loss.

	$\mathcal{L}_{res}$ w/o margin	$\mathcal{L}_{res}$	$\mathcal{L}_{dis}$ w/o margin	$\mathcal{L}_{dis}$	a_t mAP on Charades (%)	a_m mAP on Charades (%)
❶	-	-	-	-	67.45	57.38
❷	✓	-	✓	-	68.43	8.03
❸	-	-	-	✓	67.78	58.28
❹	-	✓	-	-	64.89	57.90
❺	-	✓	-	✓	**71.10**	**59.04**
❻	-	-	-	-	-	58.01

Table 6: Distractor-injected SAP

		IoU threshold 0.2	0.5	0.7	**Avg.**
θ	0.2	77.97	43.68	26.08	49.24
	0.5	64.25	33.70	20.78	39.57
	0.7	53.80	22.98	12.99	29.92
	Avg.	65.34	33.45	19.95	-

Table 7: Non-distractor-injected SAP

		IoU threshold 0.2	0.5	0.7	**Avg.**
θ	0.2	85.56	57.44	40.18	61.06
	0.5	74.44	43.43	27.75	48.53
	0.7	59.27	24.26	13.14	32.23
	Avg.	73.09	41.71	27.03	-

Effect of VGNorm. Table 4 ablates the choice of normalization in VGPNN. VGNorm achieves 71.10 mAP, substantially outperforming LayerNorm [2] (68.12), GraphNorm [4] (68.61), and BatchNorm [11] (65.39). The consistent improvement across all normalization baselines confirms that VGNorm's combined temporal consistency and graph-level heterogeneity enforcement is critical for effective spatio-temporal scene graph parsing.

Effect of the Action Disentanglement Loss. Table 5 provides a detailed ablation of individual loss components. The notation a_t mAP refers to the final action recognition performance, while a_m mAP measures the quality of the pre-disentanglement mixed features. Without any ProDA components (row ❶), the model achieves 67.45 mAP. Adding $\mathcal{L}_{dis}$ with margin (row ❺, our full model) yields the best performance at 71.10 mAP. We observe that:

- Using $\mathcal{L}_{res}$ without margin (row ❷) causes a_m mAP to collapse to 8.03, suggesting that unconstrained reconstruction forces the subgraphs to be trivially complementary.
- $\mathcal{L}_{dis}$ alone with margin (row ❸): 67.78 mAP, showing that disentanglement without reconstruction does not fully leverage complementarity.
- $\mathcal{L}_{res}$ alone with margin (row ❹): 64.89 mAP, the weakest configuration with ProDA active.
- The combination of $\mathcal{L}_{res}$ (with margin) and $\mathcal{L}_{dis}$ (with margin) gives the best result (row ❺).

4.5 Frame-level Temporal Localization

Emergent localization. Without any explicit temporal localization supervision, ProDA's readout function produces frame-level weights $\mathbf{s}$ that highlight action-relevant frames. We evaluate temporal localization using frame-level AP at various IoU thresholds.

Table 7 shows localization results with non-distractor-injected SAPs (i.e., prompts containing only ground-truth action labels). At threshold $\theta = 0.2$ and IoU 0.2, ProDA achieves 85.56 frame-level AP, with an average of **61.06** across IoU thresholds of 0.2/0.5/0.7. These results confirm that the disentangled SAP features encode meaningful temporal information aligned with action occurrences.

Robustness to distractor-injected prompts. To evaluate robustness, Table 6 reports results under distractor-injected SAPs, where additional false-positive action labels are mixed into the prompt. Even under this challenging condition, ProDA achieves an average of **49.24** frame-level AP at $\theta = 0.2$, demonstrating that the DPM and VGPNN are robust to prompt noise.

Classification robustness. Tables 8 and 9 further evaluate a_s mAP (the mAP of the SAP classifier) under varying numbers of specified action labels. In the non-distractor condition (Table 8), ProDA

AI-Generated

Table 8: Non-distractor-injected SAP. label nums indicates the length of the ground-truth label set for each video

label nums	a_s mAP	label nums	a_s mAP
1	100.00 ±0.0	9	99.80 ±0.3
2	100.00 ±0.0	10	99.45 ±0.6
3	100.00 ±0.0	11	99.62 ±0.4
4	99.66 ±0.4	12	99.10 ±1.0
5	99.80 ±0.2	13	99.56 ±0.6
6	99.82 ±0.3	14	98.98 ±1.1
7	99.98 ±0.0	15	99.19 ±1.2
8	99.88 ±0.1	16	99.80 ±0.4

Table 9: Distractor-injected SAP. label nums indicates the length of the ground-truth label set for each video

label nums	a_s mAP	label nums	a_s mAP
1	100.0 ±0.0	9	85.63 ±6.6
2	90.52 ±3.5	10	85.87 ±6.7
3	92.61 ±1.1	11	86.56 ±5.0
4	93.16 ±0.7	12	84.85 ±6.5
5	87.17 ±4.8	13	87.42 ±6.4
6	87.69 ±2.9	14	87.73 ±6.0
7	86.65 ±6.1	15	88.58 ±6.0
8	86.32 ±6.1	16	92.10 ±4.9

Figure 3: Frame-level weights s predicted by the readout function for different non-distractor-injected SAPs within the same video. Different action prompts produce distinct temporal attention patterns, revealing ProDA's emergent localization capability.

achieves near-perfect classification accuracy (99.1–100.0 mAP) across all label counts from 1 to 16, confirming reliable action specification. In the distractor condition (Table 9), performance degrades gracefully from 100.0 at 1 label to 84.85–92.61 for 4–16 labels, showing that the model maintains reasonable discrimination even under substantial prompt noise.

4.6 Visualization

Frame-level attention. Figure 3 visualizes the frame-level weights s_t predicted by the readout function for different non-distractor-injected SAPs within the same video. Different action prompts lead to distinct temporal attention patterns, highlighting action-relevant frames without explicit supervision. This demonstrates the interpretability advantage of ProDA: by changing the action prompt, users can inspect which frames the model deems relevant to different activities.

t-SNE visualization. Figure 4 shows t-SNE [20] visualizations of the disentangled action features across 157 classes on Charades. The SAP features form more compact, well-separated clusters compared to the undisentangled features, confirming that ProDA's disentanglement produces more discriminative action representations.

5 Conclusion

We have presented ProDA, a prompt-guided disentangled representation learning framework for video action recognition in multi-action scenarios. By conditioning graph-based feature disentanglement on user-specified action prompts, ProDA explicitly separates action-specific evidence (SAP) from complementary contextual information (UAP) within a Spatio-temporal Scene Graph representation. The Dynamic Prompt Module generates adaptive, action-aware prompts; the Video Graph Parsing Neural Network parses the SSG into complementary subgraphs; Video Graph Normalization enforces spatio-temporal consistency; and the Action Disentanglement Loss ensures the two parts are both decorrelated and jointly complete.

ProDA achieves state-of-the-art results on the Charades multi-label action recognition benchmark (71.1 mAP, CLIP-B/16) and yields consistent improvements on SportsHHI human-human interaction

AI-Generated

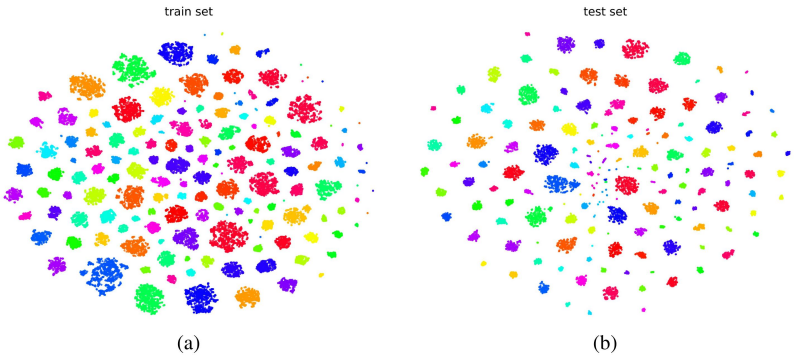

Figure 4: t-SNE visualization of disentangled action features across 157 classes on Charades [26]. The SAP features exhibit better class separation compared to undisentangled baselines.

detection (+2.86 mAP, improvements across all recall metrics) with minimal parameter overhead. Furthermore, ProDA exhibits emergent temporal localization ability, producing meaningful frame-level attention without any localization supervision.

Prompt-guided disentanglement on scene graphs represents a principled and interpretable approach to multi-action video understanding. Future work may explore extending ProDA to open-vocabulary action specifications, leveraging large language models to generate more semantically rich prompts, and applying the framework to grounded action localization tasks.

AI-Generated

References

[1] Anurag Arnab, Mostafa Dehghani, Georg Heigold, Chen Sun, Mario Lučić, and Cordelia Schmid. Vivit: A video vision transformer. In *Proceedings of the IEEE/CVF international conference on computer vision*, pages 6836–6846, 2021.

[2] Jimmy Lei Ba, Jamie Ryan Kiros, and Geoffrey E Hinton. Layer normalization. *arXiv preprint arXiv:1607.06450*, 2016.

[3] Gedas Bertasius, Heng Wang, and Lorenzo Torresani. Is space-time attention all you need for video understanding? In *ICML*, volume 2, page 4, 2021.

[4] Tianle Cai, Shengjie Luo, Keyulu Xu, Di He, Tie-yan Liu, and Liwei Wang. Graphnorm: A principled approach to accelerating graph neural network training. In *International Conference on Machine Learning*, pages 1204–1215. PMLR, 2021.

[5] Joao Carreira and Andrew Zisserman. Quo vadis, action recognition? a new model and the kinetics dataset. In *proceedings of the IEEE Conference on Computer Vision and Pattern Recognition*, pages 6299–6308, 2017.

[6] Y. Cong, W. Liao, H. Ackermann, et al. Spatial-temporal transformer for dynamic scene graph generation. In *Proceedings of the IEEE/CVF International Conference on Computer Vision*, pages 16372–16382, 2021.

[7] Emily L Denton et al. Unsupervised learning of disentangled representations from video. *Advances in neural information processing systems*, 30, 2017.

[8] Alexey Dosovitskiy, Lucas Beyer, Alexander Kolesnikov, Dirk Weissenborn, Xiaohua Zhai, Thomas Unterthiner, Mostafa Dehghani, Matthias Minderer, Georg Heigold, Sylvain Gelly, et al. An image is worth 16x16 words: Transformers for image recognition at scale. *arXiv preprint arXiv:2010.11929*, 2020.

[9] Taoran Fang, Yunchao Zhang, Yang Yang, Chunping Wang, and Lei Chen. Universal prompt tuning for graph neural networks. *Advances in Neural Information Processing Systems*, 36: 52464–52489, 2023.

[10] Christoph Feichtenhofer, Haoqi Fan, Jitendra Malik, et al. Slowfast networks for video recognition. In *Proceedings of the IEEE/CVF International Conference on Computer Vision*, pages 6202–6211, 2019.

[11] Sergey Ioffe and Christian Szegedy. Batch normalization: Accelerating deep network training by reducing internal covariate shift. In *International conference on machine learning*, pages 448–456. pmlr, 2015.

[12] Ji Ji, Rishabh Desai, and Juan Carlos Niebles. Detecting human-object relationships in videos. In *Proceedings of the IEEE/CVF International Conference on Computer Vision*, pages 8106–8116, 2021.

[13] Jingwei Ji, Ranjay Krishna, Li Fei-Fei, and Juan Carlos Niebles. Action genome: Actions as compositions of spatio-temporal scene graphs. In *Proceedings of the IEEE/CVF conference on computer vision and pattern recognition*, pages 10236–10247, 2020.

[14] Menglin Jia, Luming Tang, Bor-Chun Chen, Claire Cardie, Serge Belongie, Bharath Hariharan, and Ser-Nam Lim. Visual prompt tuning. In *European conference on computer vision*, pages 709–727. Springer, 2022.

[15] Kumara Kahatapitiya, Anurag Arnab, Arsha Nagrani, and Michael S Ryoo. Victr: Video-conditioned text representations for activity recognition. In *Proceedings of the IEEE/CVF Conference on Computer Vision and Pattern Recognition*, pages 18547–18558, 2024.

[16] Haoyang Li, Xin Wang, Ziwei Zhang, Zehuan Yuan, Hang Li, and Wenwu Zhu. Disentangled contrastive learning on graphs. *Advances in Neural Information Processing Systems*, 34: 21872–21884, 2021.

[17] Haoyang Li, Xin Wang, Zeyang Zhang, Haibo Chen, Ziwei Zhang, and Wenwu Zhu. Disentangled graph self-supervised learning for out-of-distribution generalization. In *Forty-first International Conference on Machine Learning*, 2024.

[18] Zhuolong Li, Xingao Li, Changxing Ding, and Xiangmin Xu. Disentangled pre-training for human-object interaction detection. In *Proceedings of the IEEE/CVF conference on computer vision and pattern recognition*, pages 28191–28201, 2024.

[19] Francesco Locatello, Stefan Bauer, Mario Lucic, Gunnar Raetsch, Sylvain Gelly, Bernhard Schölkopf, and Olivier Bachem. Challenging common assumptions in the unsupervised learning of disentangled representations. In *international conference on machine learning*, pages 4114–4124. PMLR, 2019.

[20] Laurens van der Maaten and Geoffrey Hinton. Visualizing data using t-sne. *Journal of machine learning research*, 9(Nov):2579–2605, 2008.

[21] Yujie Mo, Yajie Lei, Jialie Shen, Xiaoshuang Shi, Heng Tao Shen, and Xiaofeng Zhu. Disentangled multiplex graph representation learning. In *International conference on machine learning*, pages 24983–25005. PMLR, 2023.

[22] Yangjun Ou, Li Mi, and Zhenzhong Chen. Object-relation reasoning graph for action recognition. In *Proceedings of the IEEE/CVF Conference on Computer Vision and Pattern Recognition*, pages 20133–20142, 2022.

[23] Junting Pan, Siyu Chen, Mike Zheng Shou, et al. Actor-context-actor relation network for spatio-temporal action localization. In *Proceedings of the IEEE/CVF Conference on Computer Vision and Pattern Recognition*, pages 464–474, 2021.

[24] Siyuan Qi, Wenguan Wang, Baoxiong Jia, Jianbing Shen, and Song-Chun Zhu. Learning human-object interactions by graph parsing neural networks. In *Proceedings of the European conference on computer vision (ECCV)*, pages 401–417, 2018.

[25] Alec Radford, Jong Wook Kim, Chris Hallacy, Aditya Ramesh, Gabriel Goh, Sandhini Agarwal, Girish Sastry, Amanda Askell, Pamela Mishkin, Jack Clark, et al. Learning transferable visual models from natural language supervision. In *International conference on machine learning*, pages 8748–8763. PmLR, 2021.

AI-Generated

[26] Gunnar A Sigurdsson, Gül Varol, Xiaolong Wang, Ali Farhadi, Ivan Laptev, and Abhinav Gupta. Hollywood in homes: Crowdsourcing data collection for activity understanding. In *Computer Vision–ECCV 2016: 14th European Conference, Amsterdam, The Netherlands, October 11–14, 2016, Proceedings, Part I 14*, pages 510–526. Springer, 2016.

[27] Karen Simonyan and Andrew Zisserman. Two-stream convolutional networks for action recognition in videos. *Advances in neural information processing systems*, 27, 2014.

[28] Zhan Tong, Yibing Song, Jue Wang, and Limin Wang. Videomae: Masked autoencoders are data-efficient learners for self-supervised video pre-training. *Advances in neural information processing systems*, 35:10078–10093, 2022.

[29] Du Tran, Lubomir Bourdev, Rob Fergus, Lorenzo Torresani, and Manohar Paluri. Learning spatiotemporal features with 3d convolutional networks. In *Proceedings of the IEEE international conference on computer vision*, pages 4489–4497, 2015.

[30] Ashish Vaswani, Noam Shazeer, Niki Parmar, Jakob Uszkoreit, Llion Jones, Aidan N Gomez, Łukasz Kaiser, and Illia Polosukhin. Attention is all you need. *Advances in neural information processing systems*, 30, 2017.

[31] Ning Wang, Guangming Zhu, HS Li, Liang Zhang, Syed Afaq Ali Shah, and Mohammed Bennamoun. Language model guided interpretable video action reasoning. In *Proceedings of the IEEE/CVF Conference on Computer Vision and Pattern Recognition*, pages 18878–18887, 2024.

[32] Xiaolong Wang and Abhinav Gupta. Videos as space-time region graphs. In *Proceedings of the European conference on computer vision (ECCV)*, pages 399–417, 2018.

[33] Xin Wang, Hong Chen, Si'ao Tang, Zihao Wu, and Wenwu Zhu. Disentangled representation learning. *IEEE Transactions on Pattern Analysis and Machine Intelligence*, 2024.

[34] T. Wu, R. He, G. Wu, et al. Sportshhi: A dataset for human-human interaction detection in sports videos. In *Proceedings of the IEEE/CVF Conference on Computer Vision and Pattern Recognition*, pages 18537–18546, 2024.

[35] Boqiang Zhang, Hongtao Xie, Zuan Gao, and Yuxin Wang. Choose what you need: Disentangled representation learning for scene text recognition removal and editing. In *Proceedings of the IEEE/CVF conference on computer vision and pattern recognition*, pages 28358–28368, 2024.

[36] Kaiyang Zhou, Jingkang Yang, Chen Change Loy, and Ziwei Liu. Conditional prompt learning for vision-language models. In *Proceedings of the IEEE/CVF conference on computer vision and pattern recognition*, pages 16816–16825, 2022.

[37] Yizhe Zhu, Martin Renqiang Min, Asim Kadav, and Hans Peter Graf. S3vae: Self-supervised sequential vae for representation disentanglement and data generation. In *Proceedings of the IEEE/CVF Conference on Computer Vision and Pattern Recognition*, pages 6538–6547, 2020.

AI-Generated