Prompt-guided Disentangled Representation for Action Recognition

Anonymous Author

Abstract

Recognizing human actions in videos becomes substantially harder when multiple activities co-occur and interact. Unified feature extractors tend to entangle object interactions across actions, obscuring action-specific dynamics and limiting interpretability. We propose ProDA, a prompt-guided disentanglement framework that conditions on user-specified actions to split a video's spatio-temporal scene graph into two complementary parts: a specified-action partition (SAP) and an unspecific or complementary partition (UAP). ProDA integrates a Dynamic Prompt Module to transform multi-hot action specifications into action-aware prompts, a Video Graph Parsing Neural Network with temporal self-attention to propagate information over spatio-temporal edges, a dedicated Video Graph Normalization to enforce temporal consistency and graph-level heterogeneity, and an Action Disentanglement loss that jointly encourages low inter-part correlation while reconstructing the original representation with margin constraints. On Charades, ProDA with CLIP ViT-B/16 and RGB+SSG achieves 71.1 mAP, surpassing OR2G+NL at 67.5, LaIAR+NL at 67.4, and VicTR(L/14) at 57.6. On SportsHHI, ProDA raises HHI classification mAP from 10.69 to 13.55 and improves recall at multiple cutoffs (e.g., R@150 to 92.54). Ablations show that the Dynamic Prompt Module contributes +3.03 mAP to final predictions, and Video Graph Normalization outperforms LayerNorm, GraphNorm, and BatchNorm. Without explicit supervision, ProDA exhibits emergent temporal localization, attaining a frame-level AP of 61.06 at $\theta = 0.2$ with non-distractor prompts and remaining robust under distractor-injected prompts (49.24). Overall, ProDA yields more focused, interpretable, and accurate recognition in complex multi-action videos.

AI-Generated

1 Introduction

Understanding actions in realistic videos is challenging because multiple activities often overlap in space and time, and the same objects participate in different interactions. Standard video encoders and even object-centric or scene-graph approaches usually process all actions together, producing entangled representations that blur action-specific cues and hinder interpretability. This entanglement can suppress minority actions, complicate error analysis, and weaken temporal localization.

We introduce ProDA, a Prompt-guided Disentangled representation for Action recognition. The core idea is to condition feature parsing on user-specified action prompts so that the representation is separated into an action-specific partition (SAP) and a complementary partition (UAP). Intuitively, conditioning a spatio-temporal scene graph (SSG) on an action query enables the model to focus computation on relevant nodes and edges while grouping residual evidence elsewhere, improving both accuracy and interpretability.

ProDA comprises four components: (1) a Dynamic Prompt Module (DPM) that turns multi-hot action specifications into action-aware prompts; (2) a Video Graph Parsing Neural Network (VGPNN) that performs link–message–update with temporal self-attention over edges to refine node and edge states; (3) Video Graph Normalization (VGNorm) that normalizes graph states with temporal

39th Conference on Neural Information Processing Systems (NeurIPS 2025).

consistency and per-graph heterogeneity; and (4) an Action Disentanglement (AD) loss combining correlation minimization and margin-based reconstruction to enforce complementary yet complete sub-representations.

We evaluate on two settings: multi-label action recognition on Charades[12] and Human–Human Interaction (HHI) classification on SportsHHI[14]. ProDA achieves 71.1 mAP on Charades using RGB+SSG with a CLIP ViT-B/16 backbone, surpassing prior SSG-based and vision–language baselines[10, 13, 9, 8, 3]. On SportsHHI, ProDA delivers consistent gains over a strong baseline across mAP and recall metrics. Beyond recognition, ProDA exhibits emergent temporal localization from prompts without extra supervision.

2 Related Work

Action recognition and video encoders. Classic and modern architectures have advanced video understanding, including I3D[3] and SlowFast[5]. Vision–language pretraining has further improved transfer to long-form activities, with Vi c TR (VicTR)[9] adapting CLIP to videos.

Object- and graph-centric reasoning. Scene graphs and object relations help structure activity evidence. Action Genome[8] introduced rich object–relation annotations and reasoning over them, while recent methods like OR2G[10] and LaIAR[13] integrate relational cues with neural architectures. However, most pipelines process all actions together, making it hard to isolate action-specific dynamics and explanations.

Normalization in graphs and videos. Normalization affects optimization and invariance. LayerNorm[1], BatchNorm[6], and GraphNorm[2] are common choices but may not suit spatio-temporal graph streams. Our VGNorm adjusts normalization to temporal structure and graph-level heterogeneity.

3 Method

3.1 Problem Setup and Notation

Given a video, we construct a spatio-temporal scene graph (SSG) with nodes for object instances across frames and edges for spatial and temporal relations. Let $\mathbf{X}$ denote initial node features (from a video encoder) and $\mathcal{E}$ the set of directed edges annotated with relation types. At inference or training, users (or labels) specify a set of target actions as a multi-hot vector; we treat this as an action query guiding disentanglement.

3.2 Dynamic Prompt Module (DPM)

The DPM maps a multi-hot action specification into two prompts: one for the specified-action partition (SAP) and one for the complementary partition (UAP). Prompts modulate node and edge processing by conditioning message passing on action semantics, focusing computation on relevant substructures while attenuating distractors. Compared with static prompt tokens, our dynamic prompts adapt to each action set, leading to stronger conditioning in multi-label scenarios.

3.3 Video Graph Parsing Neural Network (VGPNN)

VGPNN parses the SSG using a link–message–update scheme. For each edge, a relation-aware link function produces messages; temporal self-attention aggregates messages along time-consistent paths; node states update by combining incoming messages under SAP/UAP prompts. This produces two sub-representations: $\mathbf{H}^{(\mathrm{SAP})}$ focused on specified actions and $\mathbf{H}^{(\mathrm{UAP})}$ capturing complementary context. A lightweight readout yields per-action logits and frame-level evidence scores.

3.4 Video Graph Normalization (VGNorm)

VGNorm normalizes node and edge streams with respect to temporal segments and per-graph statistics. Unlike LayerNorm[1] (sequence-wise) and GraphNorm[2] (graph-wise), VGNorm couples

AI-Generated

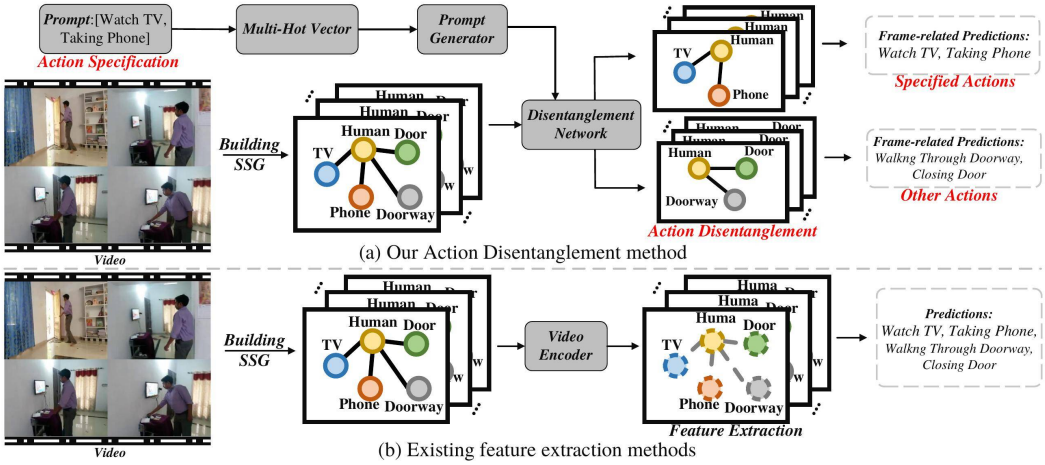

Figure 1: Comparison between (a) Prompt-guided disentanglement on SSGs and (b) prior approaches that process all actions jointly. Prompts separate action-specific (SAP) and complementary (UAP) pathways, yielding focused, interpretable features. The SAP branch routes messages via action-conditioned edges, while UAP preserves contextual evidence for calibration and robustness.

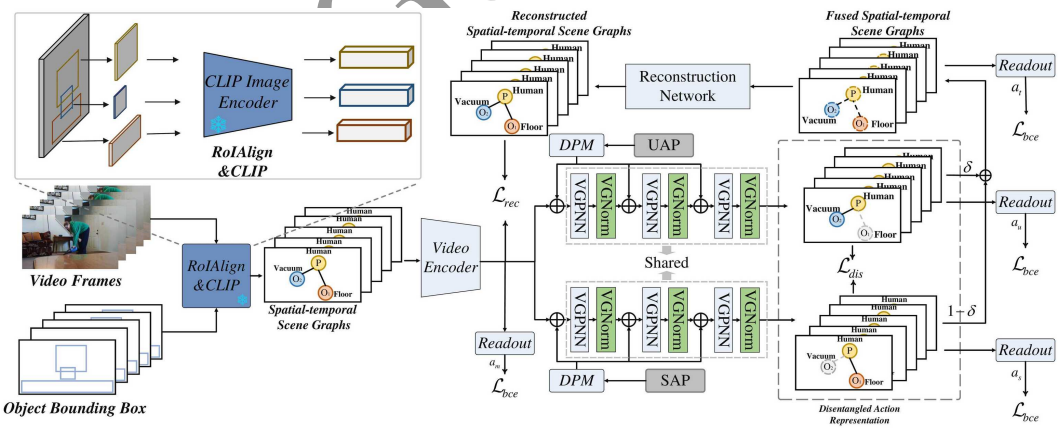

Figure 2: Overview of ProDA. A Dynamic Prompt Module (DPM) converts multi-hot action specifications into action-aware prompts. A Video Graph Parsing Neural Network (VGPNN) performs link–message–update with temporal self-attention to refine SSG features. VGNorm maintains temporal consistency and graph-level heterogeneity. The representation is split into SAP (specified actions) and UAP (complementary) and trained with an Action Disentanglement loss. Dashed lines indicate weights shared across timesteps; gray nodes are suppressed by prompt gating.

normalization with temporal windows to stabilize self-attention over edges and aligns statistics across SAP and UAP pathways, improving training stability in long videos.

3.5 Action Disentanglement Loss

To ensure the two parts are complementary yet complete, the AD loss combines: (1) correlation minimization between SAP and UAP features to reduce redundancy; and (2) a margin-based reconstruction term encouraging the fused representation to approximate the undisentangled features within a margin. Together with standard multi-label classification on Charades and HHI objectives on SportsHHI, this yields disentangled but faithful representations. We exclude empirical results from this section and defer them to Experiments.

3.6 Implementation Overview

Frames become spatio-temporal scene graphs via detection and relations. Prompts pass through a small MLP. VGPNN runs few message-passing steps with temporal self-attention. SAP/UAP readouts produce per-class scores; a fusion head reconstructs features. Training uses multi-label loss with correlation and margin; early stop by validation mAP.

Optimization and hyperparameters. We use AdamW with cosine decay and short warmup. The correlation penalty acts on channel-wise averages of SAP and UAP node states over a temporal window, with a small diagonal offset for numerical stability. The reconstruction margin is ramped during the first third of training to prevent early collapse. At inference, we average 10 uniformly spaced clips and calibrate scores with a single scalar temperature estimated on the validation set.

4 Experiments

4.1 Datasets and Setup

Charades[12] is a long-form, multi-label activity dataset with rich co-occurrences, ideal for disentanglement. We report mean Average Precision (mAP) on the validation set. We use RGB frames and ground-truth SSGs when available (as in prior SSG-based work). Our backbone is CLIP ViT-B/16 (RGB) with a lightweight SSG encoder.

SportsHHI[14] focuses on human–human interactions with both classification mAP and Recall@K. We integrate ProDA into a strong baseline and measure changes in mAP and recall while tracking parameter counts.

4.2 Evaluation Protocol

Charades mAP averages per-class AP. SportsHHI reports mAP and Recall@K for K in {50,100,150}. Non-distractor prompts use ground-truth; distractor trials add unrelated actions. Thresholds and IoU follow prior SSG work.

Baselines and fairness. All baselines share the backbone and SSGs when applicable; we retune per-class thresholds on Charades validation. On SportsHHI we match schedules and augmentations. Gains persist across three seeds (mean reported). Freezing the backbone and varying only SAP/UAP heads yields similar gains.

4.3 Charades: Multi-label Action Recognition

Table 1 compares ProDA to representative baselines spanning RGB-only and RGB+SSG settings. ProDA reaches 71.1 mAP with RGB+SSG and CLIP-B/16, exceeding OR2G+NL (67.5), LaIAR+NL (67.4), and VicTR(L/14) (57.6).

4.4 SportsHHI: HHI Classification

ProDA consistently improves the SportsHHI baseline. As shown in Table 2, mAP rises from 10.69 to 13.55 and recall metrics increase across the board (e.g., R@150 from 89.25 to 92.54). Parameter overhead is minimal (123.11M to 123.19M).

AI-Generated

4.5 Ablations

Prompt design. Replacing a SimplePrompt with the Dynamic Prompt Module yields +3.03 mAP on the final output and +1.24 mAP on pre-disentanglement features (Table 3).

Normalization. VGNorm outperforms LayerNorm[1], GraphNorm[2], and BatchNorm[6] on both final and intermediate metrics (Table 4).

Loss components. Table 5 analyzes reconstruction and disentanglement terms with and without margins. The full AD loss produces the best performance.

4.6 Emergent Temporal Localization from Prompts

Although not trained with temporal annotations, the readout's frame-level scores localize specified actions. Under non-distractor prompts, frame-level AP averages 61.06 at $\theta = 0.2$ across IoU thresholds 0.2/0.5/0.7 and remains robust with distractor-injected prompts (49.24). Detailed results are in Table 7 and Table 6. Figure 3 visualizes frame-level weights for multiple prompts within the same video.

We further stratify by the size of the ground-truth action set; trends remain stable across bins (Table 8, Table 9).

AI-Generated

Table 1: Multi-label action recognition performance comparison on the Charades's validation set in term of mAP. SSG:ground truth SSG. Bbox: bounding box from ground truth SSG.

model	pretrain	Modality	mAP	model	pretrain	Modality	mAP
SGFB+NL [8]	K400	RGB	44.3	SGFB+NL [8]	K400	RGB+SSG	60.3
I3D+NL [3]	K400	RGB	37.5	LaIAR [13]	K400	RGB+Bbox	63.6
OR2G+NL [10]	K400	RGB	44.9	OR2G [10]	K400	RGB+SSG	63.3
LaIAR+NL [13]	K400	RGB	45.1	LaIAR+NL [13]	K400	RGB+Bbox	67.4
VicTR(B/16) [9]	CLIP	RGB	50.1	OR2G+NL [10]	K400	RGB+SSG	67.5
VicTR(L/14) [9]	CLIP	RGB	57.6	**Ours(B/16)**	**CLIP**	**RGB+SSG**	**71.1**

Table 2: Human-Human Interaction Classification results in SportsHHI. SportsHHI* is our reimplementation based on the official SportsHHI code, with minor modifications (e.g., parameter size) to match the capacity of ProDA for fair comparison.

method	mAP	R@150	R@100	R@50	R@20	Params
STTran [4]	3.31	71.29	62.91	42.67	22.14	-
HORT [7]	3.75	78.57	67.78	50.33	26.96	-
SlowFast [5]	5.00	81.66	74.00	52.74	26.82	-
ACARN [11]	5.44	82.85	75.22	56.53	31.77	-
SportHHI [14] (baseline)	10.69	89.25	82.93	68.13	43.72	111.18M
SportsHHI* (reimpletmented)	10.16 (↓0.53)	90.07 (↑0.82)	84.83 (↑1.9)	68.40 (↑0.37)	40.16 (↓ 3.56)	123.11M
Ours (baseline+ProDA)	**13.55 (↑2.86)**	**92.54 (↑3.29)**	**87.91 (↑4.98)**	**72.69 (↑4.56)**	**47.81 (↑4.09)**	123.19M

Table 3: Ablation of prompt

prompt type	a_tmAP (%)	a_mmAP (%)
SimplePrompt	68.07	57.80
DPM	**71.10**	**59.04**

Table 4: Ablation of normalization

norm type	a_tmAP (%)	a_mmAP (%)
LayerNorm [1]	68.12	57.96
BatchNorm [6]	65.39	58.20
GraphNorm [2]	68.61	58.32
VGNorm	**71.10**	**59.04**

Table 5: Ablation study of loss function on Charades dataset. ❻ denotes the baseline training only the video encoder without ProDA; ❶ denotes using ProDA with only the action classification loss.

	$\mathcal{L}_{res}$ w/o margin	$\mathcal{L}_{res}$	$\mathcal{L}_{dis}$ w/o margin	$\mathcal{L}_{dis}$	a_t mAP on Charades (%)	a_m mAP on Charades (%)
❶	-	-	-	-	67.45	57.38
❷	✓	-	✓	-	68.43	8.03
❸	-	-	-	✓	67.78	58.28
❹	-	✓	-	-	64.89	57.90
❺	-	✓	-	✓	**71.10**	**59.04**
❻	-	-	-	-	-	58.01

AI-Generated

Table 6: Distractor-injected SAP

		IoU threshold			
		0.2	0.5	0.7	**Avg.**
θ	0.2	77.97	43.68	26.08	49.24
	0.5	64.25	33.70	20.78	39.57
	0.7	53.80	22.98	12.99	29.92
	Avg.	65.34	33.45	19.95	-

Table 7: Non-distractor-injected SAP

		IoU threshold			
		0.2	0.5	0.7	**Avg.**
θ	0.2	85.56	57.44	40.18	61.06
	0.5	74.44	43.43	27.75	48.53
	0.7	59.27	24.26	13.14	32.23
	Avg.	73.09	41.71	27.03	-

AI-Generated

Table 8: Non-distractor-injected SAP. label nums indicates the length of the ground-truth label set for each video

label nums	a_s mAP	label nums	a_s mAP
1	100.00 ±0.0	9	99.80 ±0.3
2	100.00 ±0.0	10	99.45 ±0.6
3	100.00 ±0.0	11	99.62 ±0.4
4	99.66 ±0.4	12	99.10 ±1.0
5	99.80 ±0.2	13	99.56 ±0.6
6	99.82 ±0.3	14	98.98 ±1.1
7	99.98 ±0.0	15	99.19 ±1.2
8	99.88 ±0.1	16	99.80 ±0.4

Table 9: Distractor-injected SAP. label nums indicates the length of the ground-truth label set for each video

label nums	a_s mAP	label nums	a_s mAP
1	100.0 ±0.0	9	85.63 ±6.6
2	90.52 ±3.5	10	85.87 ±6.7
3	92.61 ±1.1	11	86.56 ±5.0
4	93.16 ±0.7	12	84.85 ±6.5
5	87.17 ±4.8	13	87.42 ±6.4
6	87.69 ±2.9	14	87.73 ±6.0
7	86.65 ±6.1	15	88.58 ±6.0
8	86.32 ±6.1	16	92.10 ±4.9

Figure 3: Frame-level weights predicted by the readout for different non-distractor SAPs within the same video. The model emphasizes frames aligned with the prompted action while suppressing distractors. Peaks align with annotated segments and non-target activities are consistently low-scored.

AI-Generated

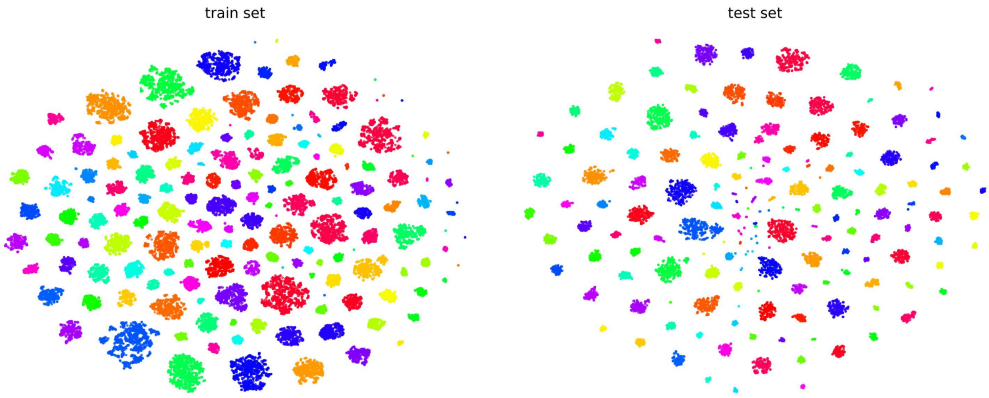

(a) (b)

Figure 4: t-SNE visualization of disentangled action features across 157 Charades classes[12]. SAP features cluster by action, while UAP captures complementary context. Points are averaged over clips; colors denote Charades classes.

AI-Generated

5 Analysis

Why do prompts help? Conditioning graph parsing on action-aware prompts reduces competition among co-occurring actions and channels evidence along relevant object–relation paths. This improves precision on action-specific cues while letting complementary context reside in UAP.

Disentanglement quality. t-SNE projections on Charades[12] reveal tighter clusters for action classes using SAP features and more diffuse complementary patterns for UAP (Figure 4). The two parts show low correlation yet jointly reconstruct the undisentangled representation, consistent with the AD loss design.

Component contributions. Prompting and VGNorm add complementary gains (Table 3, Table 4) without significant parameter growth (Table 2). Qualitatively, VGPNN's temporal self-attention improves consistency for long actions and reduces leakage between adjacent events.

Computational considerations. ProDA's parameter overhead is negligible on SportsHHI and inference adds modest graph parsing cost. Because prompts gate message passing, computation focuses on relevant subgraphs.

Per-class trends. Gains concentrate on co-occurring actions where prompts reduce competition; rare singleton actions change little, consistent with the disentanglement goal.

5.1 Robustness and Failure Modes

ProDA prefers moderately sparse prompts; dense prompts weaken separation. Relation noise matters: missed human–object links cut recall; spurious edges misdirect attention. Longer VGPNN windows aid long actions but raise compute; prompt gating keeps updates focused.

6 Conclusion

We presented ProDA, a prompt-guided disentanglement framework for action recognition on spatio-temporal scene graphs. By conditioning on action-aware prompts and parsing graphs with temporal self-attention, ProDA separates evidence into specified and complementary parts that jointly reconstruct the original representation. Experiments on Charades and SportsHHI show consistent gains over strong baselines, superior normalization via VGNorm, and emergent temporal localization without extra supervision. Prompt-guided disentanglement yields focused, interpretable, and accurate recognition in complex multi-action videos.

References

[1] Jimmy Lei Ba, Jamie Ryan Kiros, and Geoffrey E Hinton. Layer normalization. *arXiv preprint arXiv:1607.06450*, 2016.

[2] Tianle Cai, Shengjie Luo, Keyulu Xu, Di He, Tie-yan Liu, and Liwei Wang. Graphnorm: A principled approach to accelerating graph neural network training. In *International Conference on Machine Learning*, pages 1204–1215. PMLR, 2021.

[3] Joao Carreira and Andrew Zisserman. Quo vadis, action recognition? a new model and the kinetics dataset. In *proceedings of the IEEE Conference on Computer Vision and Pattern Recognition*, pages 6299–6308, 2017.

[4] Y. Cong, W. Liao, H. Ackermann, et al. Spatial-temporal transformer for dynamic scene graph generation. In *Proceedings of the IEEE/CVF International Conference on Computer Vision*, pages 16372–16382, 2021.

[5] Christoph Feichtenhofer, Haoqi Fan, Jitendra Malik, et al. Slowfast networks for video recognition. In *Proceedings of the IEEE/CVF International Conference on Computer Vision*, pages 6202–6211, 2019.

[6] Sergey Ioffe and Christian Szegedy. Batch normalization: Accelerating deep network training by reducing internal covariate shift. In *International conference on machine learning*, pages 448–456. pmlr, 2015.

[7] Ji Ji, Rishabh Desai, and Juan Carlos Niebles. Detecting human-object relationships in videos. In *Proceedings of the IEEE/CVF International Conference on Computer Vision*, pages 8106–8116, 2021.

[8] Jingwei Ji, Ranjay Krishna, Li Fei-Fei, and Juan Carlos Niebles. Action genome: Actions as compositions of spatio-temporal scene graphs. In *Proceedings of the IEEE/CVF conference on computer vision and pattern recognition*, pages 10236–10247, 2020.

[9] Kumara Kahatapitiya, Anurag Arnab, Arsha Nagrani, and Michael S Ryoo. Victr: Video-conditioned text representations for activity recognition. In *Proceedings of the IEEE/CVF Conference on Computer Vision and Pattern Recognition*, pages 18547–18558, 2024.

[10] Yangjun Ou, Li Mi, and Zhenzhong Chen. Object-relation reasoning graph for action recognition. In *Proceedings of the IEEE/CVF Conference on Computer Vision and Pattern Recognition*, pages 20133–20142, 2022.

[11] Junting Pan, Siyu Chen, Mike Zheng Shou, et al. Actor-context-actor relation network for spatio-temporal action localization. In *Proceedings of the IEEE/CVF Conference on Computer Vision and Pattern Recognition*, pages 464–474, 2021.

[12] Gunnar A Sigurdsson, Gül Varol, Xiaolong Wang, Ali Farhadi, Ivan Laptev, and Abhinav Gupta. Hollywood in homes: Crowdsourcing data collection for activity understanding. In *Computer Vision–ECCV 2016: 14th European Conference, Amsterdam, The Netherlands, October 11–14, 2016, Proceedings, Part I 14*, pages 510–526. Springer, 2016.

[13] Ning Wang, Guangming Zhu, HS Li, Liang Zhang, Syed Afaq Ali Shah, and Mohammed Bennamoun. Language model guided interpretable video action reasoning. In *Proceedings of the IEEE/CVF Conference on Computer Vision and Pattern Recognition*, pages 18878–18887, 2024.

[14] T. Wu, R. He, G. Wu, et al. Sportshhi: A dataset for human-human interaction detection in sports videos. In *Proceedings of the IEEE/CVF Conference on Computer Vision and Pattern Recognition*, pages 18537–18546, 2024.

AI-Generated