Approximate Domain Unlearning for Vision-Language Models

Anonymous Authors

Abstract

We study approximate domain unlearning for vision-language models (VLMs): given a pretrained model and a set of domains to forget, the goal is to suppress predictions on the forgotten domains while preserving recognition on the retained ones. This setting is harder than class-level unlearning because the same semantic class can appear across multiple visual domains, causing domain cues to remain entangled in CLIP features. We propose Approximate Domain Unlearning (ADU), a prompt-based adaptation framework built on CLIP that combines two components: Domain Disentangling Loss (DDL), which trains a domain classifier with cross-entropy while maximizing inter-domain maximum mean discrepancy, and an Instance-wise Prompt Generator (InstaPG), which refines deep visual prompts through cross-attention to image patch tokens so prompts can respond to image-specific domain evidence. ADU is trained with retained-domain classification loss, forgotten-domain entropy maximization, and DDL jointly. Across an ImageNet real-versus-sketch setting, Office-Home, and Mini DomainNet, ADU consistently improves the harmonic mean between retained-domain accuracy and forgotten-domain error over strong CLIP adaptation baselines. For example, the harmonic mean improves from 74.66 to 77.02 on ImageNet, from 52.59 to 69.96 on Office-Home when one domain is forgotten, and from 62.07 to 75.56 on Mini DomainNet under the same setting. Analyses show that ADU substantially increases domain separability, from 25.80% before unlearning to 79.43% after unlearning on Office-Home, while visualizations indicate clearer domain clustering and more selective attention behavior.

AI-generated

1 Introduction

Pretrained vision-language models such as CLIP transfer well across datasets and styles because they align broad visual and textual supervision in a shared space [Radford et al., 2021]. That breadth is useful for open-world recognition, but it is not always desirable after deployment. In practical systems, operators may want a model to retain only a subset of domains and suppress behavior on the rest. A product catalog may require only studio photographs but not sketches; a safety-critical classifier may need to ignore stylized or synthetic domains that induce spurious predictions; and data-governance constraints may require removing the influence of a particular source domain without retraining the full foundation model. These use cases require *domain-selective forgetting*.

Domain-selective forgetting is distinct from the more common class-level unlearning problem [Cao and Yang, 2015, Guo et al., 2019, Neel et al., 2021, Sekhari et al., 2021, Xu et al., 2024, Huang et al., 2024b]. In domain unlearning, the semantic label space is shared across retained and forgotten subsets, so forgetting cannot be achieved by simply suppressing particular classes. A car in a real photo and a car in a sketch should map to different domain behaviors but the same class identity. This is especially challenging for VLMs because domain cues and class cues are strongly entangled in pretrained features. Straightforward prompt tuning with retained-domain classification and forgotten-domain entropy maximization often preserves semantics but lacks an explicit mechanism for isolating domain information.

39th Conference on Neural Information Processing Systems (NeurIPS 2025).

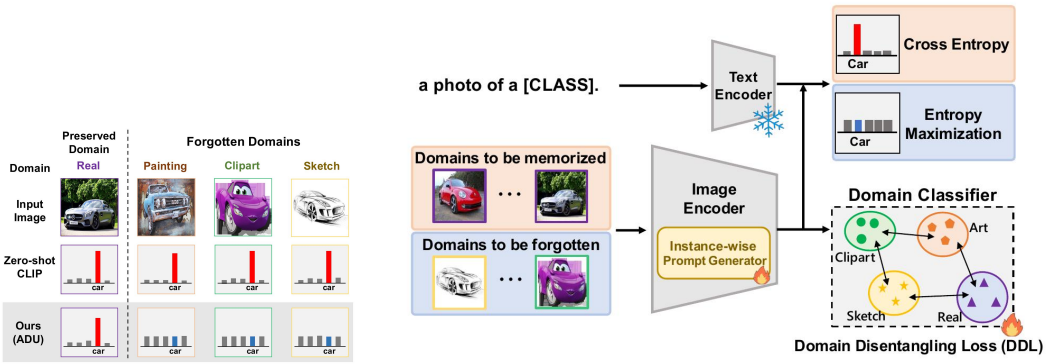

(a) Approximate domain unlearning.

(b) ADU optimizes retained-domain classification, forgotten-domain entropy maximization, and Domain Disentangling Loss.

Figure 1: Overview of the problem and the proposed method. ADU preserves classification behavior on retained domains while making predictions on forgotten domains uncertain, and it explicitly separates domain information through DDL.

This paper formulates *Approximate Domain Unlearning* (ADU) for VLMs and proposes a simple, fully differentiable solution. ADU keeps the CLIP backbone largely frozen and learns prompts and a lightweight domain head. The first ingredient is *Domain Disentangling Loss* (DDL), which combines domain-classification cross-entropy with maximization of pairwise maximum mean discrepancy (MMD) [Gretton et al., 2012, Long et al., 2015] across domains. This explicitly enlarges domain separation in the learned domain-prediction space, making retained and forgotten domains easier to treat differently. The second ingredient is an *Instance-wise Prompt Generator* (InstaPG), which updates deep visual prompts using cross-attention over patch tokens. Instead of applying one shared visual prompt to all images, InstaPG adapts the prompt to the domain evidence present in each instance.

Our experiments use CLIP ViT-B/16 with deep prompt learning on three multi-domain benchmarks: an ImageNet real-versus-sketch setting [Deng et al., 2009, Wang et al., 2019], Office-Home [Venkateswara et al., 2017], and Mini DomainNet [Peng et al., 2019, Zhou et al., 2021]. ADU consistently improves the balance between remembering retained domains and forgetting target domains. On Office-Home, the harmonic mean H improves from 52.59 to 69.96 when one domain is forgotten, and continues to improve under forgetting two and three domains. On Mini DomainNet, the corresponding gains are 62.07 to 75.56, 61.97 to 77.03, and 68.82 to 79.00 in the main comparison. Beyond aggregate accuracy, ADU also increases domain separability and produces clearer domain clusters in t-SNE visualizations.

Our contributions are:

1. We formulate approximate domain unlearning for VLMs, a setting in which forgetting targets are domains rather than classes.
2. We propose DDL, a domain-separation objective that combines domain cross-entropy with pairwise MMD maximization, and InstaPG, an instance-conditioned prompt mechanism for image-specific domain adaptation.
3. We show that the combination yields substantially better retained/forgotten trade-offs than strong CLIP tuning baselines across multiple datasets and forgetting regimes, with supporting ablations and visual analyses.

2 Related Work

2.1 Machine Unlearning

Machine unlearning studies how to remove the influence of selected training data or concepts from a learned model [Cao and Yang, 2015, Ginart et al., 2019, Graves et al., 2021, Neel et al., 2021, Sekhari

AI-Generated

et al., 2021, Ullah et al., 2021, Xu et al., 2024]. A line of work seeks exact or certified guarantees, often in restricted model classes [Guo et al., 2019]. For deep networks, approximate unlearning methods are more common because retraining-scale guarantees are expensive to obtain [Huang et al., 2024b, Fan et al., 2024]. Most prior work, however, targets individual samples, classes, or concepts. Domain-level forgetting is different: the same classes remain valid, but only within retained domains. Our work therefore focuses on *selective domain suppression* rather than removing an entire class or subset of instances.

2.2 Prompt-Based Adaptation for Vision-Language Models

Prompt learning is an effective way to adapt CLIP with limited supervision while keeping most pretrained weights fixed [Zhou et al., 2022b, Khattak et al., 2023]. Related methods fine-tune prompts at test time [Shu et al., 2022], modify selected CLIP parameters [Li et al., 2024], or show that carefully designed linear probes remain very strong [Huang et al., 2024a]. These methods improve downstream performance, but they are not designed to forget specific domains. In particular, standard prompt tuning usually pushes all training samples toward better confidence, which conflicts with our objective of retaining confidence on one subset of domains while increasing uncertainty on another.

2.3 Domain Generalization and Domain-Aware Prompting

Domain shift has been studied extensively in domain adaptation and domain generalization [Patel et al., 2015, Zhou et al., 2022a]. For CLIP-style models, recent work exploits prompt learning to encourage domain invariance or cross-domain transfer [Singha et al., 2023, Cho et al., 2023, Khattak et al., 2023, Yu et al., 2024, Wang et al., 2024]. These methods usually aim to *remove* harmful domain variation so a model generalizes better to unseen domains. Our goal is the opposite: we want domain information to remain *accessible and controllable* so selected domains can be forgotten while others are preserved. This is why ADU uses an explicit disentangling objective rather than only seeking domain invariance.

3 Method

3.1 Problem Setting

Let $\mathcal{D} = \{d_1, \ldots, d_M\}$ be the set of domains and $\mathcal{Y}$ the shared class set. Each training sample is a triplet (x, y, d) with image x, class label $y \in \mathcal{Y}$, and domain label $d \in \mathcal{D}$. Given a subset of domains $\mathcal{D}_{\text{forget}} \subset \mathcal{D}$, the retained domains are $\mathcal{D}_{\text{mem}} = \mathcal{D} \setminus \mathcal{D}_{\text{forget}}$.

The goal of approximate domain unlearning is asymmetric: on retained domains, the model should remain predictive for the class label; on forgotten domains, it should become uninformative for class prediction. We call the problem *approximate* because we do not attempt certified equivalence to retraining without the forgotten domain data. Instead, we optimize behavioral surrogates that encourage accurate retained-domain predictions and high uncertainty on forgotten-domain inputs.

We instantiate this setting on CLIP [Radford et al., 2021]. The CLIP image and text backbones remain frozen, while deep prompt parameters, an instance-conditioned cross-attention module, and a lightweight domain classifier are optimized.

3.2 Retain-and-Forget Objective

Let $f(x)$ denote the normalized image representation and t_y the normalized text representation of class y. The class logits are

$$\ell_y(x) = \tau\, f(x)^\top t_y, \tag{1}$$

where τ is CLIP's learned logit scale.

For retained domains, we use standard cross-entropy:

$$\mathcal{L}_{\text{memorize}} = \frac{1}{|\mathcal{B}_{\text{mem}}|} \sum_{(x,y,d)\in\mathcal{B}_{\text{mem}}} \text{CE}(\ell(x), y). \tag{2}$$

AI-Generated

For forgotten domains, we maximize predictive entropy, which discourages confident class assignments:

$$\mathcal{L}_{\text{forget}} = \frac{1}{|\mathcal{B}_{\text{forget}}|} \sum_{(x,y,d)\in\mathcal{B}_{\text{forget}}} \mathcal{H}\big(\text{softmax}(\ell(x))\big). \tag{3}$$

Because training minimizes the total objective, ADU subtracts $\mathcal{L}_{\text{forget}}$ so that entropy is maximized on forgotten domains.

3.3 Domain Disentangling Loss

Naive optimization of $\mathcal{L}_{\text{memorize}} - \mathcal{L}_{\text{forget}}$ often leaves domain information entangled. In that case, the model can still rely on shared cross-domain structure, making it hard to forget one domain without collateral damage to another. ADU addresses this using an explicit domain head $g(\cdot)$ operating on the image representation.

The first part of DDL is a domain-classification objective:

$$\mathcal{L}_{\text{dom-ce}} = \frac{1}{|\mathcal{B}|} \sum_{(x,y,d)\in\mathcal{B}} \text{CE}(g(f(x)), d). \tag{4}$$

This forces the learned adaptation to preserve domain-discriminative structure instead of collapsing it.

The second part maximizes pairwise maximum mean discrepancy between domain-specific groups in the domain-logit space. Let $z_i = g(f(x_i))$ and let $\mathcal{B}_m$ denote samples from domain d_m. For each pair of distinct domains (d_m, d_n), we compute

$$\text{MMD}(\mathcal{B}_m, \mathcal{B}_n) = \left\| \frac{1}{|\mathcal{B}_m|} \sum_{x\in\mathcal{B}_m} \phi(z(x)) - \frac{1}{|\mathcal{B}_n|} \sum_{x\in\mathcal{B}_n} \phi(z(x)) \right\|^2, \tag{5}$$

with a Gaussian kernel [Gretton et al., 2012]. In the implementation, the kernel bandwidth is set from the median pairwise distance between domains. Aggregating across all domain pairs gives

$$\mathcal{L}_{\text{mmd}} = \frac{1}{|\mathcal{P}|} \sum_{(m,n)\in\mathcal{P}} \text{MMD}(\mathcal{B}_m, \mathcal{B}_n). \tag{6}$$

The full disentangling loss is

$$\mathcal{L}_{\text{DDL}} = \gamma\, \mathcal{L}_{\text{dom-ce}} - \lambda\, \mathcal{L}_{\text{mmd}}, \tag{7}$$

where γ controls how strongly domain identity is supervised and λ controls how strongly different domains are pushed apart. The negative sign reflects that MMD is maximized, not minimized.

3.4 Instance-wise Prompt Generator

Prompt learning methods commonly use a fixed set of visual prompt tokens for all images [Zhou et al., 2022b, Khattak et al., 2023]. For domain unlearning, that is restrictive because domain evidence is often instance-specific: some images express strong domain style, while others lie near the boundary between domains.

ADU therefore augments deep visual prompting with an *Instance-wise Prompt Generator* (InstaPG). At a chosen transformer depth, the current visual prompt tokens act as queries while image patch tokens act as keys and values in a cross-attention block:

$$P' = \text{CrossAttn}(P, X_{\text{patch}}), \tag{8}$$

where P is the set of learnable vision prompt tokens and X_{patch} are the patch embeddings from the current image. The updated prompts P' are then inserted into subsequent transformer layers. Since this operation is performed per image, the prompt becomes conditioned on instance-specific domain cues rather than being shared across the entire batch.

Figure 2 illustrates the mechanism. In the released implementation, cross-attention is inserted into the deep vision prompt pathway, using patch tokens rather than only the class token, and the adapted prompt tokens are learned jointly with the text prompts and domain classifier.

AI-Generated

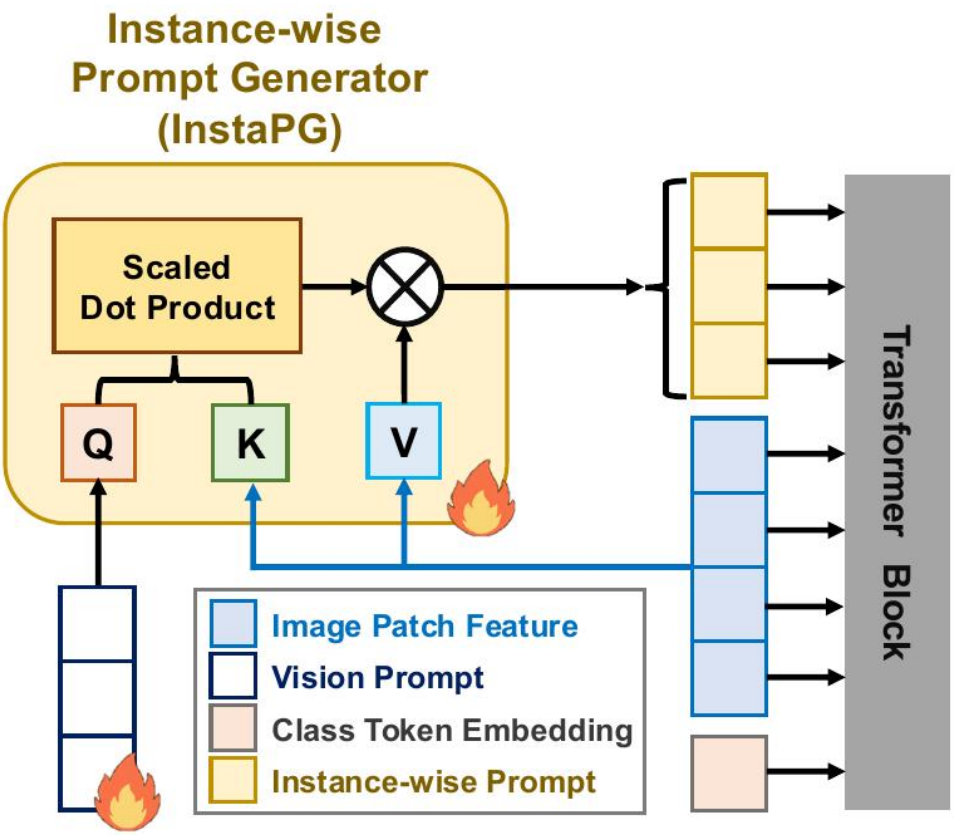

Figure 2: Instance-wise Prompt Generator (InstaPG). Vision prompt tokens are updated by cross-attending to image patch features, allowing prompt adaptation to depend on image-specific domain evidence.

3.5 Overall Objective

The total training objective is

$$\mathcal{L} = \mathcal{L}_{\text{memorize}} - \mathcal{L}_{\text{forget}} + \mathcal{L}_{\text{DDL}}. \tag{9}$$

This objective encodes the desired behavior directly: preserve retained-domain class predictions, erase confident predictions on forgotten domains, and increase the separability of domain structure so forgetting can be applied more selectively.

4 Experiments

4.1 Experimental Setup

We use CLIP ViT-B/16 [Radford et al., 2021, Dosovitskiy et al., 2021] with deep prompting in both visual and textual branches. The released training configuration uses 8 visual prompt tokens, 8 text prompt tokens, and prompt depth 9, with SGD for 50 epochs. Only prompt parameters, cross-attention parameters, and the domain classifier are updated; the CLIP backbone remains frozen. Unless otherwise stated, the few-shot protocol uses a fixed number of labeled examples per $(\text{class}, \text{domain})$ pair, and the training script averages results over three random seeds.

We evaluate on:

- **ImageNet**: a two-domain setup composed of ImageNet real images [Deng et al., 2009] and ImageNet-Sketch [Wang et al., 2019], so only $|\mathcal{D}_{\text{forget}}| = 1$ is applicable.

Table 1: **Comparison with Baseline CLIP Fine-tuning Methods.** The average performance of all possible combinations of the domains to be forgotten/retained are reported for various number of domains to be forgotten $|\mathcal{D}_{\text{forget}}| \in \{1, 2, 3\}$. ImageNet has only two domains, so only the case $|\mathcal{D}_{\text{forget}}| = 1$ is tested. Performance is evaluated using the three metrics: (i) *Mem*: the accuracy of the classes for data from memorized domains, (ii) *For*: the error of the classes for data from forgotten domains, and (iii) H: the harmonic mean of *Mem* and *For*. Higher values mean better performance. The *Baseline* in the table refers to the method that trains the vision prompt using $\mathcal{L}_{\text{memorize}}$ and $\mathcal{L}_{\text{forget}}$ in Sec. 3.2, representing a straightforward and conventional approach to unlearning.

$\lvert\mathcal{D}_{\text{forget}}\rvert$	Method	ImageNet			Office-Home			Mini DomainNet		
		$H\uparrow$	*Mem*$\uparrow$	*For*$\uparrow$	$H\uparrow$	*Mem*$\uparrow$	*For*$\uparrow$	$H\uparrow$	*Mem*$\uparrow$	*For*$\uparrow$
$\lvert\mathcal{D}_{\text{forget}}\rvert = 1$	LP++ [Huang et al., 2024a]	50.69	62.22	42.76	30.46	**85.06**	18.55	31.73	84.72	19.52
	CLIPFit [Li et al., 2024]	71.31	63.04	82.13	43.44	83.20	29.40	53.56	84.32	39.24
	BBF [Kuwana et al., 2024]	45.56	35.92	65.91	31.25	80.94	19.74	32.12	81.80	20.03
	Baseline	74.66	61.23	96.43	52.59	79.96	39.88	62.07	**85.15**	49.40
	Ours	**77.02**	**64.13**	**96.73**	**69.96**	77.93	**64.34**	**75.56**	78.32	**73.06**
$\lvert\mathcal{D}_{\text{forget}}\rvert = 2$	LP++ [Huang et al., 2024a]	×	×	×	31.11	**85.54**	19.01	32.21	**85.29**	19.85
	CLIPFit [Li et al., 2024]	×	×	×	40.53	83.64	26.74	51.35	84.74	36.83
	BBF [Kuwana et al., 2024]	×	×	×	32.54	80.42	20.54	47.95	61.48	40.52
	Baseline	×	×	×	54.19	80.23	41.23	61.97	84.71	48.96
	Ours	×	×	×	**73.58**	75.61	**71.89**	**77.03**	76.51	**77.66**
$\lvert\mathcal{D}_{\text{forget}}\rvert = 3$	LP++ [Huang et al., 2024a]	×	×	×	33.57	**86.22**	20.84	34.73	**85.87**	21.77
	CLIPFit [Li et al., 2024]	×	×	×	50.02	85.68	35.32	52.88	85.39	38.30
	BBF [Kuwana et al., 2024]	×	×	×	39.60	78.13	26.80	39.29	80.29	26.05
	Baseline	×	×	×	59.47	80.96	48.79	68.82	84.25	58.27
	Ours	×	×	×	**75.89**	72.15	**80.77**	**79.00**	75.00	**83.94**

- **Office-Home**: four domains (Art, Clipart, Product, Real World) with 65 classes [Venkateswara et al., 2017].
- **Mini DomainNet**: a four-domain subset (Clipart, Painting, Real, Sketch) of DomainNet [Peng et al., 2019, Zhou et al., 2021].

Following the provided evaluation protocol, we average across all possible choices of forgotten domains for each cardinality $|\mathcal{D}_{\text{forget}}| \in \{1, 2, 3\}$. We report three metrics. *Mem* is classification accuracy on retained domains. *For* is error rate on forgotten domains, so larger is better because it indicates stronger forgetting. To summarize the trade-off, we use the harmonic mean

$$H = \frac{2 \cdot \mathit{Mem} \cdot \mathit{For}}{\mathit{Mem} + \mathit{For}}. \tag{10}$$

We compare ADU with three strong CLIP adaptation baselines: LP++ [Huang et al., 2024a], CLIP-Fit [Li et al., 2024], and Black-Box Forgetting (BBF) [Kuwana et al., 2024]. We also compare against a direct prompt-learning baseline that uses only $\mathcal{L}_{\text{memorize}}$ and $\mathcal{L}_{\text{forget}}$.

4.2 Main Results

Table 1 reports the primary comparison. ADU improves the retained-forgotten balance on every dataset and every reported forgetting regime. On the two-domain ImageNet setting, ADU improves H from 74.66 to 77.02, while also improving retained-domain accuracy from 61.23 to 64.13 and forgotten-domain error from 96.43 to 96.73. On Office-Home, the gains are much larger: H improves from 52.59 to 69.96 when one domain is forgotten, from 54.19 to 73.58 when two domains are forgotten, and from 59.47 to 75.89 when three domains are forgotten. On Mini DomainNet, the corresponding gains are 62.07 to 75.56, 61.97 to 77.03, and 68.82 to 79.00.

The table also clarifies why domain unlearning is not solved by generic CLIP adaptation. LP++ and CLIPFit often maintain high retained-domain accuracy, but their forgotten-domain error remains substantially lower than ADU's. BBF is a stronger forgetting baseline than standard tuning, yet it still falls behind ADU in the overall trade-off. The direct prompt-learning baseline is competitive on *Mem*, but ADU is consistently better on *For*, which is precisely where explicit domain disentanglement should help.

AI-Generated

Table 2: **Domain Classification Accuracy when *Art* is Forgotten on Office-Home.**

Method	Domain Classification Accuracy [%]
Before Unlearning	25.80
Ours w/o DDL and InstaPG	31.06
Ours	79.43

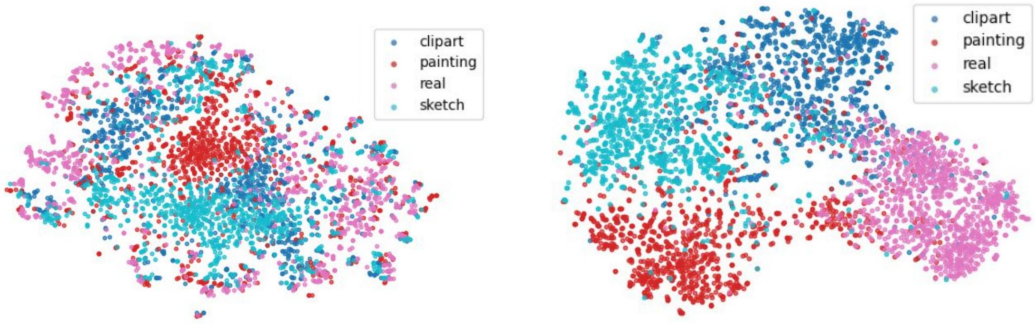

(a) Zero-shot CLIP. (b) ADU.

Figure 3: t-SNE visualization when the forgotten domain is *Real*. ADU produces substantially clearer domain clusters than zero-shot CLIP, indicating stronger domain separability after unlearning.

AI-Generated

5 Analysis

5.1 Does ADU Actually Disentangle Domains?

The central hypothesis of ADU is that better domain separation makes selective forgetting easier. Table 2 supports this directly. On Office-Home with Art forgotten, domain classification accuracy is only 25.80% before unlearning and rises to 31.06% when DDL and InstaPG are removed, but reaches 79.43% with the full method. This is a large increase in separability, not a marginal effect.

The t-SNE visualization in Figure 3 shows the same trend qualitatively for the setting in which Real is forgotten on Mini DomainNet. Zero-shot CLIP produces strongly overlapping domain clusters. ADU yields much clearer domain structure, with distinct groups for real, painting, sketch, and clipart. This visual evidence is consistent with the domain-classification results and explains why the forgetting objective can target specific domains more reliably after adaptation.

5.2 Ablation of DDL and InstaPG

Table 3 ablates DDL and InstaPG. Each component improves over the direct retain-and-forget baseline, but their combination is strongest. On Office-Home with one forgotten domain, the harmonic mean rises from 52.59 for the baseline to 56.41 with InstaPG alone, 60.82 with DDL alone, and 69.96 with both. The same pattern holds for two and three forgotten domains. This shows that disentanglement and instance-conditioned prompting are complementary: DDL gives the optimization a clearer domain geometry, while InstaPG makes the prompt response sensitive to image-specific domain cues.

Table 4 further breaks DDL into its two terms. Using either MMD or domain cross-entropy alone is helpful, but neither matches the full objective. For example, on Office-Home with one forgotten domain, using only MMD reaches $H = 68.62$ and using only cross-entropy reaches $H = 64.01$, while combining them reaches $H = 69.96$. The two terms therefore play different but compatible roles: cross-entropy builds a domain-predictive direction, and MMD pushes domains farther apart within that space.

Table 3: **Ablation Study.** The ablation results of Domain Disentangling Loss (DDL) and Instance-wise Prompt Generator (InstaPG) are reported. While our method achieves improvements with either DDL or InstaPG alone, combining both leads to even better balanced trade-off performance.

Dataset	DDL	InstaPG	$\lvert\mathcal{D}_{\text{forget}}\rvert = 1$			$\lvert\mathcal{D}_{\text{forget}}\rvert = 2$			$\lvert\mathcal{D}_{\text{forget}}\rvert = 3$		
			H ↑	*Mem*↑	*For*↑	*H* ↑	*Mem*↑	*For*↑	*H* ↑	*Mem*↑	*For*↑
Office-Home	-	-	52.59	79.96	39.88	54.19	80.23	41.23	59.47	80.96	48.79
	-	✓	56.41	**83.55**	44.05	61.01	**83.33**	48.60	70.60	**81.55**	63.28
	✓	-	60.82	74.51	51.72	60.01	76.22	49.94	63.12	77.74	54.57
	✓	✓	**69.96**	77.93	**64.34**	**73.58**	75.61	**71.89**	**75.89**	72.15	**80.77**
Mini DomainNet	-	-	62.07	85.15	49.40	61.97	84.71	48.96	68.82	**84.25**	58.27
	-	✓	64.06	**85.46**	51.64	65.92	**85.12**	53.96	74.17	83.68	66.68
	✓	-	74.23	78.00	70.87	75.28	77.57	73.20	77.60	77.42	77.90
	✓	✓	**75.56**	78.32	**73.06**	**77.03**	76.51	**77.66**	**81.78**	77.96	**86.12**

Table 4: **Ablation Studies of Loss Functions in Domain Disentangling Loss (DDL).** DDL employs two loss functions: Cross-Entropy (CE) and Maximum Mean Discrepancy (MMD). Using both losses together yields the best-balanced trade-off, as shown by H.

CE	MMD	$\lvert\mathcal{D}_{\text{forget}}\rvert = 1$			$\lvert\mathcal{D}_{\text{forget}}\rvert = 2$			$\lvert\mathcal{D}_{\text{forget}}\rvert = 3$		
		$H \uparrow$	$Mem \uparrow$	$For \uparrow$	$H \uparrow$	$Mem \uparrow$	$For \uparrow$	$H \uparrow$	$Mem \uparrow$	$For \uparrow$
-	-	56.41	**83.55**	44.05	61.01	**83.33**	48.60	70.60	81.55	63.28
-	✓	68.62	82.41	59.47	72.21	81.01	65.66	66.76	**82.38**	57.12
✓	-	64.01	82.97	53.62	69.33	80.73	61.24	71.53	81.43	64.55
✓	✓	**69.96**	77.93	**64.34**	**73.58**	75.61	**71.89**	**75.89**	72.15	**80.77**

5.3 Attention Behavior

Figure 4 compares attention maps across domains. On retained domains such as Painting, Clipart, and Sketch, ADU continues to focus on the main object. On the forgotten Real domain, its attention becomes more diffuse and less object-centric than zero-shot CLIP. This is the desired directional behavior: the model preserves salient evidence where it should remember, and it weakens confident object-focused evidence where it should forget.

5.4 Sensitivity to the Number of Shots

Figure 5 studies the number of labeled training samples per domain. ADU consistently outperforms the direct baseline from 1 to 16 shots on all three datasets. On ImageNet and Office-Home, both methods improve as more shots are provided, but ADU maintains a persistent gap. On Mini DomainNet, the advantage is larger: ADU stays around the high-70s in H while the baseline remains in the low-to-mid 60s. These trends indicate that ADU is not dependent on a narrow data regime.

5.5 Sensitivity to DDL Weights

Figure 6 varies the two DDL weights. Increasing γ, the coefficient on domain cross-entropy, yields a strong improvement from roughly 50 to around 70 in H, after which performance plateaus. Varying λ, the MMD coefficient, shows a peak near $\lambda = 10$ and a gradual decline for larger values. These curves match the intended use of DDL: too little domain supervision fails to disentangle domains, while too much discrepancy maximization begins to hurt the retain-forget balance.

This sensitivity trend also helps explain the shot study. ADU's gains are not confined to the lowest-data regime, but they are especially meaningful there because class supervision alone is weakest. When only a few labeled examples are available per domain, DDL provides an auxiliary training signal that organizes samples by domain even before class decision boundaries are well refined, while InstaPG can still react to local style evidence in each image. The persistent gap at higher shot

AI-Generated

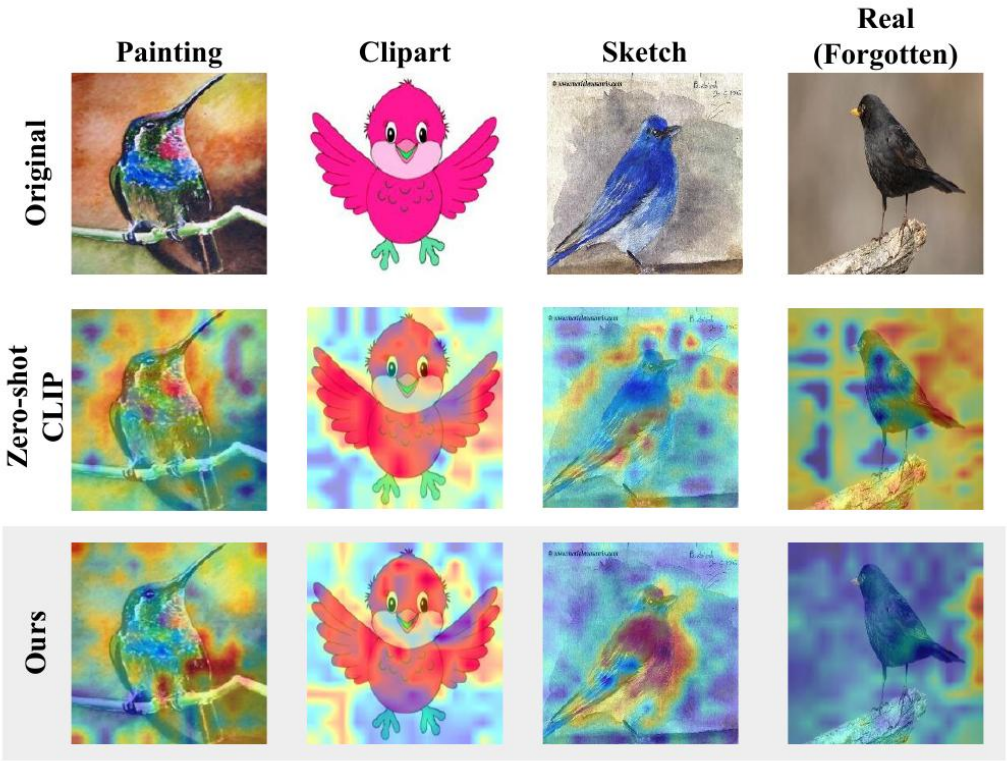

Figure 4: Attention map visualization. ADU keeps object-focused attention on retained domains but becomes less object-centric on the forgotten real-domain example, matching the intended forgetting behavior.

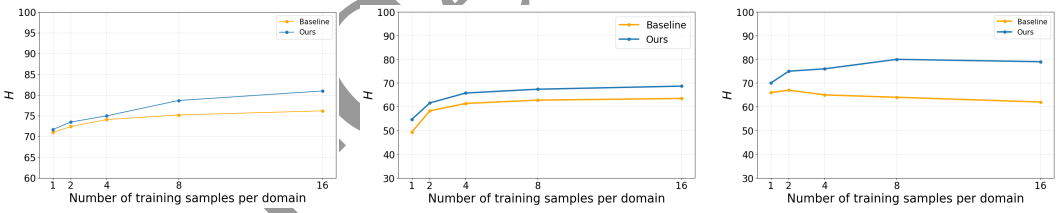

(a) ImageNet. (b) Office-Home. (c) Mini DomainNet.

Figure 5: Sensitivity to the number of training samples per domain. ADU consistently outperforms the retain-and-forget baseline across shot counts.

counts indicates that ADU is improving the retain-forget trade-off itself rather than only regularizing small-sample training.

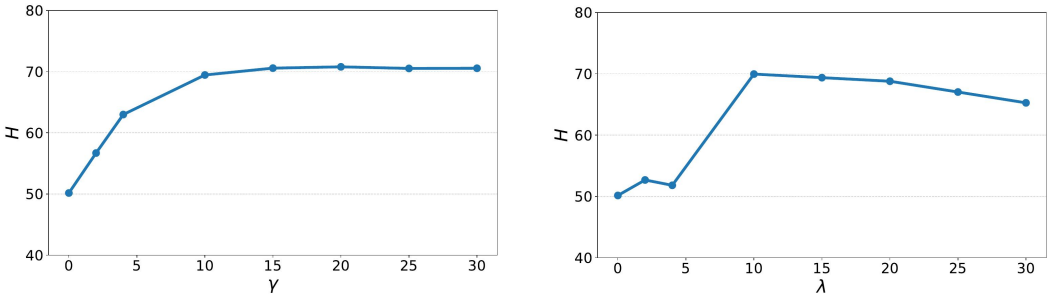

(a) γ.

(b) λ.

Figure 6: Impact of DDL weights. Increasing the domain-classification weight is important up to a moderate-to-large range, while the MMD weight has a clearer optimum around the middle of the sweep.

6 Conclusion

We presented ADU, a method for approximate domain unlearning in vision-language models. The key idea is that selective forgetting requires explicit control over domain information, not only a retain-versus-forget classification loss. ADU achieves this with DDL, which makes domains more separable, and InstaPG, which adapts deep visual prompts to the domain evidence of each image. Across ImageNet, Office-Home, and Mini DomainNet, ADU improves the harmonic mean between retained-domain accuracy and forgotten-domain error over strong CLIP adaptation baselines, and the accompanying analyses show that these gains are tied to clearer domain separation and more selective attention patterns. These results suggest that domain-level forgetting is a practical and distinct adaptation problem for VLMs, and that prompt-based domain disentanglement is an effective way to address it.

AI-Generated

References

Yinzhi Cao and Junfeng Yang. Towards making systems forget with machine unlearning. In *Proceedings of the IEEE Symposium on Security and Privacy (SP)*, 2015.

Junhyeong Cho, Gilhyun Nam, Sungyeon Kim, Hunmin Yang, and Suha Kwak. Promptstyler: Prompt-driven style generation for source-free domain generalization. In *Proceedings of the IEEE/CVF International Conference on Computer Vision (ICCV)*, 2023.

Jia Deng, Wei Dong, Richard Socher, Li-Jia Li, Kai Li, and Li Fei-Fei. Imagenet: A large-scale hierarchical image database. In *Proceedings of the IEEE Conference on Computer Vision and Pattern Recognition (CVPR)*, 2009.

Alexey Dosovitskiy, Lucas Beyer, Alexander Kolesnikov, Dirk Weissenborn, Xiaohua Zhai, Thomas Unterthiner, Mostafa Dehghani, Matthias Minderer, Georg Heigold, Sylvain Gelly, et al. An image is worth 16x16 words: Transformers for image recognition at scale. In *Proceedings of the International Conference on Learning Representations (ICLR)*, 2021.

Chongyu Fan, Jiancheng Liu, Yihua Zhang, Eric Wong, Dennis Wei, and Sijia Liu. Salun: Empowering machine unlearning via gradient-based weight saliency in both image classification and generation. In *Proceedings of the International Conference on Learning Representations (ICLR)*, 2024.

Antonio Ginart, Melody Guan, Gregory Valiant, and James Y Zou. Making ai forget you: Data deletion in machine learning. In *Proceedings of the Advances in Neural Information Processing Systems (NeurIPS)*, 2019.

Laura Graves, Vineel Nagisetty, and Vijay Ganesh. Amnesiac machine learning. In *Proceedings of the AAAI Conference on Artificial Intelligence (AAAI)*, 2021.

Arthur Gretton, Karsten M Borgwardt, Malte J Rasch, Bernhard Schölkopf, and Alexander Smola. A kernel two-sample test. *Journal of Machine Learning Research (JMLR)*, 13(1):723–773, 2012.

Chuan Guo, Tom Goldstein, Awni Hannun, and Laurens Van Der Maaten. Certified data removal from machine learning models. *arXiv preprint arXiv:1911.03030*, 2019.

Yunshi Huang, Fereshteh Shakeri, Jose Dolz, Malik Boudiaf, Houda Bahig, and Ismail Ben Ayed. Lp++: A surprisingly strong linear probe for few-shot clip. In *Proceedings of the IEEE/CVF Conference on Computer Vision and Pattern Recognition (CVPR)*, 2024a.

Zhehao Huang, Xinwen Cheng, JingHao Zheng, Haoran Wang, Zhengbao He, Tao Li, and Xiaolin Huang. Unified gradient-based machine unlearning with remain geometry enhancement. In *Proceedings of the Advances in Neural Information Processing Systems (NeurIPS)*, 2024b.

Muhammad Uzair Khattak, Hanoona Rasheed, Muhammad Maaz, Salman Khan, and Fahad Shahbaz Khan. Maple: Multi-modal prompt learning. In *Proceedings of the IEEE/CVF Conference on Computer Vision and Pattern Recognition (CVPR)*, 2023.

Yusuke Kuwana, Yuta Goto, Takashi Shibata, and Go Irie. Black-box forgetting. In *Proceedings of the Advances in Neural Information Processing Systems (NeurIPS)*, 2024.

Ming Li, Jike Zhong, Chenxin Li, Liuzhuozheng Li, Nie Lin, and Masashi Sugiyama. Vision-language model fine-tuning via simple parameter-efficient modification. In *Proceedings of the Conference on Empirical Methods in Natural Language Processing (EMNLP)*, 2024.

Mingsheng Long, Yue Cao, Jianmin Wang, and Michael Jordan. Learning transferable features with deep adaptation networks. In *Proceedings of the International Conference on Machine Learning (ICML)*, 2015.

Seth Neel, Aaron Roth, and Saeed Sharifi-Malvajerdi. Descent-to-delete: Gradient-based methods for machine unlearning. In *Proceedings of the 31st International Conference on Algorithmic Learning Theory (ALT)*, 2021.

Vishal M Patel, Raghuraman Gopalan, Ruonan Li, and Rama Chellappa. Visual domain adaptation: A survey of recent advances. *IEEE Signal Processing Magazine*, 32(3):53–69, 2015.

Xingchao Peng, Qinxun Bai, Xide Xia, Zijun Huang, Kate Saenko, and Bo Wang. Moment matching for multi-source domain adaptation. In *Proceedings of the IEEE/CVF International Conference on Computer Vision (ICCV)*, 2019.

Alec Radford, Jong Wook Kim, Chris Hallacy, Aditya Ramesh, Gabriel Goh, Sandhini Agarwal, Girish Sastry, Amanda Askell, Pamela Mishkin, Jack Clark, et al. Learning transferable visual models from natural language supervision. In *Proceedings of the International Conference on Machine Learning (ICML)*, 2021.

Ayush Sekhari, Jayadev Acharya, Gautam Kamath, and Ananda Theertha Suresh. Remember what you want to forget: Algorithms for machine unlearning. In *Proceedings of the Advances in Neural Information Processing Systems (NeurIPS)*, 2021.

Ting Shu, Shalini Mo, Arjun Ramaswamy, Xinlei Zhao, Devi Parikh, and Marcus Rohrbach. Test-time prompt tuning for zero-shot generalization in vision-language models. In *Proceedings of the Advances in Neural Information Processing Systems (NeurIPS)*, 2022.

Mainak Singha, Harsh Pal, Ankit Jha, and Biplab Banerjee. Ad-clip: Adapting domains in prompt space using clip. In *Proceedings of the IEEE/CVF International Conference on Computer Vision Workshop (ICCVW)*, 2023.

Enayat Ullah, Tung Mai, Anup Rao, Ryan A Rossi, and Raman Arora. Machine unlearning via algorithmic stability. In *Proceedings of the Conference on Learning Theory (CoLT)*, 2021.

Hemanth Venkateswara, Jose Eusebio, Shayok Chakraborty, and Sethuraman Panchanathan. Deep hashing network for unsupervised domain adaptation. In *Proceedings of the IEEE Conference on Computer Vision and Pattern Recognition (CVPR)*, 2017.

AI-Generated

Haohan Wang, Songwei Ge, Zachary Lipton, and Eric P Xing. Learning robust global representations by penalizing local predictive power. In *Proceedings of the Advances in Neural Information Processing Systems (NeurIPS)*, 2019.

Liyuan Wang, Yan Jin, Zhen Chen, Jinlin Wu, Mengke Li, Yang Lu, and Hanzi Wang. Transitive vision-language prompt learning for domain generalization. *arXiv preprint arXiv:2404.18758*, 2024.

Jie Xu, Zihan Wu, Cong Wang, and Xiaohua Jia. Machine unlearning: Solutions and challenges. *IEEE Transactions on Emerging Topics in Computational Intelligence*, 2024.

Xi Yu, Shinjae Yoo, and Yuewei Lin. CLIPCEIL: Domain generalization through clip via channel refinement and image-text alignment. In *Proceedings of the Advances in Neural Information Processing Systems (NeurIPS)*, 2024.

Kaiyang Zhou, Yongxin Yang, Yu Qiao, and Tao Xiang. Domain adaptive ensemble learning. *IEEE Transactions on Image Processing (TIP)*, 30:8008–8018, 2021.

Kaiyang Zhou, Ziwei Liu, Yu Qiao, Tao Xiang, and Chen Change Loy. Domain generalization: A survey. *IEEE Transactions on Pattern Analysis and Machine Intelligence (PAMI)*, 45(4):4396–4415, 2022a.

Kaiyang Zhou, Jingkang Yang, Chen Change Loy, and Ziwei Liu. Learning to prompt for vision-language models. In *Proceedings of the International Conference on Computer Vision (ICCV)*, 2022b.

AI-Generated