Prompt-guided Disentangled Representation for Action Recognition

Author One **Author Two** **Author Three**

Abstract

Multi-label action recognition in untrimmed videos remains challenging because multiple actions co-occur and share overlapping spatial regions and temporal intervals, producing entangled feature representations that hinder per-action discrimination. We propose **ProDA** (**Pro**mpt-guided **D**isentangled representation for **A**ction recognition), a framework that decomposes entangled action features on spatio-temporal scene graphs (SSGs) through prompt-guided disentanglement. ProDA introduces three key components: (1) a Dynamic Prompt Module (DPM) that generates action-specific and action-universal prompts to steer a shared transformer encoder toward per-action and shared contextual representations, (2) a Video Graph Parsing Neural Network (VGPNN) that performs message passing over the SSG with temporal self-attention and learnable edge gating, and (3) Video Graph Normalization (VGNorm) that maintains globally synchronized statistics for graph features across distributed training. An Action Disentanglement (AD) loss further decorrelates the per-action and shared feature channels while enforcing reconstruction fidelity. On the Charades dataset, ProDA achieves 71.1 mAP, outperforming the previous best graph-based method OR2G+NL (67.5 mAP) by 3.6 points. On the SportsHHI human-human interaction benchmark, ProDA improves baseline mAP from 10.69 to 13.55 (+2.86) and Recall@50 from 68.13 to 72.69.

1 Introduction

Understanding human actions in video is a fundamental problem in computer vision with applications spanning surveillance, autonomous driving, and sports analytics. While single-label action classification in short, trimmed clips has seen remarkable progress [5, 11, 12], real-world videos are inherently *multi-label*: a person may simultaneously be "talking on a phone" and "sitting on a sofa" while another person "walks through a doorway." Recognizing all co-occurring actions demands representations that can capture both the shared scene context and the individual characteristics of each action.

A natural way to structure the spatial layout of a video is through a *Spatio-Temporal Scene Graph* (SSG) [17], which encodes actors and objects as nodes, their pairwise relations as edges, and their evolution over time. Prior SSG-based approaches [32, 40] have shown strong results by reasoning over such graphs, yet they treat all actions through a single, entangled representation. When multiple actions share actors or objects, their features inevitably interfere, degrading recognition accuracy.

Representation disentanglement has been studied extensively in generative models [25, 7] and graph learning [26, 20], where the goal is to separate latent factors of variation. Meanwhile, prompt learning [18, 47, 35] has emerged as an efficient mechanism to adapt large pretrained models to downstream tasks by injecting learnable tokens. In this work, we bring these two ideas together: we use *action-conditioned prompts* to guide a shared graph transformer into producing disentangled, per-action representations.

39th Conference on Neural Information Processing Systems (NeurIPS 2025).

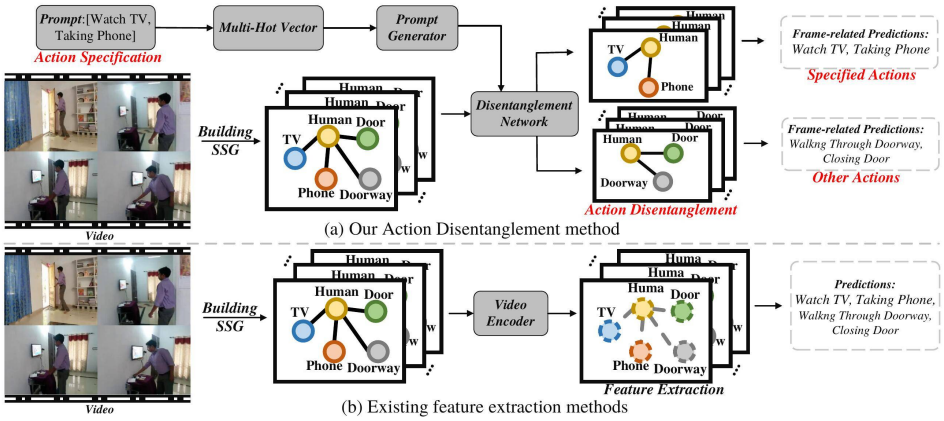

Figure 1: Comparison of existing SSG-based methods with ProDA. Prior work passes all actions through a shared encoder, producing entangled features. ProDA uses prompt-guided disentanglement to separate per-action features while retaining shared context.

We introduce **ProDA**, a framework comprising three novel components. First, the *Dynamic Prompt Module* (DPM) generates two types of prompts: *Specific Action Prompts* (SAPs) conditioned on individual action labels, and *Universal Action Prompts* (UAPs) that capture shared context. These prompts modulate a transformer encoder so that the same architecture produces action-specific and context features. Second, the *Video Graph Parsing Neural Network* (VGPNN) performs message passing on the SSG with temporal self-attention layers and learnable edge gating, enabling the model to reason about how object relations evolve over time. Third, *Video Graph Normalization* (VGNorm) maintains a globally synchronized running mean across distributed workers, providing stable normalization for graph-structured features of varying sizes.

We further propose an *Action Disentanglement* (AD) loss that combines a margin-based decorrelation term with a reconstruction constraint, ensuring that the disentangled features remain both separable and informative.

Extensive experiments demonstrate the effectiveness of ProDA. On the Charades dataset [36], ProDA achieves 71.1 mAP using a CLIP-B/16 backbone with SSG annotations, surpassing OR2G+NL [32] (67.5 mAP) and LaIAR+NL [40] (67.4 mAP). On the SportsHHI benchmark [43], ProDA improves baseline mAP from 10.69 to 13.55 and Recall@50 from 68.13 to 72.69.

2 Related Work

Video Action Recognition. Early video understanding methods used hand-crafted features [39] before deep two-stream architectures [37, 10] demonstrated the value of learning appearance and motion jointly. 3D convolutional networks [38, 5, 44] extended spatial convolutions to the temporal domain. SlowFast networks [12] introduced dual-pathway processing at different temporal resolutions. More recently, video transformers [1, 3, 24, 22] have achieved strong results by applying self-attention across space and time, and vision-language pretraining [35] has enabled methods like VicTR [19] to leverage text-conditioned representations.

Scene Graphs for Action Understanding. Scene graphs provide a structured representation of objects and their relationships in an image or video. The Action Genome dataset [17] introduced spatio-temporal scene graphs for compositional action understanding. OR2G [32] proposed object-relation reasoning on such graphs, while LaIAR [40] incorporated language models for interpretable reasoning. STTran [6] applied spatial-temporal transformers for dynamic scene graph generation. Wang *et al.* [41] modeled videos as space-time region graphs, and the Graph Parsing Neural Network (GPNN) [34] introduced learnable message passing for human-object interaction recognition. Our VGPNN extends GPNN with temporal self-attention and a novel normalization scheme tailored to video graph structures.

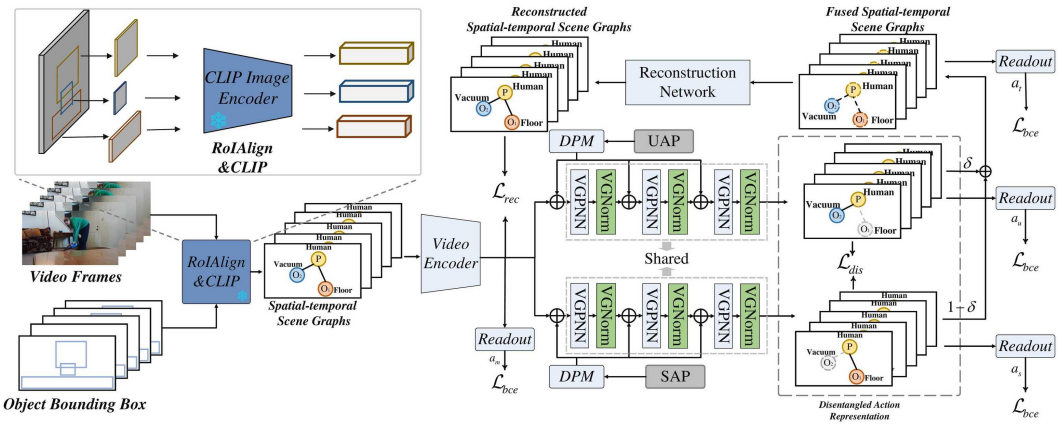

Figure 2: Overview of the ProDA framework. Given an input video, a spatio-temporal scene graph (SSG) is constructed from detected actors and objects. The Dynamic Prompt Module (DPM) generates Specific Action Prompts (SAP) and Universal Action Prompts (UAP) that guide shared transformer encoders to produce disentangled per-action and shared context features. The Video Graph Parsing Neural Network (VGPNN) refines node features through message passing with temporal self-attention and VGNorm. A gate fusion module merges the two feature streams for final classification, while the AD loss enforces decorrelation and reconstruction fidelity during training.

Graph Neural Networks. Graph neural networks (GNNs) have been applied to various vision tasks including skeleton-based action recognition [30]. Disentangled GNNs [26] decompose node features into independent components, and factorizable GCNs [45] factor graph convolutions for efficiency. DiGCL [20] and IDGCL [21] introduced disentangled contrastive learning on graphs, while recent work [31] addressed disentangled multiplex graph representations. GraphNorm [4] proposed principled normalization for graph training. Our VGNorm differs by maintaining a globally synchronized mean across distributed workers and computing per-sample variance, which is better suited to the heterogeneous node counts in video scene graphs.

Prompt Learning. Visual Prompt Tuning (VPT) [18] demonstrated that learnable prompt tokens can efficiently adapt large pretrained vision models. CoCoOp [47] introduced conditional prompt learning for vision-language models. DePT [46] proposed decoupled prompt tuning, and GPPT [9] extended prompts to graph neural networks. HetGPT [28] applied prompt tuning to heterogeneous GNNs. Our DPM differs from prior prompt methods by generating *content-dependent* prompts that are conditioned on both the input features and an action label vector, enabling fine-grained per-action adaptation of a shared transformer.

Representation Disentanglement. Disentangling factors of variation in learned representations has been studied in both image [25] and video [7, 14] domains. S3VAE [48] proposed self-supervised sequential disentanglement, and DFDNet [13] introduced disentangling and filtering dynamics for video prediction. In human-centric analysis, disentangled pretraining has been applied to HOI detection [23] and motion retargeting [27]. Wang *et al.* [42] provide a comprehensive survey of disentangled representation learning. Our approach is distinct in that we achieve disentanglement through prompt-guided decomposition on graph-structured video features rather than through generative latent variable models.

3 Methodology

3.1 Problem Formulation

Given a video V with T frames, we aim to recognize all actions occurring in the video from a label set $\mathcal{A} = \{a_1, a_2, \ldots, a_C\}$ of C action categories. Each video is associated with a multi-label binary vector $\mathbf{y} \in \{0,1\}^C$ where $y_c = 1$ if action a_c is present. We additionally have access to a spatio-temporal scene graph $\mathcal{G} = (\mathcal{V}, \mathcal{E})$ where nodes $\mathcal{V}$ represent detected actors and objects across frames, and edges $\mathcal{E}$ encode spatial relationships between them.

For each actor node (human), we extract an ROI-pooled feature $\mathbf{h} \in \mathbb{R}^{D_v}$ from a video backbone. For each object node, we similarly extract $\mathbf{o}_i \in \mathbb{R}^{D_v}$, $i = 1, \ldots, N$, where N is the number of objects. Edge features $\mathbf{e}_i \in \mathbb{R}^{D_v}$ encode the spatial configuration between the actor and each object.

3.2 Spatio-Temporal Scene Graph Construction

Following prior work [17, 32], we construct the SSG from ground-truth or detected bounding boxes. For each frame t, we identify actors and objects and establish edges based on spatial proximity. The SSG spans F sampled frames, yielding node features of shape $B \times F \times N \times D$ where B is the batch size. Actor features are extracted via temporal and spatial pooling from a pretrained backbone (e.g., CLIP-ViT-B/16 [35, 8]) followed by per-entity linear projections:

$$\mathbf{p}_1 = W_{p_1} \cdot \text{Pool}(\mathbf{x}_{p_1}), \quad \mathbf{p}_2 = W_{p_2} \cdot \text{Pool}(\mathbf{x}_{p_2}), \quad \mathbf{v}_r = W_v \cdot \text{Pool}(\mathbf{x}_u), \tag{1}$$

where $\mathbf{x}_{p_1}, \mathbf{x}_{p_2}$ are the ROI features of the two interacting persons and $\mathbf{x}_u$ is the union-box feature. A spatial encoding is computed from the bounding box geometry via a small convolutional network that maps two-channel spatial masks to a compact vector $\mathbf{s} \in \mathbb{R}^{256}$. The concatenated interaction feature is:

$$\mathbf{x}_{\text{in}} = [\mathbf{p}_1; \mathbf{p}_2; \mathbf{v}_r; \mathbf{s}] \in \mathbb{R}^D, \tag{2}$$

where $D = 3 \times 512 + 256 = 1792$ for the spatial-aware configuration.

3.3 Dynamic Prompt Module (DPM)

The key innovation of ProDA is the DPM, which injects action-aware information into a shared transformer encoder to produce disentangled representations. Let $\mathbf{t} \in \{0, 1\}^C$ denote the action label vector for a given sample (ground truth during training; predicted during inference).

Prompt Generation. The DPM generates prompts through a two-stage process. First, a linear projection maps the label vector to a bank of K prompt tokens:

$$\mathbf{P} = W_{\text{tok}}(\mathbf{t}) \in \mathbb{R}^{K \times D}, \quad K = 10, \tag{3}$$

and a parallel projection produces a conditioning token $\mathbf{q} = W_q(\mathbf{t}) \in \mathbb{R}^D$. This conditioning token is added to the input feature and normalized:

$$\hat{\mathbf{x}} = \text{LayerNorm}(\mathbf{q} + \mathbf{x}). \tag{4}$$

A gating network computes K attention weights over the prompt bank:

$$\boldsymbol{\alpha} = \sigma(W_g \hat{\mathbf{x}}) \in \mathbb{R}^K, \tag{5}$$

where σ is the sigmoid function. The final prompt is the weighted combination:

$$\mathbf{p} = \boldsymbol{\alpha}^\top \mathbf{P} \in \mathbb{R}^D. \tag{6}$$

The prompted input is then $\mathbf{x}' = \mathbf{x} + \mathbf{p}$.

Specific Action Prompt (SAP) and Universal Action Prompt (UAP). The DPM maintains two independent prompt generators. The SAP generator receives the action label vector $\mathbf{t}$ and produces prompts conditioned on the specific actions present, guiding the transformer toward per-action features. The UAP generator receives the complementary vector $\bar{\mathbf{t}} = \mathbf{1} - \mathbf{t}$ (cast to float), steering the transformer toward shared contextual features that capture the general scene. Each prompt generator has its own set of parameters $(W_{\text{tok}}, W_q, W_g)$, enabling independent specialization.

3.4 Video Graph Parsing Neural Network (VGPNN)

The VGPNN operates on the SSG to refine node representations through iterative message passing with temporal reasoning. Each VGPNN cell consists of three stages: edge computation, temporal self-attention, and node update.

Edge Computation. For each actor-object pair, bidirectional edge features are computed:

$$\tilde{\mathbf{e}} = f_{\text{edge}}([\mathbf{h}; \mathbf{e}; \mathbf{o}] \oplus [\mathbf{o}; \mathbf{e}; \mathbf{h}]), \tag{7}$$

where $[\cdot; \cdot; \cdot]$ denotes concatenation along the feature dimension, $\oplus$ denotes concatenation along the node dimension, and f_{edge} is a two-layer MLP with LayerNorm and GELU activation. This produces $2N$ edge vectors per frame.

Temporal Self-Attention. The edge features are reshaped from $(B, F, 2N, D)$ to $(B \cdot 2N, F, D)$ and passed through a multi-layer transformer encoder with 12 attention heads:

$$\tilde{\mathbf{e}}' = \text{TransformerEncoder}(\tilde{\mathbf{e}}), \tag{8}$$

which enables each edge to attend to its temporal neighbors across frames, capturing how spatial relationships evolve.

Learnable Edge Gating. A gating function $g : \mathbb{R}^D \to [0, 1]$ computes per-edge importance weights:

$$w = \sigma(W_l \tilde{\mathbf{e}}'), \tag{9}$$

where W_l is a linear layer followed by sigmoid activation. These weights modulate the message vectors.

Node Update. Messages are computed as $\mathbf{m} = f_{\text{msg}}([\mathbf{n}; \tilde{\mathbf{e}}'])$ where $\mathbf{n}$ denotes the concatenated node features. After a merging MLP, the edge-weighted messages are aggregated:

$$\mathbf{h}' = \text{VGNorm}\Big(\text{MsgNorm}(\mathbf{h}, \textstyle\sum_i w_i \mathbf{m}_i^{(h)}) + \mathbf{h}\Big), \tag{10}$$

where MsgNorm is a learnable scaling of the residual connection. Object nodes are updated analogously.

3.5 Video Graph Normalization (VGNorm)

Standard normalization schemes are suboptimal for graph-structured video features. BatchNorm conflates statistics across heterogeneous graphs; LayerNorm ignores the global distribution; GraphNorm [4] does not account for temporal structure. We propose VGNorm, which maintains a globally synchronized running mean $\boldsymbol{\mu}_g$ across all distributed workers and computes per-sample variance.

Given input $\mathbf{x} \in \mathbb{R}^{B \times F \times N \times D}$, VGNorm first computes the batch mean $\bar{\mathbf{x}} = \frac{1}{|\mathcal{B}|} \sum_b \text{mean}_d(\mathbf{x}_b)$ and synchronizes it across workers via all-reduce. During training, the global running mean is updated with momentum β:

$$\boldsymbol{\mu}_g \leftarrow (1 - \beta)\boldsymbol{\mu}_g + \beta \bar{\mathbf{x}}. \tag{11}$$

The output is then:

$$\hat{\mathbf{x}} = \frac{\mathbf{x} - s \cdot \boldsymbol{\mu}_g}{\sqrt{\text{Var}_d(\mathbf{x} - s \cdot \boldsymbol{\mu}_g) + \epsilon}} \cdot \gamma + \boldsymbol{\beta}, \tag{12}$$

where s is a learnable scale for the mean subtraction, γ and $\boldsymbol{\beta}$ are affine parameters, and Var_d denotes per-sample variance along the feature dimension. At test time, the frozen running mean $\boldsymbol{\mu}_g$ is used directly.

3.6 Action Disentanglement (AD) Loss

The AD loss consists of two terms that jointly enforce disentanglement.

Decorrelation Loss $\mathcal{L}_{dis}$. Given the SAP-guided feature $\mathbf{z}_s$ and UAP-guided feature $\mathbf{z}_u$ (each zero-centered), we penalize their correlation beyond a margin m:

$$\mathcal{L}_{dis} = \text{ReLU}\left(\frac{|\langle \bar{\mathbf{z}}_s, \bar{\mathbf{z}}_u \rangle|}{\sigma_s \sigma_u} - m\right), \tag{13}$$

where $\bar{\mathbf{z}} = \mathbf{z} - \mathbb{E}[\mathbf{z}]$, σ denotes the root-mean-square, and $m = 0.4$ is a tolerance margin that allows mild correlation while preventing collapse.

Reconstruction Loss $\mathcal{L}_{res}$. A reconstruction network R (a 3-layer MLP) maps the fused output back to the original input space. The loss applies a margin to prevent the model from trivially memorizing:

$$\mathcal{L}_{res} = \text{ReLU}\big(\|\mathbf{x}_{\text{in}} - R(\mathbf{x}_{\text{out}})\|_2^2 - \tau\big), \tag{14}$$

where $\tau = 0.3$ is the reconstruction tolerance.

Total Loss. The full training objective is:

$$\mathcal{L} = \mathcal{L}_{cls} + \lambda_c \mathcal{L}_{com} + \lambda_p \mathcal{L}_{pri} + \mathcal{L}_{res} + \mathcal{L}_{dis}, \tag{15}$$

where $\mathcal{L}_{cls}$ is the focal binary cross-entropy for the main action classifier, $\mathcal{L}_{com}$ and $\mathcal{L}_{pri}$ are auxiliary classification losses on the UAP and SAP branches respectively, and $\lambda_c = 1.0, \lambda_p = 0.1$ weight the auxiliary terms.

Gate Fusion. At inference, the SAP and UAP features are merged through a learned gate:

$$\mathbf{x}_{\text{out}} = \alpha \cdot \mathbf{z}_s + (1 - \alpha) \cdot \mathbf{z}_u, \quad \alpha = \sigma(W_f[\mathbf{z}_s; \mathbf{z}_u]), \tag{16}$$

where W_f is a two-layer gating network with GELU activation that outputs per-dimension blending weights.

4 Experiments

4.1 Datasets

Charades. Charades [36] is a large-scale multi-label activity recognition dataset containing 9,848 videos of daily indoor activities. Each video is annotated with multiple action labels from 157 categories, with an average of 6.8 actions per video. We use the standard train/validation split and report mean Average Precision (mAP) on the validation set. Scene graph annotations from Action Genome [17] provide per-frame bounding boxes and relationship labels.

SportsHHI. SportsHHI [43] is a recently proposed dataset for human-human interaction detection in sports videos. It contains 34 interaction categories across diverse sports. We evaluate with mAP and Recall@K metrics at different IoU thresholds.

4.2 Implementation Details

For the Charades experiments, we use a CLIP-ViT-B/16 [35] backbone pretrained on the CLIP objective. The VGPNN uses 768-dimensional features with 12-head attention in the temporal self-attention module. We set the DPM prompt bank size to $K = 10$ tokens. The interaction features are 1792-dimensional (three 512-dim projections plus 256-dim spatial encoding). Training uses focal loss with $\alpha = 1, \gamma = 0$, the Adam optimizer with learning rate 5×10^{-5}, and batch size 16 across 4 GPUs. VGNorm uses momentum $\beta = 0.1$.

For SportsHHI, we build ProDA on top of the SportsHHI baseline architecture [43], adding the DPM and AD loss modules while keeping the backbone (SlowFast-R101 [12]) unchanged. The model uses 123.19M parameters, comparable to the baseline at 123.11M (our reimplementation).

4.3 Main Results

Results on Charades. Table 1 presents the main comparison on the Charades validation set. Among RGB-only methods, VicTR(L/14) [19] with CLIP pretraining achieves 57.6 mAP, while prior SSG-based methods with K400 pretraining reach 44.9 (OR2G+NL) and 45.1 (LaIAR+NL). When SSG annotations are available, ProDA achieves **71.1 mAP** using CLIP-B/16, outperforming OR2G+NL (67.5) by 3.6 points and LaIAR+NL (67.4) by 3.7 points. This demonstrates that prompt-guided disentanglement effectively leverages scene graph structure for multi-label action recognition.

Results on SportsHHI. Table 2 shows human-human interaction classification results on SportsHHI. ProDA achieves 13.55 mAP, improving the SportsHHI baseline (10.69) by 2.86 points. Notably, ProDA consistently improves across all recall thresholds: R@150 from 89.25 to 92.54 (+3.29), R@100 from 82.93 to 87.91 (+4.98), R@50 from 68.13 to 72.69 (+4.56), and R@20 from 43.72 to 47.81 (+4.09). The consistent improvement across metrics confirms that the disentanglement strategy generalizes beyond multi-label recognition to pairwise interaction detection.

4.4 Ablation Studies

We conduct ablation studies on the Charades dataset to analyze the contribution of each component. We report both a_t mAP (threshold-based) and a_m mAP (macro-averaged).

Table 1: Multi-label action recognition performance comparison on the Charades's validation set in term of mAP. SSG:ground truth SSG. Bbox: bounding box from ground truth SSG.

model	pretrain	Modality	mAP	model	pretrain	Modality	mAP
SGFB+NL [17]	K400	RGB	44.3	SGFB+NL [17]	K400	RGB+SSG	60.3
I3D+NL [5]	K400	RGB	37.5	LaIAR [40]	K400	RGB+Bbox	63.6
OR2G+NL [32]	K400	RGB	44.9	OR2G [32]	K400	RGB+SSG	63.3
LaIAR+NL [40]	K400	RGB	45.1	LaIAR+NL [40]	K400	RGB+Bbox	67.4
VicTR(B/16) [19]	CLIP	RGB	50.1	OR2G+NL [32]	K400	RGB+SSG	67.5
VicTR(L/14) [19]	CLIP	RGB	57.6	**Ours(B/16)**	**CLIP**	**RGB+SSG**	**71.1**

Table 2: Human-Human Interaction Classification results in SportsHHI. SportsHHI* is our reimplementation based on the official SportsHHI code, with minor modifications (e.g., parameter size) to match the capacity of ProDA for fair comparison.

method	mAP	R@150	R@100	R@50	R@20	Params
STTran [6]	3.31	71.29	62.91	42.67	22.14	-
HORT [16]	3.75	78.57	67.78	50.33	26.96	-
SlowFast [12]	5.00	81.66	74.00	52.74	26.82	-
ACARN [33]	5.44	82.85	75.22	56.53	31.77	-
SportHHI [43] (baseline)	10.69	89.25	82.93	68.13	43.72	111.18M
SportsHHI* (reimpletmented)	10.16 (↓0.53)	90.07 (↑0.82)	84.83 (↑1.9)	68.40 (↑0.37)	40.16 (↓ 3.56)	123.11M
Ours (baseline+ProDA)	**13.55 (↑2.86)**	**92.54 (↑3.29)**	**87.91 (↑4.98)**	**72.69 (↑4.56)**	**47.81 (↑4.09)**	123.19M

Table 3: Ablation of prompt

prompt type	a_tmAP (%)	a_mmAP (%)
SimplePrompt	68.07	57.80
DPM	**71.10**	**59.04**

Table 4: Ablation of normalization

norm type	a_tmAP (%)	a_mmAP (%)
LayerNorm [2]	68.12	57.96
BatchNorm [15]	65.39	58.20
GraphNorm [4]	68.61	58.32
VGNorm	**71.10**	**59.04**

Table 5: Ablation study of loss function on Charades dataset. ❻ denotes the baseline training only the video encoder without ProDA; ❶ denotes using ProDA with only the action classification loss.

	$\mathcal{L}_{res}$ w/o margin	$\mathcal{L}_{res}$	$\mathcal{L}_{dis}$ w/o margin	$\mathcal{L}_{dis}$	a_t mAP on Charades (%)	a_m mAP on Charades (%)
❶	-	-	-	-	67.45	57.38
❷	✓	-	✓	-	68.43	8.03
❸	-	-	-	✓	67.78	58.28
❹	-	✓	-	-	64.89	57.90
❺	-	✓	-	✓	**71.10**	**59.04**
❻	-	-	-	-	-	58.01

Effect of DPM. Table 3 compares the DPM against a simple fixed prompt. Replacing DPM with a simple learnable prompt token (SimplePrompt) reduces a_t mAP from 71.10 to 68.07, a drop of 3.03 points. This confirms that the content-dependent prompt generation through the gated bank mechanism is essential for effective disentanglement.

Effect of VGNorm. Table 4 compares VGNorm against standard normalization schemes. VGNorm (71.10 mAP) substantially outperforms LayerNorm [2] (68.12), GraphNorm [4] (68.61), and BatchNorm [15] (65.39). The advantage over GraphNorm (2.49 mAP) suggests that the globally synchronized running mean and per-sample variance of VGNorm are better suited to the heterogeneous graph sizes in video scene graphs.

Effect of AD Loss Components. Table 5 ablates the loss terms. The baseline (❶) using only the action classification loss achieves 67.45 mAP. Adding the decorrelation loss $\mathcal{L}_{dis}$ with margin (❸) yields 67.78, while adding the reconstruction loss $\mathcal{L}_{res}$ with margin alone (❹) gives 64.89. Combining both $\mathcal{L}_{res}$ and $\mathcal{L}_{dis}$ with margins (❺) achieves the best result of 71.10 mAP. Notably, removing the margins (❷) causes a_m mAP to collapse to 8.03, demonstrating that the margin mechanism is critical for training stability.

5 Analysis

5.1 Specific Action Prompt Evaluation

To evaluate whether the SAP module successfully learns per-action representations, we design two evaluation protocols. Given a video with ground-truth actions $\mathcal{A}^+$, we construct an SAP for each

Table 6: Non-distractor-injected SAP. label nums indicates the length of the ground-truth label set for each video

label nums	a_s mAP	label nums	a_s mAP
1	100.00 ±0.0	9	99.80 ±0.3
2	100.00 ±0.0	10	99.45 ±0.6
3	100.00 ±0.0	11	99.62 ±0.4
4	99.66 ±0.4	12	99.10 ±1.0
5	99.80 ±0.2	13	99.56 ±0.6
6	99.82 ±0.3	14	98.98 ±1.1
7	99.98 ±0.0	15	99.19 ±1.2
8	99.88 ±0.1	16	99.80 ±0.4

Table 7: Distractor-injected SAP. label nums indicates the length of the ground-truth label set for each video

label nums	a_s mAP	label nums	a_s mAP
1	100.0 ±0.0	9	85.63 ±6.6
2	90.52 ±3.5	10	85.87 ±6.7
3	92.61 ±1.1	11	86.56 ±5.0
4	93.16 ±0.7	12	84.85 ±6.5
5	87.17 ±4.8	13	87.42 ±6.4
6	87.69 ±2.9	14	87.73 ±6.0
7	86.65 ±6.1	15	88.58 ±6.0
8	86.32 ±6.1	16	92.10 ±4.9

Table 8: Distractor-injected SAP

		IoU threshold 0.2	0.5	0.7	**Avg.**
θ	0.2	77.97	43.68	26.08	49.24
	0.5	64.25	33.70	20.78	39.57
	0.7	53.80	22.98	12.99	29.92
	Avg.	65.34	33.45	19.95	-

Table 9: Non-distractor-injected SAP

		IoU threshold 0.2	0.5	0.7	**Avg.**
θ	0.2	85.56	57.44	40.18	61.06
	0.5	74.44	43.43	27.75	48.53
	0.7	59.27	24.26	13.14	32.23
	Avg.	73.09	41.71	27.03	-

individual action $a \in \mathcal{A}^+$ and measure whether the resulting representation activates the correct action.

Non-distractor SAP (Table 6). We evaluate the SAP by constructing prompts from only the correct actions. Table 6 shows that a_s mAP remains above 98.98% for all label set sizes (1 to 16), with perfect 100% for sizes 1–3. This confirms that the DPM successfully generates prompts that isolate individual action information, even when many actions co-occur.

Distractor-injected SAP (Table 7). We further test robustness by padding the action label vector with randomly sampled distractor actions not present in the video. Table 7 shows that a_s mAP drops to 84–93% depending on label set size, with the lowest performance (84.85%) at 12 labels. This degradation is expected since the distractor actions inject noise into the prompt, yet the model still maintains reasonable discrimination, indicating that the DPM learns to focus on action-relevant features even under noisy prompts.

5.2 Temporal Localization Analysis

Beyond action classification, we evaluate ProDA's temporal localization ability by measuring frame-level Average Precision at different confidence thresholds θ and IoU thresholds.

Non-distractor setting (Table 9). At $\theta = 0.2$, the frame-level AP averages 61.06 across IoU thresholds (0.2, 0.5, 0.7), with 85.56 at IoU=0.2 and 40.18 at IoU=0.7. As expected, performance decreases with stricter thresholds on both axes.

Distractor-injected setting (Table 8). Injecting distractors reduces the average AP from 61.06 to 49.24 at $\theta = 0.2$, a relative drop of about 19%. The degradation is more pronounced at high IoU (40.18 $\rightarrow$ 26.08 at IoU=0.7), suggesting that distractor prompts primarily affect precise boundary localization.

5.3 t-SNE Visualization

Figure 3 visualizes the SAP-guided features using t-SNE [29]. The features form clearly separated clusters by action category, confirming that the prompt-guided disentanglement produces discriminative per-action representations. Actions with similar semantics (e.g., "sitting" and "lying down") show closer cluster positions while remaining separable, suggesting that the feature space preserves meaningful semantic structure.

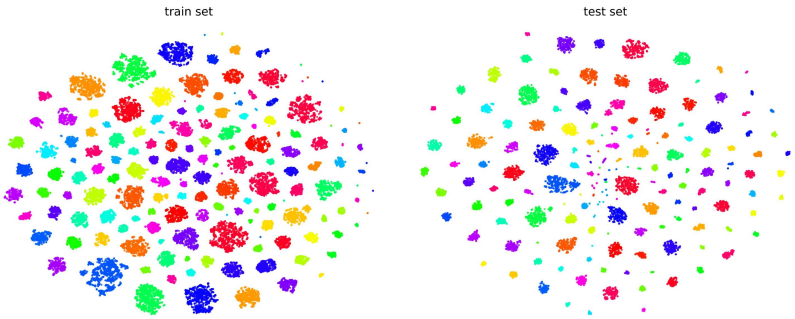

(a) (b)

Figure 3: t-SNE [29] visualization of features from the SAP branch. Each color represents a different action category. The SAP-guided features form well-separated clusters, indicating successful disentanglement of per-action representations.

Figure 4: Visualization of frame-level edge gating weights from the VGPNN. Top row: weights for SAP-guided features. Bottom row: weights for UAP-guided features. The SAP branch focuses on action-relevant temporal segments while the UAP branch provides broader temporal coverage.

5.4 Frame-level Weight Visualization

Figure 4 shows the temporal distribution of edge gating weights from the VGPNN for both the SAP and UAP branches. The SAP branch produces peaked weight distributions that concentrate on the temporal intervals where the prompted action occurs, effectively performing soft temporal localization. In contrast, the UAP branch distributes weights more uniformly across frames, capturing the global scene context. This complementary behavior validates the design intuition behind the dual-prompt architecture: the SAP branch specializes in action-specific temporal reasoning while the UAP branch maintains holistic scene understanding. The gate fusion module then dynamically balances these two perspectives for each sample.

6 Conclusion

We presented ProDA, a prompt-guided framework for disentangled action representation learning on spatio-temporal scene graphs. The Dynamic Prompt Module generates action-specific and universal prompts that steer shared transformer encoders toward disentangled features without requiring separate network branches for each action. The Video Graph Parsing Neural Network extends graph message passing with temporal self-attention and learnable edge gating for effective spatio-temporal reasoning, while Video Graph Normalization provides stable normalization for heterogeneous graph-structured video features. The Action Disentanglement loss, with its margin-based decorrelation and reconstruction terms, ensures that the disentangled features remain both separable and informative. Experiments on Charades and SportsHHI demonstrate consistent improvements over prior methods, and our analysis confirms that the DPM successfully isolates per-action information even in the presence of distractor actions. Future work may explore extending ProDA to open-vocabulary action recognition and reducing dependence on scene graph annotations through self-supervised graph construction.

References

[1] Anurag Arnab, Mostafa Dehghani, Georg Heigold, Chen Sun, Mario Lučić, and Cordelia Schmid. Vivit: A video vision transformer. In *Proceedings of the IEEE/CVF international conference on computer vision*, pages 6836–6846, 2021.

[2] Jimmy Lei Ba, Jamie Ryan Kiros, and Geoffrey E Hinton. Layer normalization. *arXiv preprint arXiv:1607.06450*, 2016.

[3] Gedas Bertasius, Heng Wang, and Lorenzo Torresani. Is space-time attention all you need for video understanding? In *ICML*, volume 2, page 4, 2021.

[4] Tianle Cai, Shengjie Luo, Keyulu Xu, Di He, Tie-yan Liu, and Liwei Wang. Graphnorm: A principled approach to accelerating graph neural network training. In *International Conference on Machine Learning*, pages 1204–1215. PMLR, 2021.

[5] Joao Carreira and Andrew Zisserman. Quo vadis, action recognition? a new model and the kinetics dataset. In *proceedings of the IEEE Conference on Computer Vision and Pattern Recognition*, pages 6299–6308, 2017.

[6] Y. Cong, W. Liao, H. Ackermann, et al. Spatial-temporal transformer for dynamic scene graph generation. In *Proceedings of the IEEE/CVF International Conference on Computer Vision*, pages 16372–16382, 2021.

[7] Emily L Denton et al. Unsupervised learning of disentangled representations from video. *Advances in neural information processing systems*, 30, 2017.

[8] Alexey Dosovitskiy, Lucas Beyer, Alexander Kolesnikov, Dirk Weissenborn, Xiaohua Zhai, Thomas Unterthiner, Mostafa Dehghani, Matthias Minderer, Georg Heigold, Sylvain Gelly, et al. An image is worth 16x16 words: Transformers for image recognition at scale. *arXiv preprint arXiv:2010.11929*, 2020.

[9] Taoran Fang, Yunchao Zhang, Yang Yang, Chunping Wang, and Lei Chen. Universal prompt tuning for graph neural networks. *Advances in Neural Information Processing Systems*, 36: 52464–52489, 2023.

[10] Christoph Feichtenhofer, Axel Pinz, and Andrew Zisserman. Convolutional two-stream network fusion for video action recognition. In *Proceedings of the IEEE conference on computer vision and pattern recognition*, pages 1933–1941, 2016.

[11] Christoph Feichtenhofer, Axel Pinz, and Richard P Wildes. Spatiotemporal multiplier networks for video action recognition. In *Proceedings of the IEEE conference on computer vision and pattern recognition*, pages 4768–4777, 2017.

[12] Christoph Feichtenhofer, Haoqi Fan, Jitendra Malik, et al. Slowfast networks for video recognition. In *Proceedings of the IEEE/CVF International Conference on Computer Vision*, pages 6202–6211, 2019.

[13] Lianqiang Gan, Junyu Lai, Jingze Ju, Lianli Gao, and Yi Bin. Dfdnet: Disentangling and filtering dynamics for enhanced video prediction. In *Proceedings of the AAAI Conference on Artificial Intelligence*, volume 39, pages 3059–3067, 2025.

[14] Jun-Ting Hsieh, Bingbin Liu, De-An Huang, Li F Fei-Fei, and Juan Carlos Niebles. Learning to decompose and disentangle representations for video prediction. *Advances in neural information processing systems*, 31, 2018.

[15] Sergey Ioffe and Christian Szegedy. Batch normalization: Accelerating deep network training by reducing internal covariate shift. In *International conference on machine learning*, pages 448–456. pmlr, 2015.

[16] Ji Ji, Rishabh Desai, and Juan Carlos Niebles. Detecting human-object relationships in videos. In *Proceedings of the IEEE/CVF International Conference on Computer Vision*, pages 8106–8116, 2021.

[17] Jingwei Ji, Ranjay Krishna, Li Fei-Fei, and Juan Carlos Niebles. Action genome: Actions as compositions of spatio-temporal scene graphs. In *Proceedings of the IEEE/CVF conference on computer vision and pattern recognition*, pages 10236–10247, 2020.

[18] Menglin Jia, Luming Tang, Bor-Chun Chen, Claire Cardie, Serge Belongie, Bharath Hariharan, and Ser-Nam Lim. Visual prompt tuning. In *European conference on computer vision*, pages 709–727. Springer, 2022.

[19] Kumara Kahatapitiya, Anurag Arnab, Arsha Nagrani, and Michael S Ryoo. Victr: Video-conditioned text representations for activity recognition. In *Proceedings of the IEEE/CVF Conference on Computer Vision and Pattern Recognition*, pages 18547–18558, 2024.

[20] Haoyang Li, Xin Wang, Ziwei Zhang, Zehuan Yuan, Hang Li, and Wenwu Zhu. Disentangled contrastive learning on graphs. *Advances in Neural Information Processing Systems*, 34: 21872–21884, 2021.

[21] Haoyang Li, Ziwei Zhang, Xin Wang, and Wenwu Zhu. Disentangled graph contrastive learning with independence promotion. *IEEE Transactions on Knowledge and Data Engineering*, 35(8): 7856–7869, 2022.

[22] Yanghao Li, Chao-Yuan Wu, Haoqi Fan, Karttikeya Mangalam, Bo Xiong, Jitendra Malik, and Christoph Feichtenhofer. Mvitv2: Improved multiscale vision transformers for classification and detection. In *Proceedings of the IEEE/CVF conference on computer vision and pattern recognition*, pages 4804–4814, 2022.

[23] Zhuolong Li, Xingao Li, Changxing Ding, and Xiangmin Xu. Disentangled pre-training for human-object interaction detection. In *Proceedings of the IEEE/CVF conference on computer vision and pattern recognition*, pages 28191–28201, 2024.

[24] Ze Liu, Jia Ning, Yue Cao, Yixuan Wei, Zheng Zhang, Stephen Lin, and Han Hu. Video swin transformer. In *Proceedings of the IEEE/CVF conference on computer vision and pattern recognition*, pages 3202–3211, 2022.

[25] Francesco Locatello, Stefan Bauer, Mario Lucic, Gunnar Raetsch, Sylvain Gelly, Bernhard Schölkopf, and Olivier Bachem. Challenging common assumptions in the unsupervised learning of disentangled representations. In *international conference on machine learning*, pages 4114–4124. PMLR, 2019.

[26] Jianxin Ma, Peng Cui, Kun Kuang, Xin Wang, and Wenwu Zhu. Disentangled graph convolutional networks. In *International conference on machine learning*, pages 4212–4221. PMLR, 2019.

[27] Jingzhe Ma and Shiqi Yu. Human identity-preserved motion retargeting in video synthesis by feature disentanglement. *arXiv preprint arXiv:2204.06862*, 2022.

[28] Yihong Ma, Ning Yan, Jiayu Li, Masood Mortazavi, and Nitesh V Chawla. Hetgpt: Harnessing the power of prompt tuning in pre-trained heterogeneous graph neural networks. In *Proceedings of the ACM Web Conference 2024*, pages 1015–1023, 2024.

[29] Laurens van der Maaten and Geoffrey Hinton. Visualizing data using t-sne. *Journal of machine learning research*, 9(Nov):2579–2605, 2008.

[30] Joanna Materzynska, Tete Xiao, Roei Herzig, Huijuan Xu, Xiaolong Wang, and Trevor Darrell. Something-else: Compositional action recognition with spatial-temporal interaction networks. In *Proceedings of the IEEE/CVF conference on computer vision and pattern recognition*, pages 1049–1059, 2020.

[31] Yujie Mo, Yajie Lei, Jialie Shen, Xiaoshuang Shi, Heng Tao Shen, and Xiaofeng Zhu. Disentangled multiplex graph representation learning. In *International conference on machine learning*, pages 24983–25005. PMLR, 2023.

[32] Yangjun Ou, Li Mi, and Zhenzhong Chen. Object-relation reasoning graph for action recognition. In *Proceedings of the IEEE/CVF Conference on Computer Vision and Pattern Recognition*, pages 20133–20142, 2022.

[33] Junting Pan, Siyu Chen, Mike Zheng Shou, et al. Actor-context-actor relation network for spatio-temporal action localization. In *Proceedings of the IEEE/CVF Conference on Computer Vision and Pattern Recognition*, pages 464–474, 2021.

[34] Siyuan Qi, Wenguan Wang, Baoxiong Jia, Jianbing Shen, and Song-Chun Zhu. Learning human-object interactions by graph parsing neural networks. In *Proceedings of the European conference on computer vision (ECCV)*, pages 401–417, 2018.

[35] Alec Radford, Jong Wook Kim, Chris Hallacy, Aditya Ramesh, Gabriel Goh, Sandhini Agarwal, Girish Sastry, Amanda Askell, Pamela Mishkin, Jack Clark, et al. Learning transferable visual models from natural language supervision. In *International conference on machine learning*, pages 8748–8763. PmLR, 2021.

[36] Gunnar A Sigurdsson, Gül Varol, Xiaolong Wang, Ali Farhadi, Ivan Laptev, and Abhinav Gupta. Hollywood in homes: Crowdsourcing data collection for activity understanding. In *Computer Vision–ECCV 2016: 14th European Conference, Amsterdam, The Netherlands, October 11–14, 2016, Proceedings, Part I 14*, pages 510–526. Springer, 2016.

[37] Karen Simonyan and Andrew Zisserman. Two-stream convolutional networks for action recognition in videos. *Advances in neural information processing systems*, 27, 2014.

[38] Du Tran, Lubomir Bourdev, Rob Fergus, Lorenzo Torresani, and Manohar Paluri. Learning spatiotemporal features with 3d convolutional networks. In *Proceedings of the IEEE international conference on computer vision*, pages 4489–4497, 2015.

[39] Heng Wang and Cordelia Schmid. Action recognition with improved trajectories. In *Proceedings of the IEEE international conference on computer vision*, pages 3551–3558, 2013.

[40] Ning Wang, Guangming Zhu, HS Li, Liang Zhang, Syed Afaq Ali Shah, and Mohammed Bennamoun. Language model guided interpretable video action reasoning. In *Proceedings of the IEEE/CVF Conference on Computer Vision and Pattern Recognition*, pages 18878–18887, 2024.

[41] Xiaolong Wang and Abhinav Gupta. Videos as space-time region graphs. In *Proceedings of the European conference on computer vision (ECCV)*, pages 399–417, 2018.

[42] Xin Wang, Hong Chen, Si'ao Tang, Zihao Wu, and Wenwu Zhu. Disentangled representation learning. *IEEE Transactions on Pattern Analysis and Machine Intelligence*, 2024.

[43] T. Wu, R. He, G. Wu, et al. Sportshhi: A dataset for human-human interaction detection in sports videos. In *Proceedings of the IEEE/CVF Conference on Computer Vision and Pattern Recognition*, pages 18537–18546, 2024.

[44] Saining Xie, Chen Sun, Jonathan Huang, Zhuowen Tu, and Kevin Murphy. Rethinking spatiotemporal feature learning: Speed-accuracy trade-offs in video classification. In *Proceedings of the European conference on computer vision (ECCV)*, pages 305–321, 2018.

[45] Yiding Yang, Zunlei Feng, Mingli Song, and Xinchao Wang. Factorizable graph convolutional networks. *Advances in Neural Information Processing Systems*, 33:20286–20296, 2020.

[46] Ji Zhang, Shihan Wu, Lianli Gao, Heng Tao Shen, and Jingkuan Song. Dept: Decoupled prompt tuning. In *Proceedings of the IEEE/CVF Conference on Computer Vision and Pattern Recognition*, pages 12924–12933, 2024.

[47] Kaiyang Zhou, Jingkang Yang, Chen Change Loy, and Ziwei Liu. Conditional prompt learning for vision-language models. In *Proceedings of the IEEE/CVF conference on computer vision and pattern recognition*, pages 16816–16825, 2022.

[48] Yizhe Zhu, Martin Renqiang Min, Asim Kadav, and Hans Peter Graf. S3vae: Self-supervised sequential vae for representation disentanglement and data generation. In *Proceedings of the IEEE/CVF Conference on Computer Vision and Pattern Recognition*, pages 6538–6547, 2020.