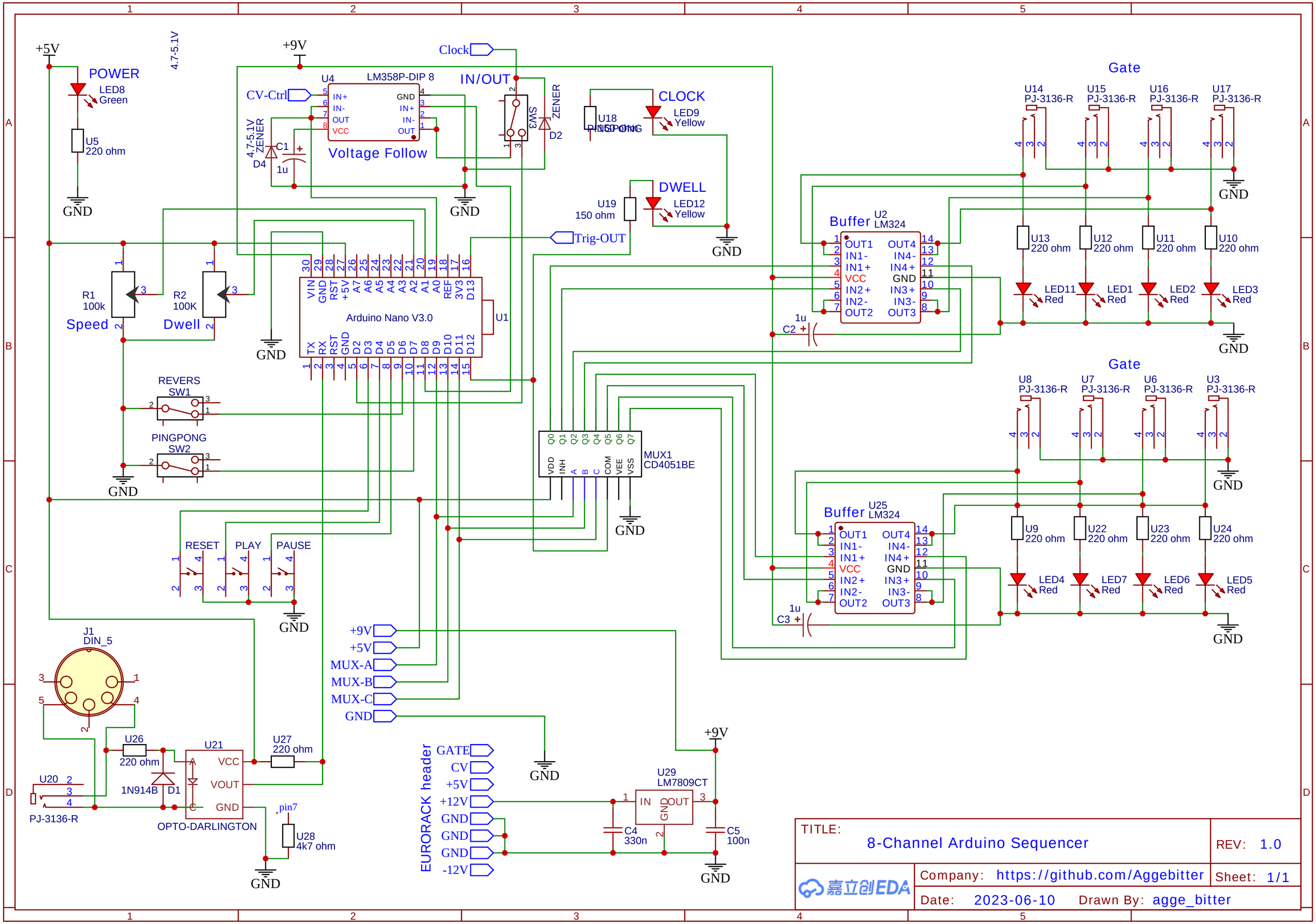
+5V
POWER
LED8
Green
U5
220 ohm
GND
4.7-5.1V
+9V
U4
LM358P-DIP 8
CV-Ctrl
IN+
IN-
OUT
VCC
GND
IN+
IN-
OUT
Voltage Follow
4.7-5.1V
ZENER
D4
C1
1u
Clock
IN/OUT
SW3
ZENER
D2
U18
150 ohm
CLOCK
LED9
Yellow
U19
150 ohm
DWELL
LED12
Yellow
Trig-OUT
R1
100k
Speed
R2
100K
Dwell
Arduino Nano V3.0
U1
VIN
GND
RST
+5V
A7
A6
A5
A4
A3
A2
A1
A0
REF
3V3
D13
TX
RX
RST
GND
D2
D3
D4
D5
D6
D7
D8
D9
D10
D11
D12
REVERS
SW1
PINGPONG
SW2
RESET
PLAY
PAUSE
MUX1
CD4051BE
Q0
Q1
Q2
Q3
Q4
Q5
Q6
Q7
VDD
INH
A
B
C
COM
VEE
VSS
Buffer
U2
LM324
OUT1
IN1-
IN1+
VCC
IN2+
IN2-
OUT2
OUT4
IN4-
IN4+
GND
IN3+
IN3-
OUT3
1u
C2
Gate
U14
PJ-3136-R
U15
PJ-3136-R
U16
PJ-3136-R
U17
PJ-3136-R
U13
220 ohm
U12
220 ohm
U11
220 ohm
U10
220 ohm
LED11
Red
LED1
Red
LED2
Red
LED3
Red
Buffer
U25
LM324
1u
C3
Gate
U8
PJ-3136-R
U7
PJ-3136-R
U6
PJ-3136-R
U3
PJ-3136-R
U9
220 ohm
U22
220 ohm
U23
220 ohm
U24
220 ohm
LED4
Red
LED7
Red
LED6
Red
LED5
Red
J1
DIN_5
U20
PJ-3136-R
U26
220 ohm
1N914B
D1
U21
VCC
VOUT
GND
OPTO-DARLINGTON
U27
220 ohm
pin7
U28
4k7 ohm
+9V
+5V
MUX-A
MUX-B
MUX-C
GND
EURORACK header
GATE
CV
+5V
+12V
GND
GND
GND
-12V
U29
LM7809CT
IN
OUT
GND
C4
330n
C5
100n
TITLE:
8-Channel Arduino Sequencer
REV: 1.0
Company: https://github.com/Aggebitter
Sheet: 1/1
Date: 2023-06-10
Drawn By: agge_bitter