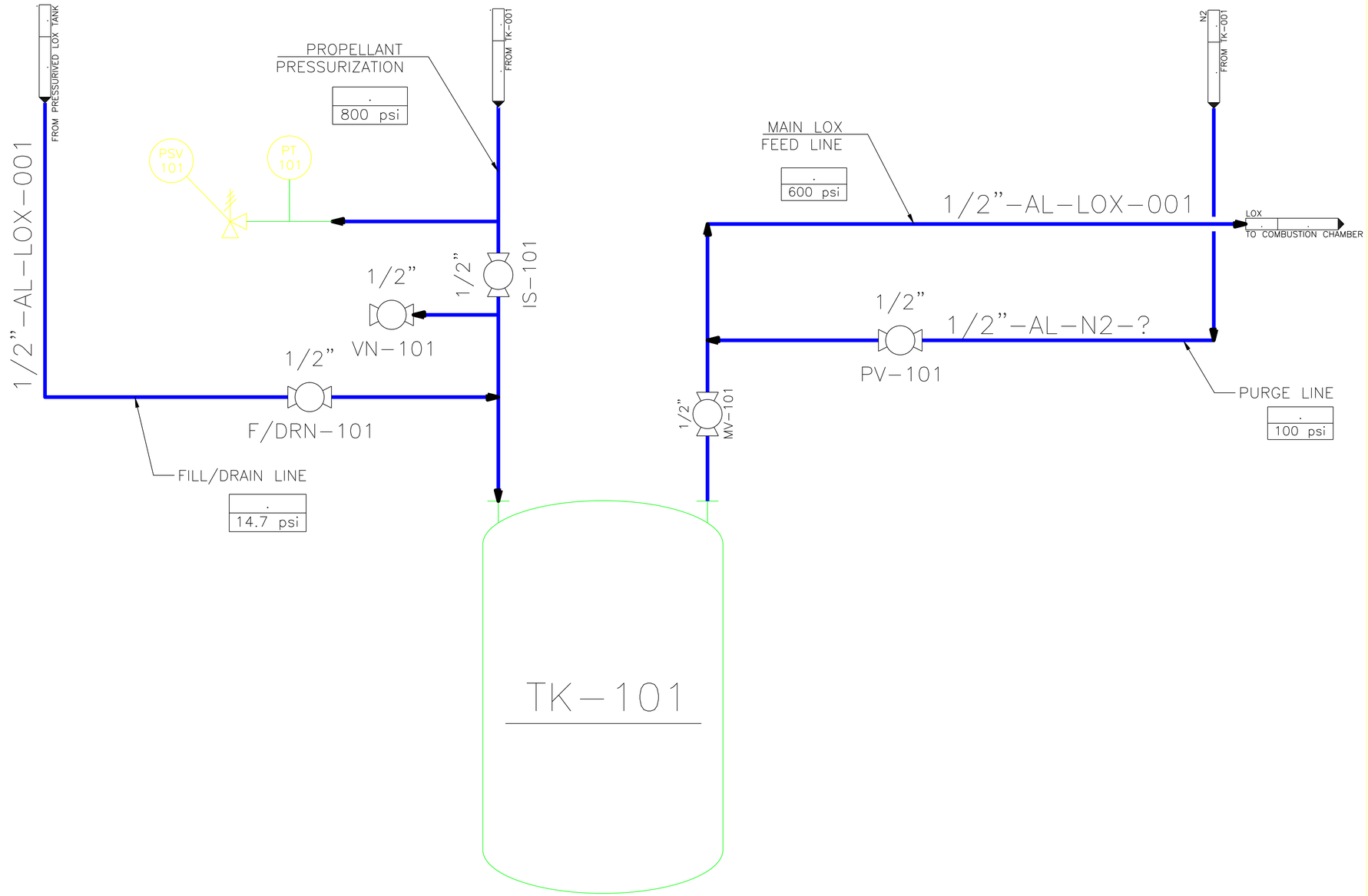

General Notes

No.	Revision/Issue	Date

Drawing Name
LOX Line
####

Project Name and Address
Project 6

Area
####

Drawing Number
####

Author
goose

Stamp

C:\Users\goose\AppData\Roaming\Autodesk\Autodesk AutoCAD Plant 3D 2023\R24.2\enu\DefaultProject\PID_DWG\LOX Line.dwg