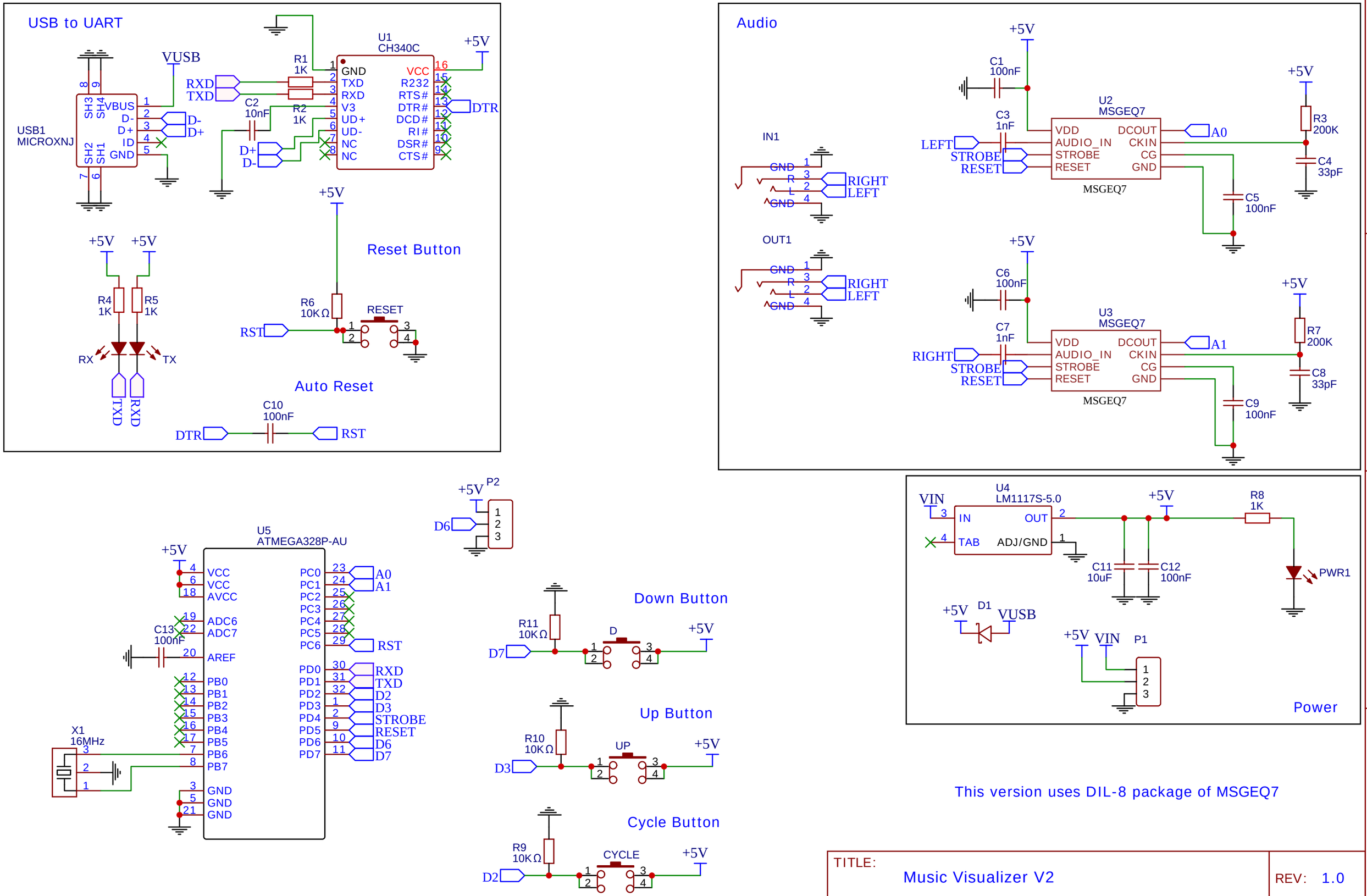
USB to UART
USB1
MICROXNJ
VUSB
RXD
TXD
D-
D+
R1
1K
R2
1K
C2
10nF
U1
CH340C
GND
TXD
RXD
V3
UD+
UD-
NC
NC
VCC
R232
RTS#
DTR#
DCD#
RI#
DSR#
CTS#
+5V
DTR
+5V
+5V
R4
1K
R5
1K
RX
TX
TXD
RXD
Reset Button
R6
10KΩ
RESET
RST
Auto Reset
C10
100nF
DTR
RST
Audio
IN1
GND
R
L
GND
RIGHT
LEFT
OUT1
GND
R
L
GND
RIGHT
LEFT
+5V
C1
100nF
C3
1nF
LEFT
STROBE
RESET
U2
MSGEQ7
VDD
AUDIO_IN
STROBE
RESET
DCOUT
CKIN
CG
GND
MSGEQ7
A0
R3
200K
C4
33pF
C5
100nF
+5V
C6
100nF
C7
1nF
RIGHT
STROBE
RESET
U3
MSGEQ7
VDD
AUDIO_IN
STROBE
RESET
DCOUT
CKIN
CG
GND
MSGEQ7
A1
R7
200K
C8
33pF
C9
100nF
U5
ATMEGA328P-AU
+5V
VCC
VCC
AVCC
ADC6
ADC7
AREF
PB0
PB1
PB2
PB3
PB4
PB5
PB6
PB7
GND
GND
GND
PC0
PC1
PC2
PC3
PC4
PC5
PC6
PD0
PD1
PD2
PD3
PD4
PD5
PD6
PD7
A0
A1
RST
RXD
TXD
D2
D3
STROBE
RESET
D6
D7
C13
100nF
X1
16MHz
+5V
P2
D6
Down Button
R11
10KΩ
D7
D
+5V
Up Button
R10
10KΩ
D3
UP
+5V
Cycle Button
R9
10KΩ
D2
CYCLE
+5V
U4
LM1117S-5.0
VIN
IN
TAB
OUT
ADJ/GND
+5V
R8
1K
C11
10uF
C12
100nF
PWR1
+5V
D1
VUSB
+5V
VIN
P1
Power
This version uses DIL-8 package of MSGEQ7
TITLE:
Music Visualizer V2
REV: 1.0
Company: Your Company
Sheet: 1/1
Date: 2020-01-23
Drawn By: the.red.team
EasyEDA