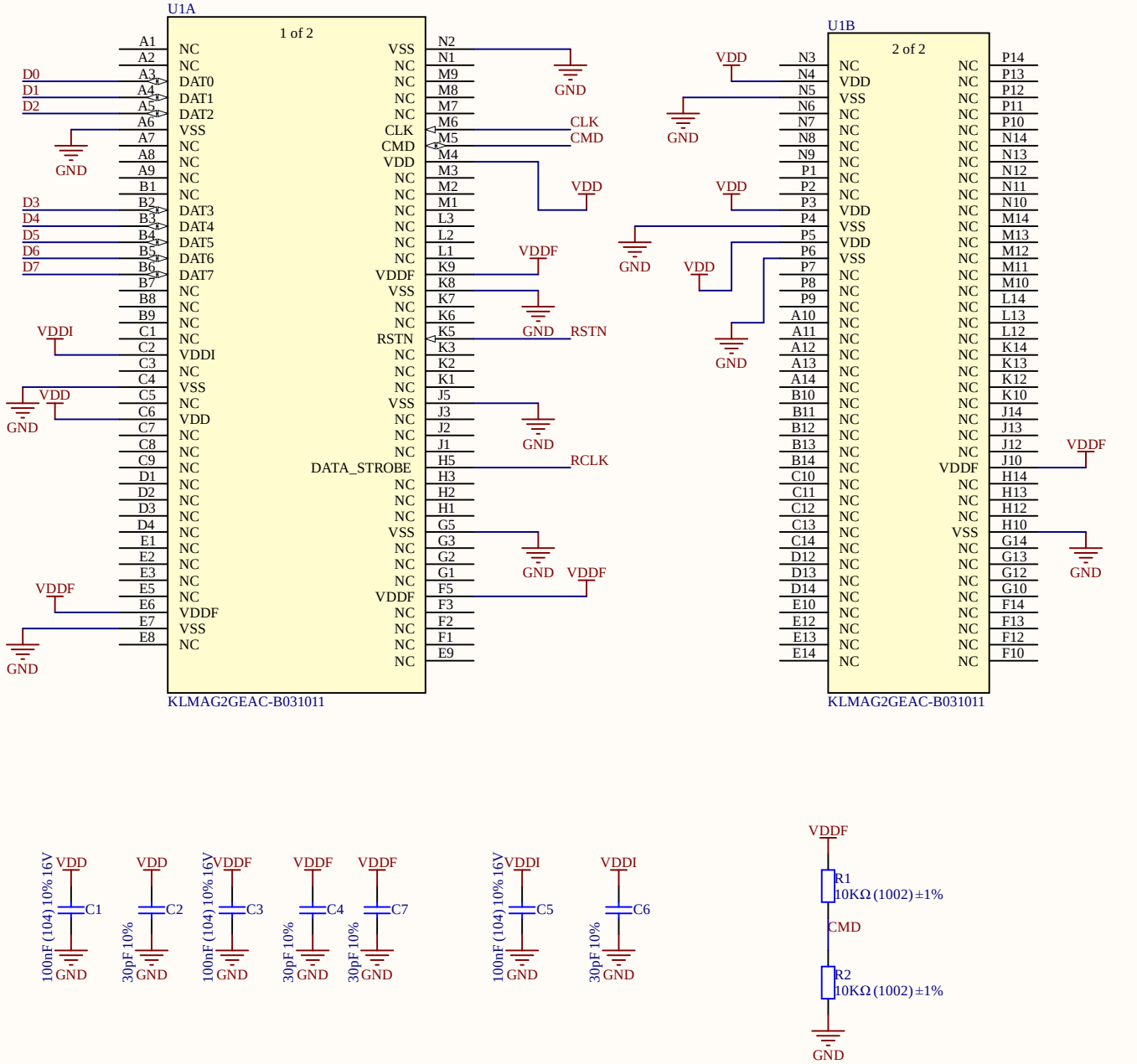

Title		
Size A4	Number	Revision
Date: 9/24/2022		Sheet of
File: D:\workspace\..\main.SchDoc		Drawn By: