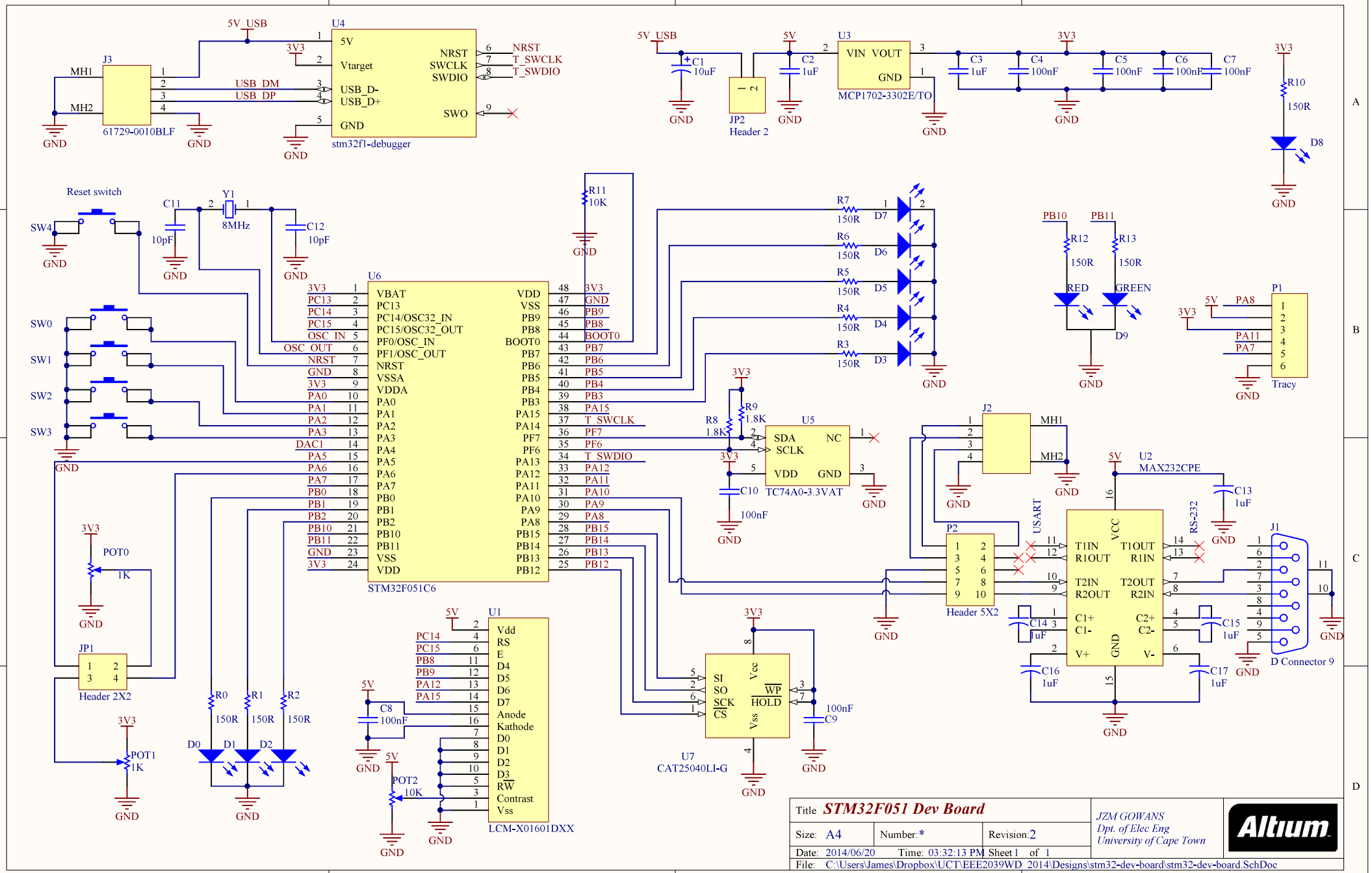
U4
stm32f1-debugger
J3
61729-0010BLF
MH1
MH2
5V_USB
3V3
USB_DM
USB_DP
NRST
T_SWCLK
T_SWDIO
U3
MCP1702-3302E/TO
VIN VOUT
GND
C1 10uF
C2 1uF
C3 1uF
C4 100nF
C5 100nF
C6 100nF
C7 100nF
JP2
Header 2
R10 150R
D8
Reset switch
SW4
C11 10pF
C12 10pF
Y1 8MHz
R11 10K
U6
STM32F051C6
VBAT
PC13
PC14/OSC32_IN
PC15/OSC32_OUT
PF0/OSC_IN
PF1/OSC_OUT
NRST
VSSA
VDDA
PA0
PA1
PA2
PA3
PA4
PA5
PA6
PA7
PB0
PB1
PB2
PB10
PB11
VSS
VDD
VDD
VSS
PB9
PB8
BOOT0
PB7
PB6
PB5
PB4
PB3
PA15
PA14
PF7
PF6
PA13
PA12
PA11
PA10
PA9
PA8
PB15
PB14
PB13
PB12
OSC_IN
OSC_OUT
DAC1
SW0
SW1
SW2
SW3
R7 150R D7
R6 150R D6
R5 150R D5
R4 150R D4
R3 150R D3
PB10 R12 150R RED
PB11 R13 150R GREEN
D9
P1
Tracy
PA8
PA11
PA7
R8 1.8K
R9 1.8K
U5
TC74A0-3.3VAT
SDA
SCLK
NC
VDD
GND
C10 100nF
J2
MH1
MH2
U2
MAX232CPE
C13 1uF
USART
RS-232
T1IN
R1OUT
T1OUT
R1IN
T2IN
R2OUT
T2OUT
R2IN
C1+
C1-
C2+
C2-
V+
V-
VCC
C14 1uF
C15 1uF
C16 1uF
C17 1uF
J1
D Connector 9
P2
Header 5X2
POT0 1K
JP1
Header 2X2
POT1 1K
R0 150R D0
R1 150R D1
R2 150R D2
U1
LCM-X01601DXX
Vdd
RS
E
D4
D5
D6
D7
Anode
Kathode
D0
D1
D2
D3
RW
Contrast
Vss
C8 100nF
POT2 10K
U7
CAT25040LI-G
SI
SO
SCK
CS
Vcc
WP
HOLD
Vss
C9 100nF
Title STM32F051 Dev Board
Size: A4
Number:*
Revision:2
Date: 2014/06/20
Time: 03:32:13 PM
Sheet 1 of 1
File: C:\Users\James\Dropbox\UCT\EEE2039WD 2014\Designs\stm32-dev-board\stm32-dev-board.SchDoc
JZM GOWANS
Dpt. of Elec Eng
University of Cape Town
Altium