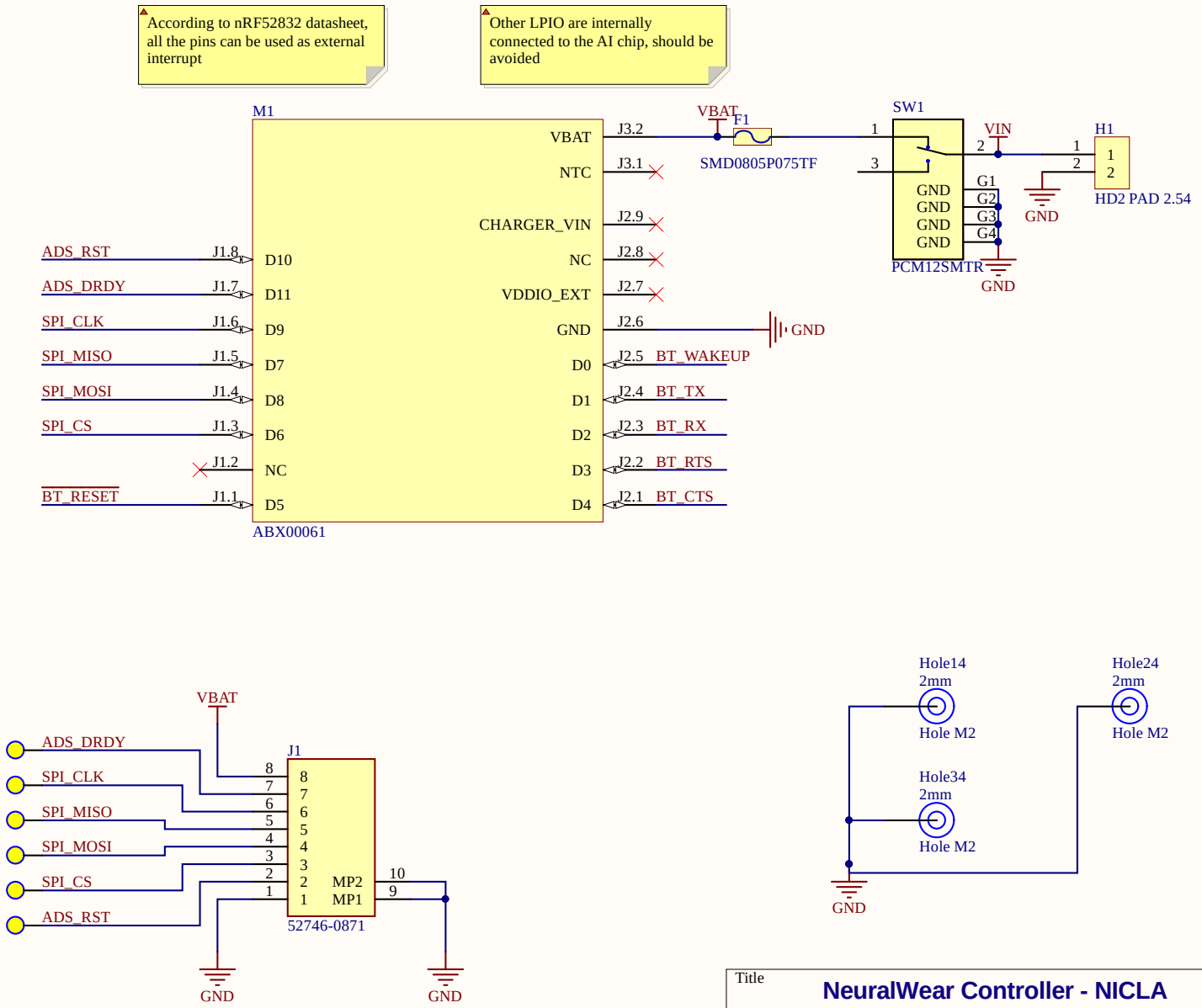

Title		
NeuralWear Controller - NICLA		
Size: A	Number	Revision: 1.0
Date: 26/08/2026		Sheet of
File: C:\Users\..\EEG_Controller.SchDoc		Drawn By: Kha Huynh, Nhat (Nick) Pham

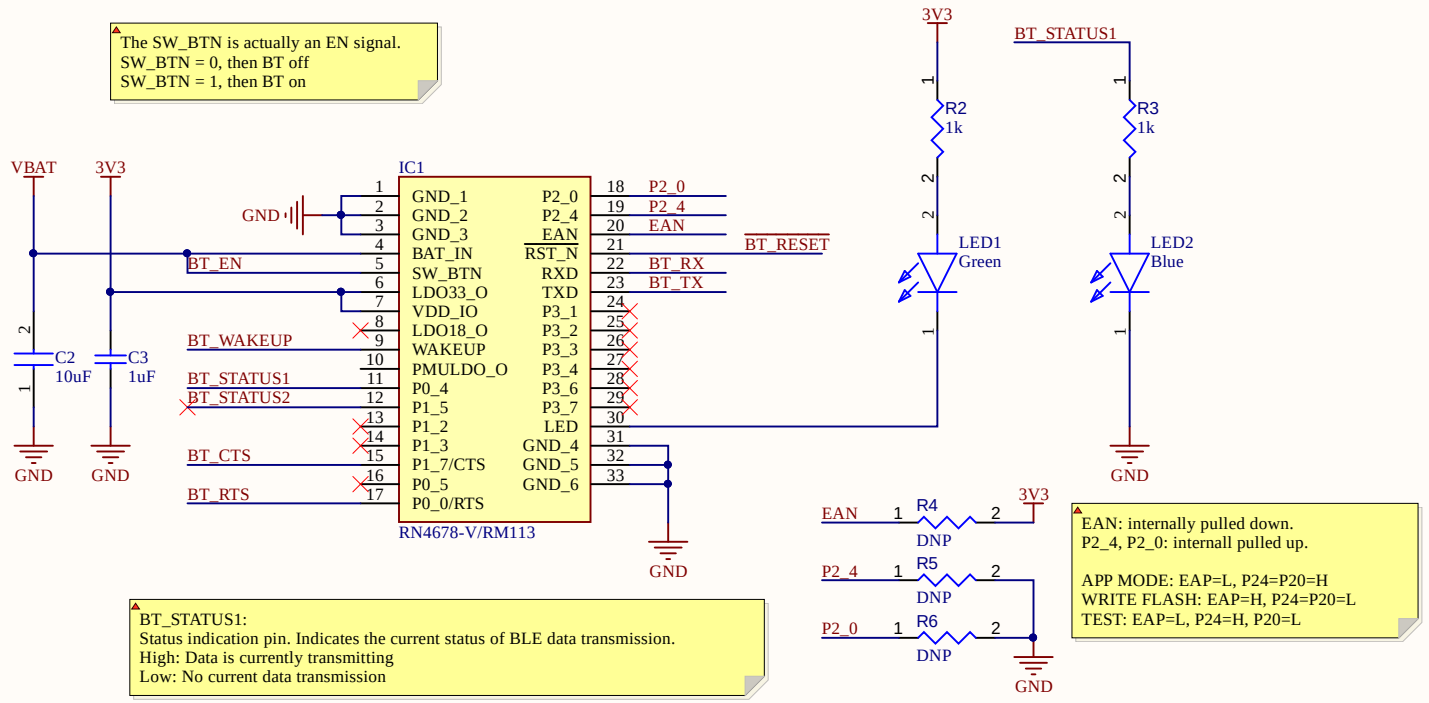

Title	**NeuralWear Controller - RN4678 Dualmode BT**	
Size A4	Number	Revision 1.0
Date: 26/08/2026		Sheet of
File: C:\Users\..\RN4678BLE.SchDoc		Drawn By: Kha Huynh, Nhat (Nick) Pham

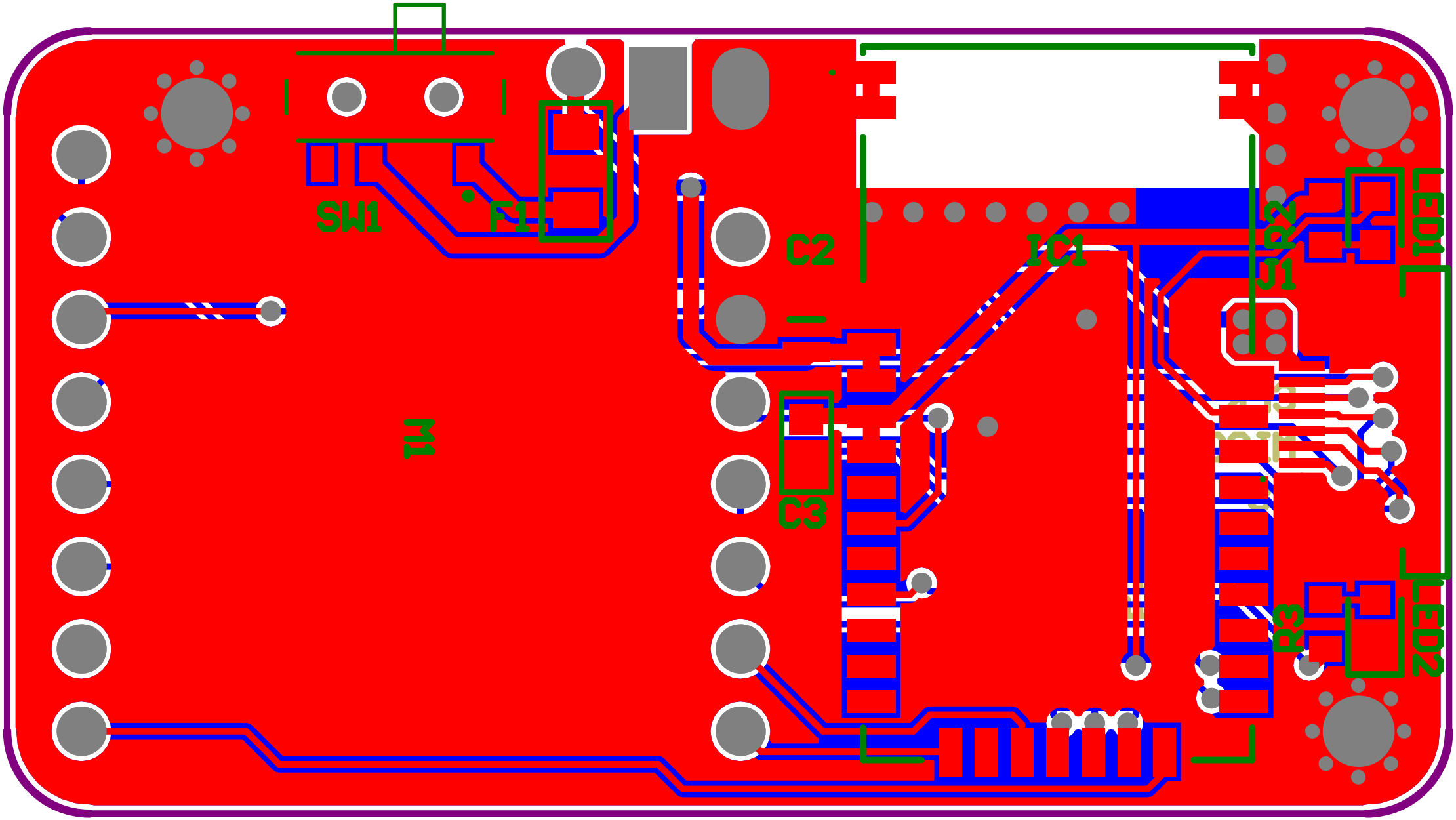
SW1
F1
C2
IC1
J2
J1
LED1
M1
C3
R3
LED2