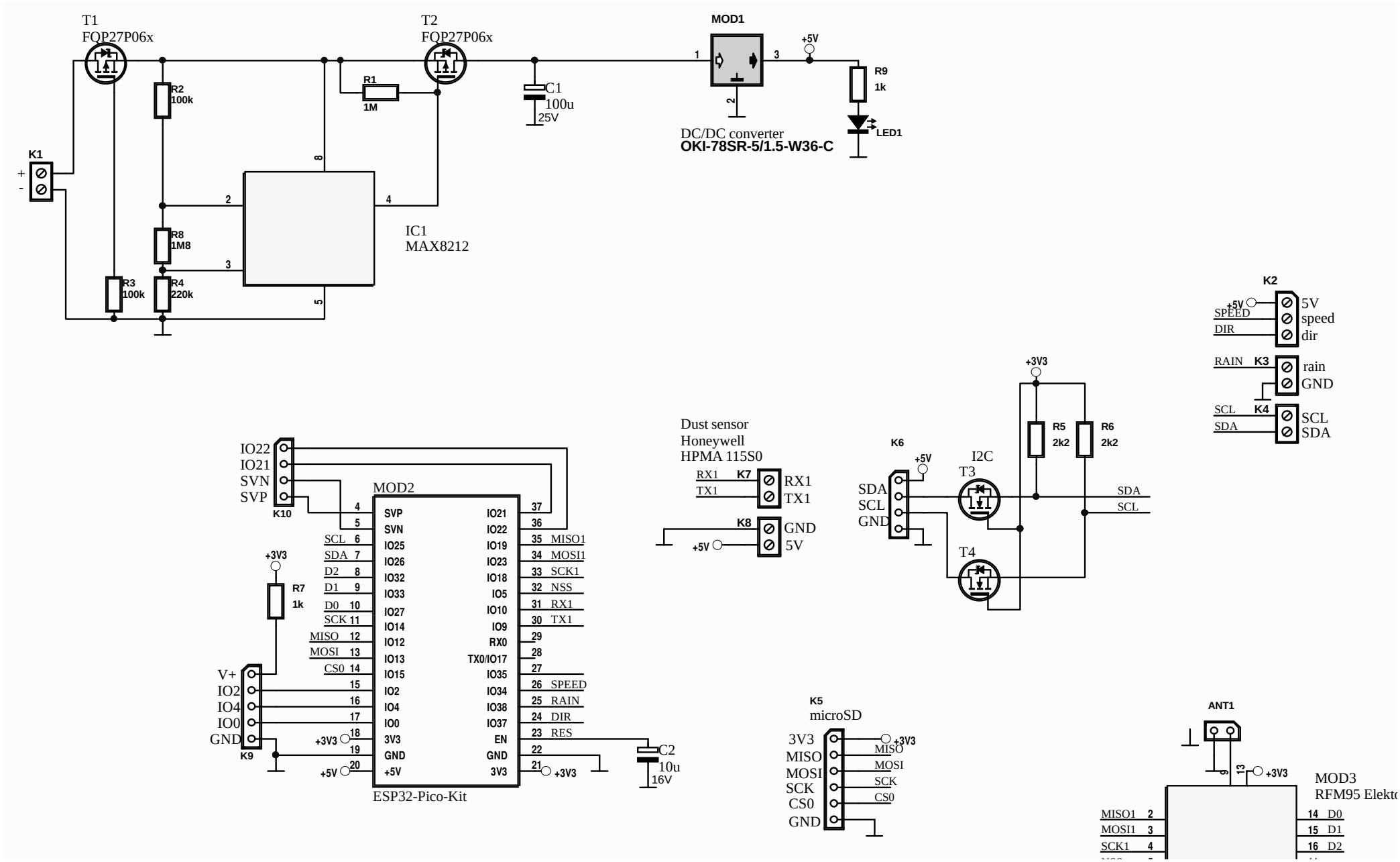
T1
FQP27P06x
T2
FQP27P06x
MOD1
+5V
R9
1k
LED1
DC/DC converter
OKI-78SR-5/1.5-W36-C
C1
100u
25V
R1
1M
R2
100k
R8
1M8
R3
100k
R4
220k
K1
IC1
MAX8212
K2
5V
speed
dir
SPEED
DIR
RAIN
K3
rain
GND
SCL
K4
SDA
+3V3
R5
2k2
R6
2k2
K6
I2C
T3
T4
SDA
SCL
GND
Dust sensor
Honeywell
HPMA 115S0
RX1
TX1
K7
K8
GND
5V
IO22
IO21
SVN
SVP
K10
MOD2
SCL
SDA
D2
D1
D0
SCK
MISO
MOSI
CS0
MISO1
MOSI1
SCK1
NSS
RX1
TX1
SPEED
RAIN
DIR
RES
R7
1k
V+
IO2
IO4
IO0
GND
K9
C2
10u
16V
ESP32-Pico-Kit
K5
microSD
3V3
MISO
MOSI
SCK
CS0
GND
ANT1
MOD3
RFM95 Elektro
MISO1
MOSI1
SCK1
D0
D1
D2