AGRID

Fan Coil Thermostat — AGR25-01

Wiring Diagrams

Full manual: docs.a-grid.com/fan-coil/agr25-01
Support: support@a-grid.com

SCAN ME
docs.a-grid.com/fan-coil/agr25-01

a-grid.com

Rev 1.0 April 2026

Terminal Block Overview

Terminal Block

N	Neutral
L	Phase
RL1	Relay 1
RL2	Relay 2
RL3	Relay 3
RL4	Relay 4
RL5	Relay 5
G	0V Reference
DAC1	0-10V Out 1
DAC2	0-10V Out 2
DAC3	0-10V Out 3
B	Reserved
A	Reserved
S1	Sensor In 1
S2	Sensor In 2

230V~ ZONE

N — Neutral conductor

L — Phase conductor

RL1-RL5 — SPST-NO relay outputs
Max 5A (Ind.) 220-240V~

LOW VOLTAGE ZONE

G — 0V reference

DAC1-DAC3 — 0-10V analog outputs

S1, S2 — External sensor inputs

B, A — Reserved (do not connect)

WIRING SPECS

230V wires (N, L, RL1-5)
1.5 mm²

LV wires (G, DAC, S1, S2)
0.5-0.75 mm²

Max DAC cable length
20 m

Max sensor cable length
20 m

Wire type
Solid or crimped stranded

Shielded cable
Recommended > 10 m

⚠️ **Galvanic isolation between 230V zone (N, L, RL1-RL5) and LV zone (G, DAC, S1, S2)**

Legend & Conventions

OUTPUT ABBREVIATIONS

FH	Fan High Speed
FM	Fan Medium Speed
FL	Fan Low Speed
HV	Hot Valve (Heating)
CV	Cold Valve (Cooling)
HR	Power contactor of Electric Heater (Resistance)
Fan	Fan (0-10V proportional)
N/S	Not Supported

⚠️ SAFETY WARNINGS

- Installation by qualified electrician only
- Disconnect power before wiring
- All-pole disconnection device required (min 3mm gap)
- Relay outputs = control signals only
- For electric heaters: use external power contactor
- B and A terminals: do NOT connect

CONTROL TYPES

ON/OFF (Relay)
Via relay outputs RL1-RL5. Including 3-speed fan mode (3 relays, one per speed).

0-10V (Proportional)
Via DAC outputs DAC1-DAC3. Proportional analog signal for modulating actuators.

EQUIPMENTS

Fan 0 - 10V
Fan 3 Speeds: FH = Fan High | FM = Fan Medium | FL = Fan Low

HV = Heat Valve
CV = Cool Valve

HR = Heating Resistance
(through an external power contactor)

List of configurations - No valves

Without valve

# ↗	Configuration	Fan Regulation Type	Valves Regulation Type	Electric Heater Regulation Type	Output Assignment	Status
1 🔗	Fan Only	3-speed	x	x	RL1=FH, RL2=FM, RL3=FL	OK
2 🔗	Fan Only	0-10V	x	x	DAC3=Fan	OK

Without valve + Electric Heater

# ↗	Configuration	Fan Regulation Type	Valves Regulation Type	Electric Heater Regulation Type	Output Assignment	Status
3 🔗	Fan Only + Electric Heater	3-speed	x	ON/OFF	RL1=FH, RL2=FM, RL3=FL, RL5=HR	OK
4 🔗	Fan Only + Electric Heater	0-10V	x	ON/OFF	DAC3=Fan, RL5=HR	OK

⚠️ **HR (electric heater) must NEVER be directly switched by relay. Use an external power contactor.**

List of configurations - 2 pipes / 2 pipes + 2 wires

2-pipe mixed - heat only - cool only (2T)

# ↗	Configuration	Fan Regulation Type	Valves Regulation Type	Electric Heater Regulation Type	Output Assignment	Status
5 🔗	2T: Fan + 1 Valve	3-speed	ON/OFF	x	RL1=FH, RL2=FM, RL3=FL, RL4=HV	OK
6 🔗	2T: Fan + 1 Valve	3-speed	0-10V	x	RL1=FH, RL2=FM, RL3=FL, DAC1=HV	OK
7 🔗	2T: Fan + 1 Valve	0-10V	ON/OFF	x	DAC3=Fan, RL4=HV	OK
8 🔗	2T: Fan + 1 Valve	0-10V	0-10V	x	DAC1=HV, DAC3=Fan	OK

2-pipe (mixed - heat only - cool only) + Electric Heater (2T + 2 wires)

# ↗	Configuration	Fan Regulation Type	Valves Regulation Type	Electric Heater Regulation Type	Output Assignment	Status
9 🔗	2T + 2 wires: Fan + 1 Valve + Heater	3-speed	ON/OFF	ON/OFF	RL1=FH, RL2=FM, RL3=FL, RL4=HV, RL5=HR	OK
10 🔗	2T + 2 wires: Fan + 1 Valve + Heater	3-speed	0-10V	ON/OFF	RL1=FH, RL2=FM, RL3=FL, DAC1=HV, RL5=HR	OK
11 🔗	2T + 2 wires: Fan + 1 Valve + Heater	0-10V	ON/OFF	ON/OFF	DAC3=Fan, RL4=HV, RL5=HR	OK
12 🔗	2T + 2 wires: Fan + 1 Valve + Heater	0-10V	0-10V	ON/OFF	DAC1=HV, DAC3=Fan, RL5=HR	OK

⚠️ **HR (electric heater) must NEVER be directly switched by relay. Use an external power contactor.**

List of configurations - 4 pipes

4-pipe (4T)

# ↗	Configuration	Fan Regulation Type	Valves Regulation Type	Electric Heater Regulation Type	Output Assignment	Status
13 🔗	4T: Fan + 2 Valves	3-speed	ON/OFF	x	RL1=FH, RL2=FM, RL3=FL, RL4=HV, RL5=CV	OK
14 🔗	4T: Fan + 2 Valves	3-speed	0-10V	x	RL1=FH, RL2=FM, RL3=FL, DAC1=HV, DAC2=CV	OK
15 🔗	4T: Fan + 2 Valves	0-10V	ON/OFF	x	DAC3=Fan, RL4=HV, RL5=CV	OK
16 🔗	4T: Fan + 2 Valves	0-10V	0-10V	x	DAC1=HV, DAC2=CV, DAC3=Fan	OK

4-pipe + Electric Heater (4T + 2 wires)

# ↗	Configuration	Fan Regulation Type	Valves Regulation Type	Electric Heater Regulation Type	Output Assignment	Status
17 🔗	4T + 2 wires: Fan + 2 Valves + Heater	3-speed	0-10V	ON/OFF	RL1=FH, RL2=FM, RL3=FL, DAC1=HV, DAC2=CV, RL5=HR	OK
18 🔗	4T + 2 wires: Fan + 2 Valves + Heater	0-10V	ON/OFF	ON/OFF	DAC3=Fan, RL4=HV, RL5=CV, RL3=HR	OK
19 🔗	4T + 2 wires: Fan + 2 Valves + Heater	0-10V	0-10V	ON/OFF	DAC1=HV, DAC2=CV, DAC3=Fan, RL5=HR	OK
20 🔗	4T + 2 wires: Fan + 2 Valves + Heater	3-speed	ON/OFF	ON/OFF	x	N/S (Not enough relays)

⚠️ **HR (electric heater) must NEVER be directly switched by relay. Use an external power contactor.**

Detailed wiring schematics

Fan Coil Thermostat — AGR25-01

Configuration #1

#	Configuration	Fan Regulation Type	Valves Regulation Type	Electric Heater Regulation Type	Output Assignment	Status
1	Fan Only	3-speed	x	x	RL1=FH, RL2=FM, RL3=FL	OK

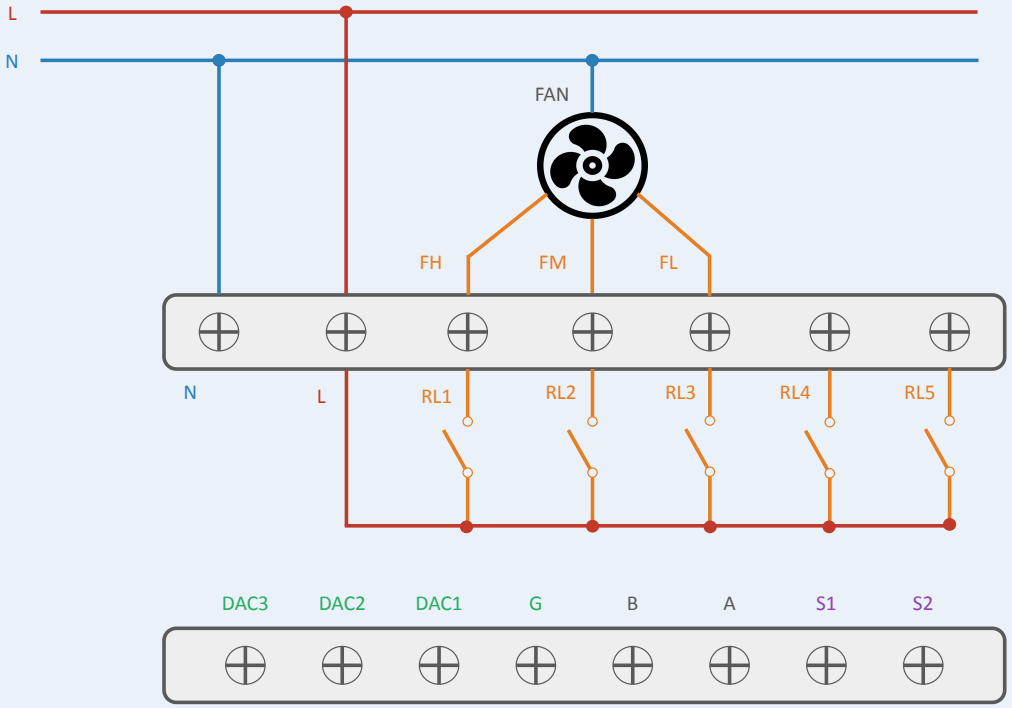

Configuration #2

#	Configuration	Fan Regulation Type	Valves Regulation Type	Electric Heater Regulation Type	Output Assignment	Status
2	Fan Only	0-10V	x	x	DAC3=Fan	**OK**

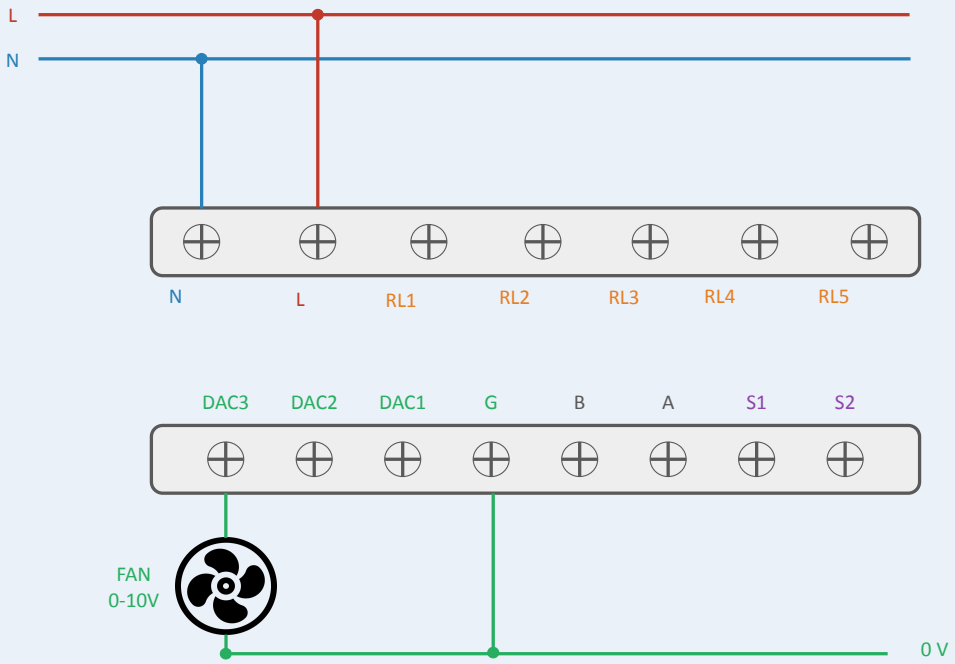

Configuration #3

#	Configuration	Fan Regulation Type	Valves Regulation Type	Electric Heater Regulation Type	Output Assignment	Status
3	Fan Only + Electric Heater	3-speed	x	ON/OFF	RL1=FH, RL2=FM, RL3=FL, RL5=HR	OK

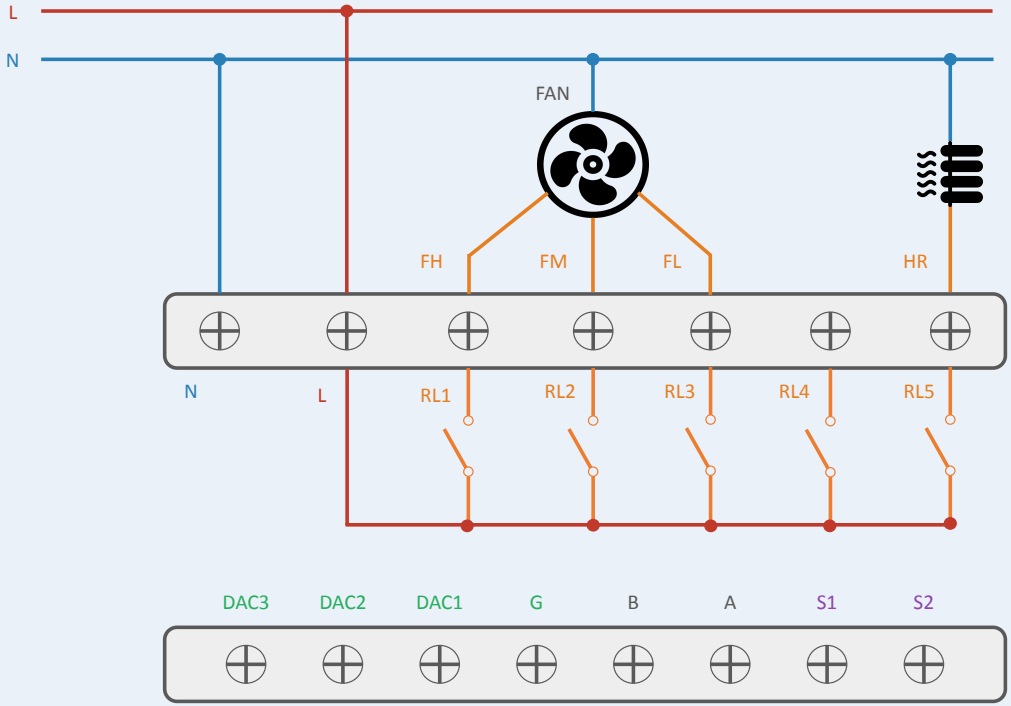

⚠️ HR (electric heater) must NEVER be directly switched by relay. Use an external power contactor.

Configuration #4

#	Configuration	Fan Regulation Type	Valves Regulation Type	Electric Heater Regulation Type	Output Assignment	Status
4	Fan Only + Electric Heater	0-10V	x	ON/OFF	DAC3=Fan, RL5=HR	OK

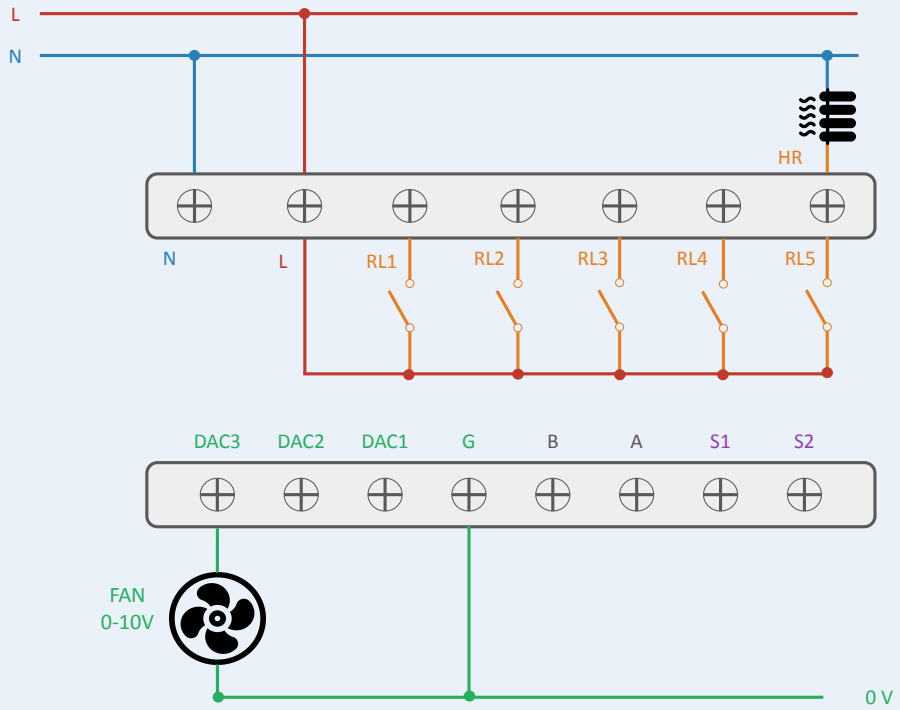

⚠️ HR (electric heater) must NEVER be directly switched by relay. Use an external power contactor.

Configuration #5

#	Configuration	Fan Regulation Type	Valves Regulation Type	Electric Heater Regulation Type	Output Assignment	Status
5	2T: Fan + 1 Valve	3-speed	ON/OFF	x	RL1=FH, RL2=FM, RL3=FL, RL4=HV	**OK**

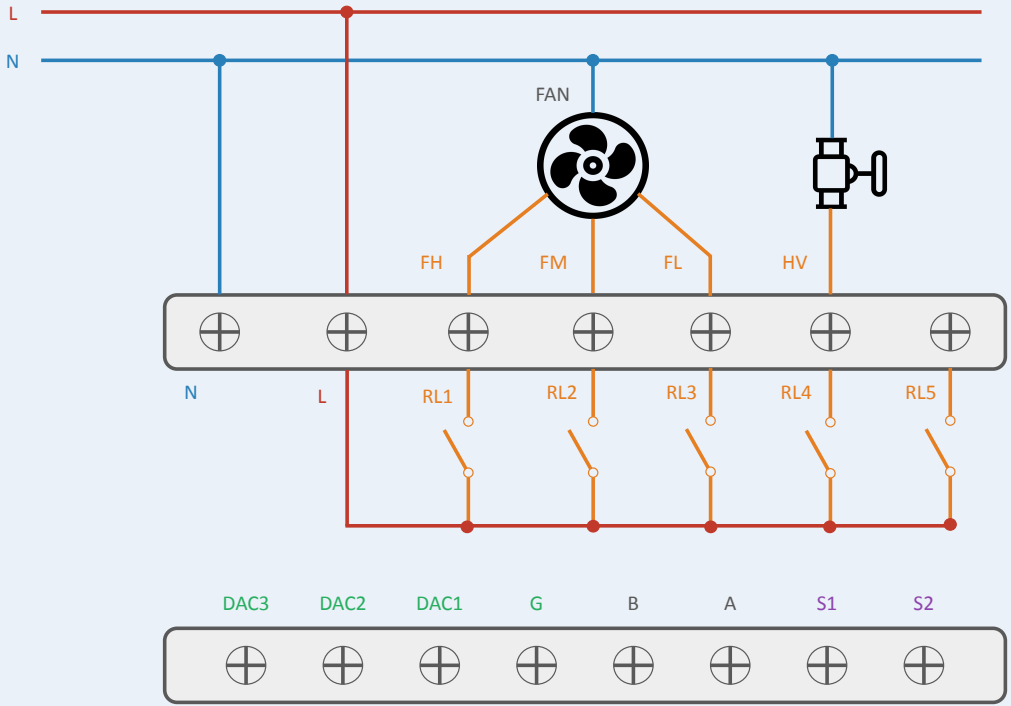

Configuration #6

#	Configuration	Fan Regulation Type	Valves Regulation Type	Electric Heater Regulation Type	Output Assignment	Status
6	2T: Fan + 1 Valve	3-speed	0-10V	x	RL1=FH, RL2=FM, RL3=FL, DAC1=HV	OK

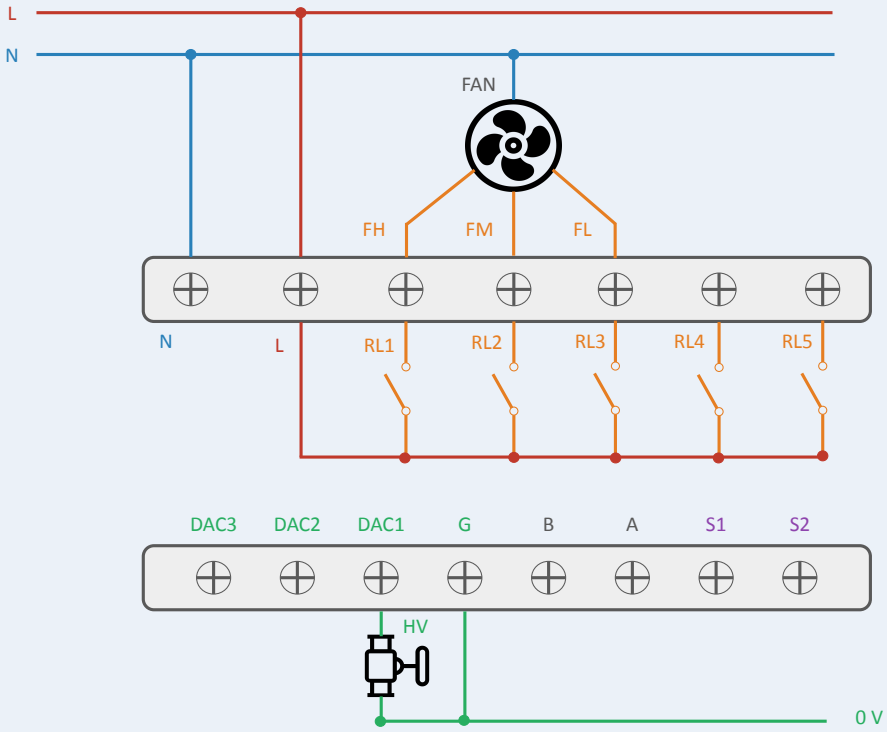

Configuration #7

#	Configuration	Fan Regulation Type	Valves Regulation Type	Electric Heater Regulation Type	Output Assignment	Status
7	2T: Fan + 1 Valve	0-10V	ON/OFF	x	DAC3=Fan, RL4=HV	**OK**

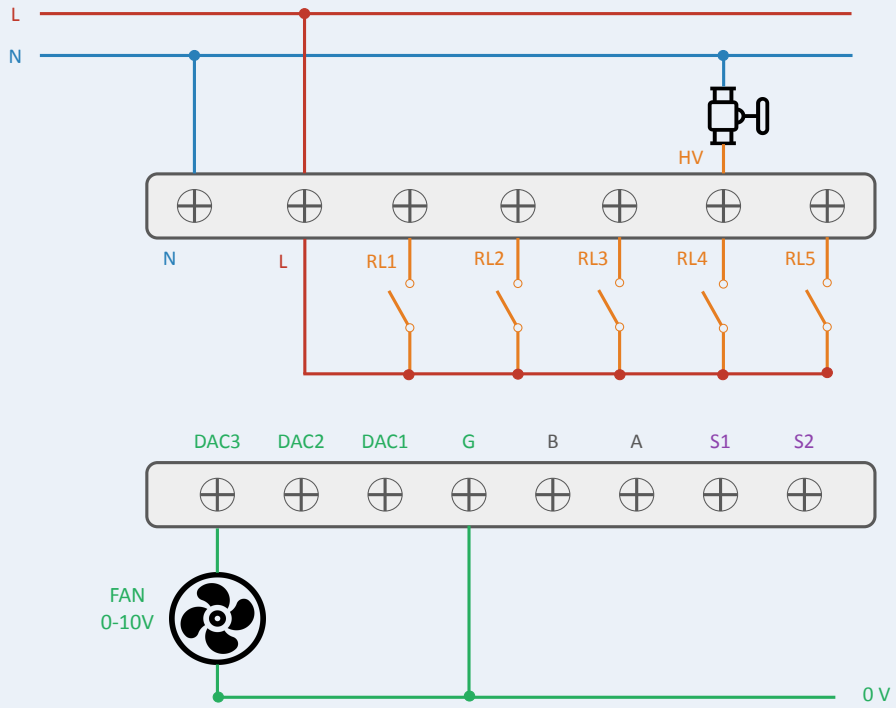

Configuration #8

#	Configuration	Fan Regulation Type	Valves Regulation Type	Electric Heater Regulation Type	Output Assignment	Status
8	2T: Fan + 1 Valve	0-10V	0-10V	x	DAC1=HV, DAC3=Fan	**OK**

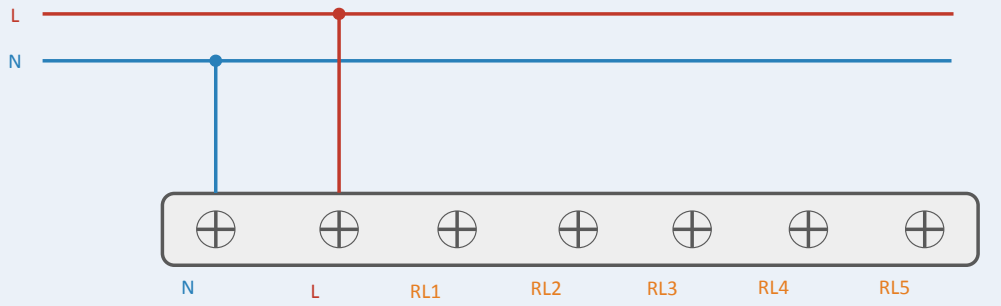

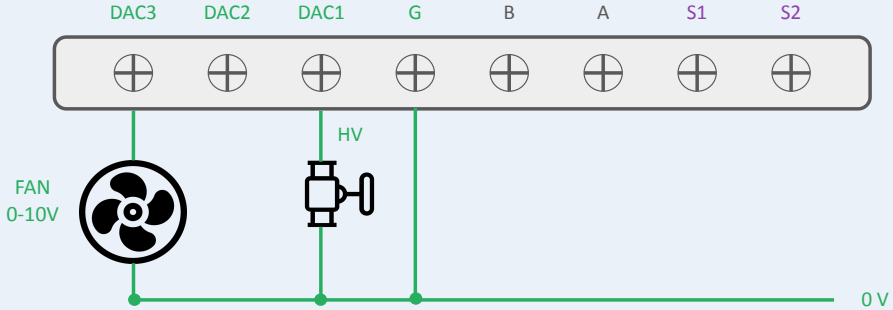

Configuration #9

#	Configuration	Fan Regulation Type	Valves Regulation Type	Electric Heater Regulation Type	Output Assignment	Status
9	2T + 2 wires: Fan + 1 Valve + Heater	3-speed	ON/OFF	ON/OFF	RL1=FH, RL2=FM, RL3=FL, RL4=HV, RL5=HR	OK

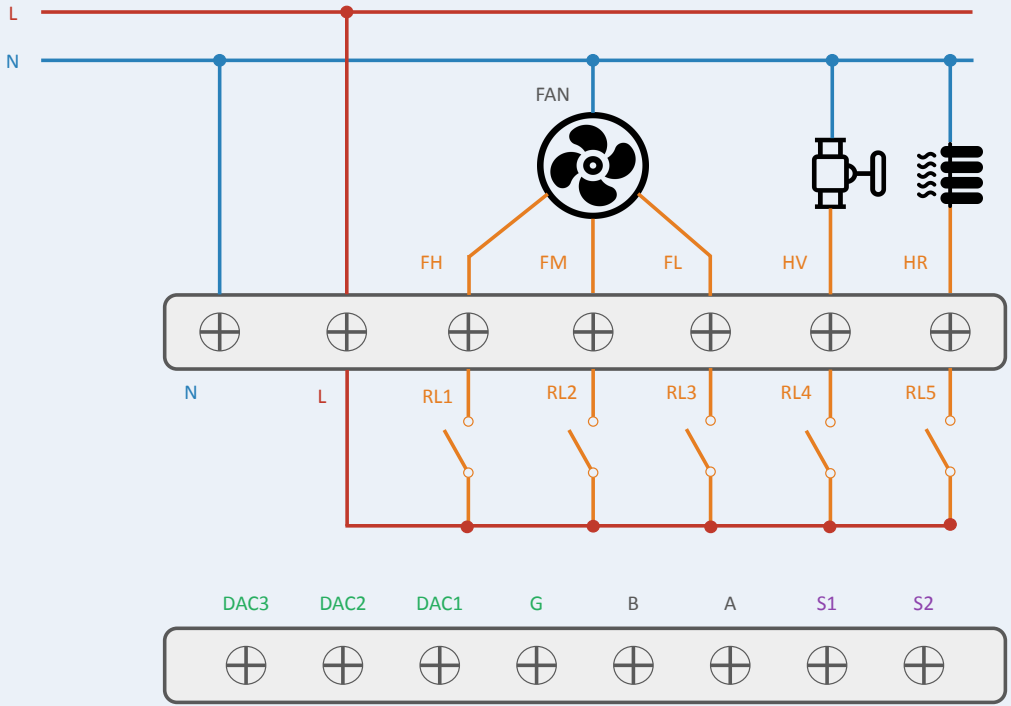

⚠️ **HR (electric heater) must NEVER be directly switched by relay. Use an external power contactor.**

Configuration #10

#	Configuration	Fan Regulation Type	Valves Regulation Type	Electric Heater Regulation Type	Output Assignment	Status
10	2T + 2 wires: Fan + 1 Valve + Heater	3-speed	0-10V	ON/OFF	RL1=FH, RL2=FM, RL3=FL, DAC1=HV, RL5=HR	**OK**

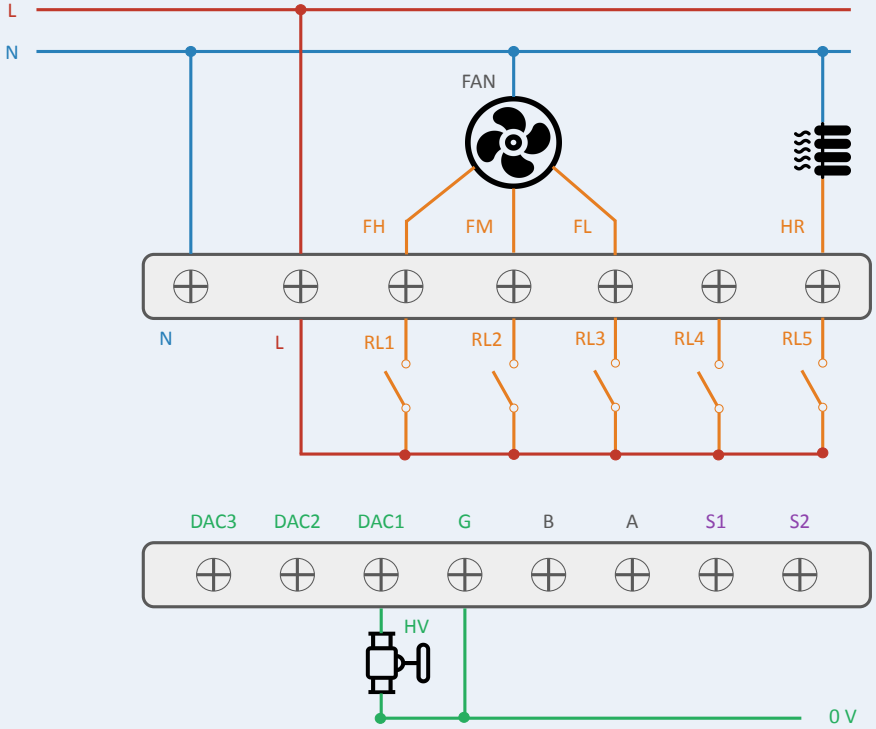

⚠️ **HR (electric heater) must NEVER be directly switched by relay. Use an external power contactor.**

Configuration #11

#	Configuration	Fan Regulation Type	Valves Regulation Type	Electric Heater Regulation Type	Output Assignment	Status
11	2T + 2 wires: Fan + 1 Valve + Heater	0-10V	ON/OFF	ON/OFF	DAC3=Fan, RL4=HV, RL5=HR	**OK**

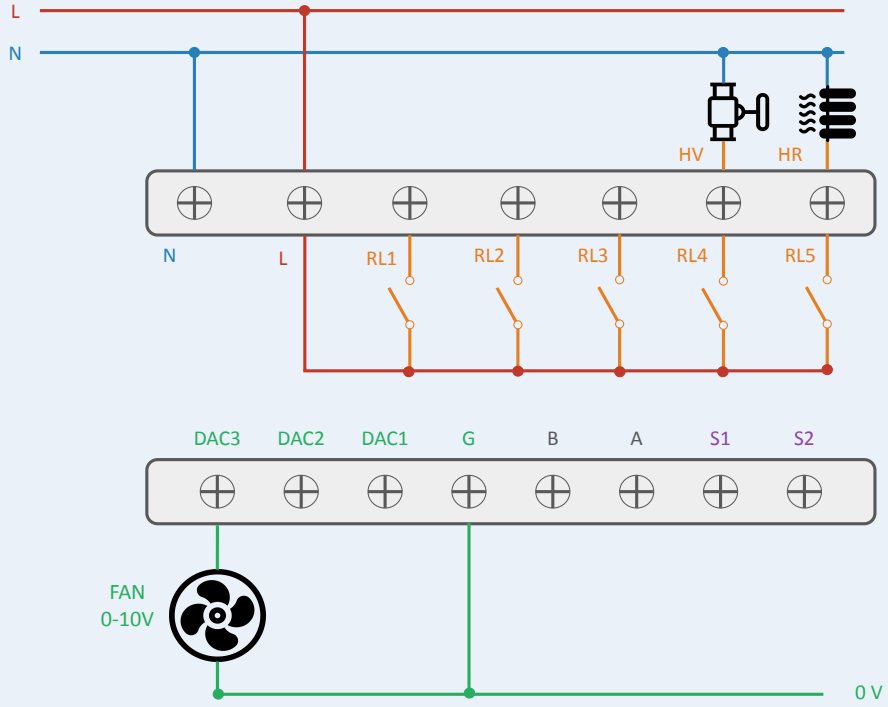

⚠️ **HR (electric heater) must NEVER be directly switched by relay. Use an external power contactor.**

Configuration #12

#	Configuration	Fan Regulation Type	Valves Regulation Type	Electric Heater Regulation Type	Output Assignment	Status
12	2T + 2 wires: Fan + 1 Valve + Heater	0-10V	0-10V	ON/OFF	DAC1=HV, DAC3=Fan, RL5=HR	**OK**

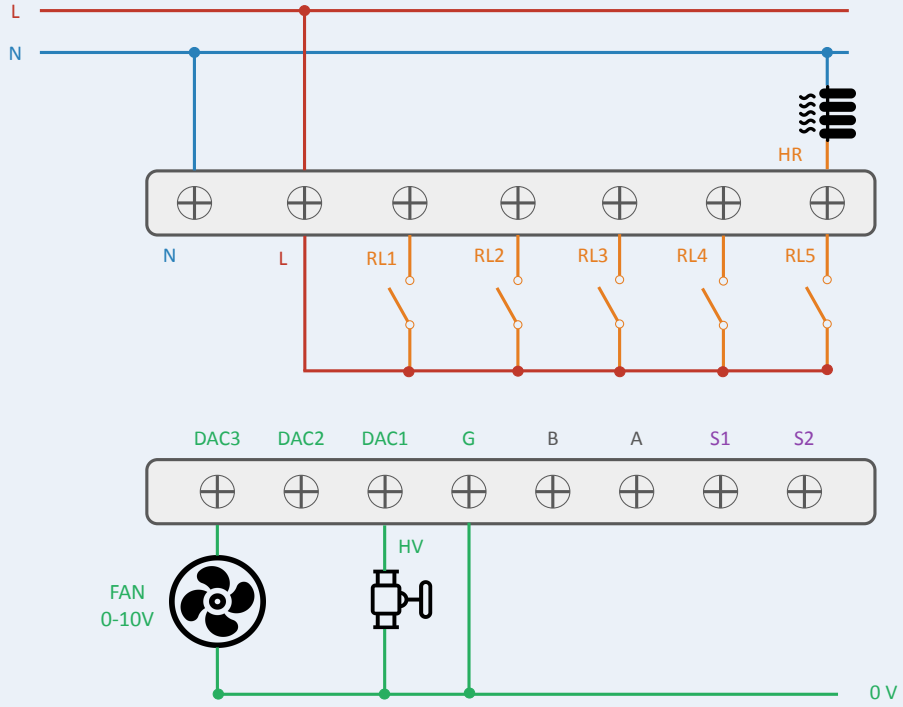

⚠️ **HR (electric heater) must NEVER be directly switched by relay. Use an external power contactor.**

Configuration #13

#	Configuration	Fan Regulation Type	Valves Regulation Type	Electric Heater Regulation Type	Output Assignment	Status
13	4T: Fan + 2 Valves	3-speed	ON/OFF	x	RL1=FH, RL2=FM, RL3=FL, RL4=HV, RL5=CV	**OK**

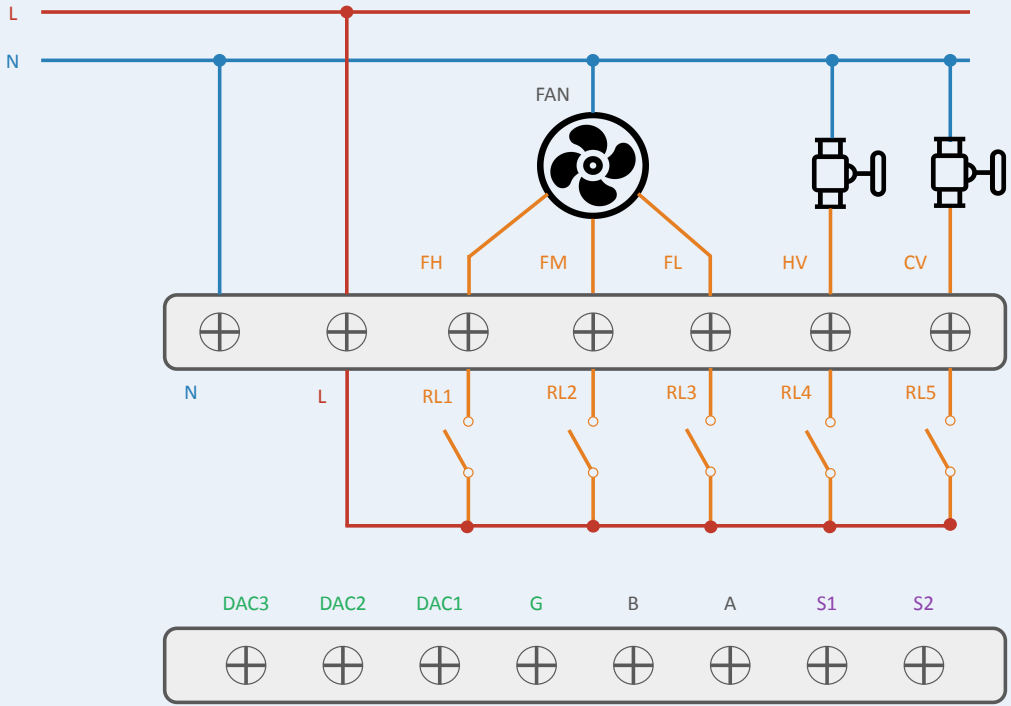

Configuration #14

#	Configuration	Fan Regulation Type	Valves Regulation Type	Electric Heater Regulation Type	Output Assignment	Status
14	4T: Fan + 2 Valves	3-speed	0-10V	x	RL1=FH, RL2=FM, RL3=FL, DAC1=HV, DAC2=CV	**OK**

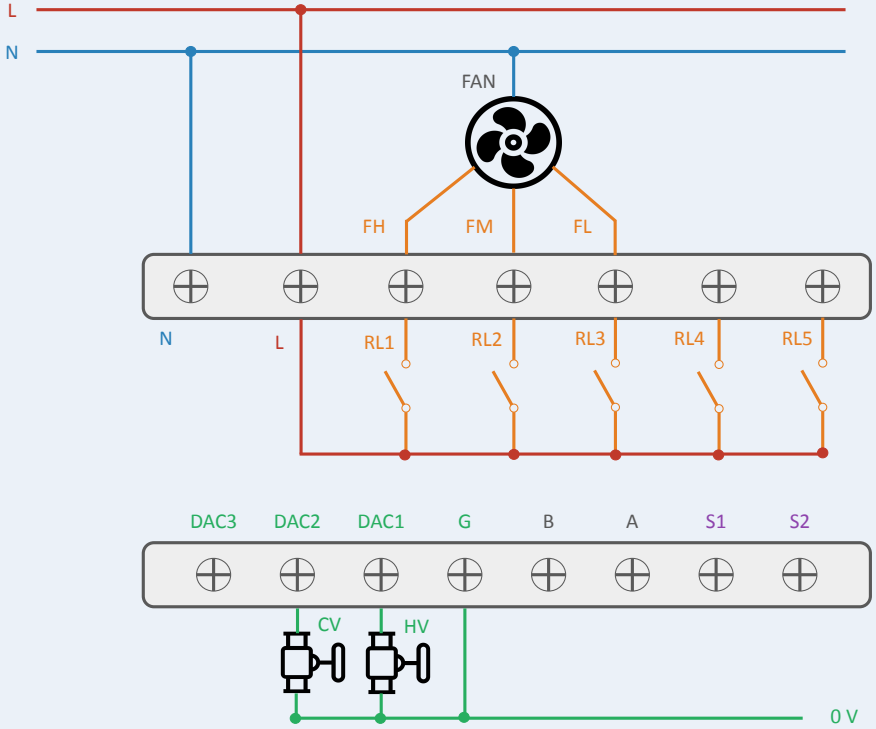

Configuration #15

#	Configuration	Fan Regulation Type	Valves Regulation Type	Electric Heater Regulation Type	Output Assignment	Status
15	4T: Fan + 2 Valves	0-10V	ON/OFF	x	DAC3=Fan, RL4=HV, RL5=CV	**OK**

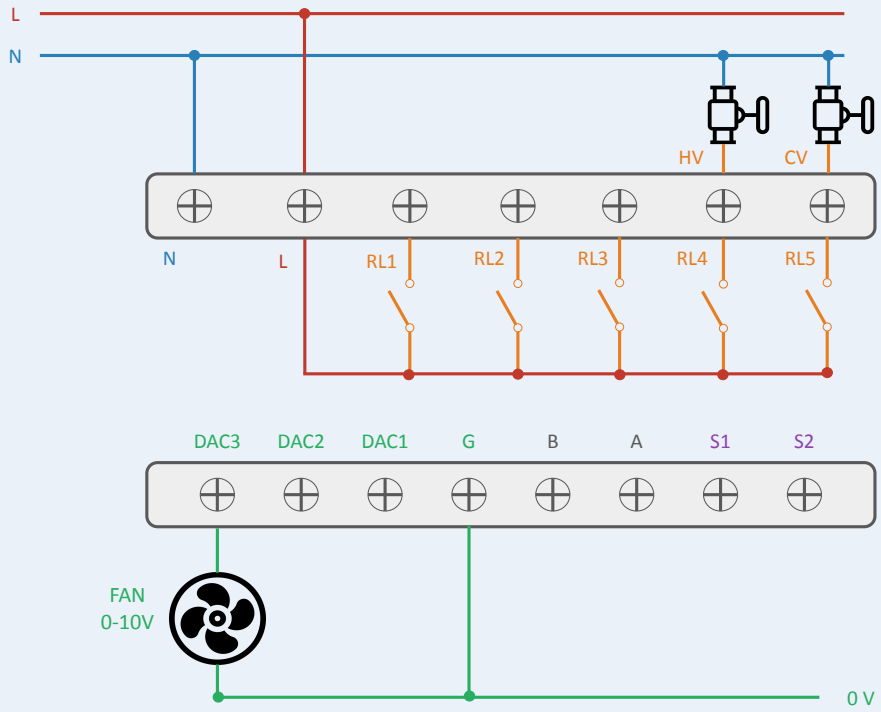

Configuration #16

#	Configuration	Fan Regulation Type	Valves Regulation Type	Electric Heater Regulation Type	Output Assignment	Status
16	4T: Fan + 2 Valves	0-10V	0-10V	x	DAC1=HV, DAC2=CV, DAC3=Fan	**OK**

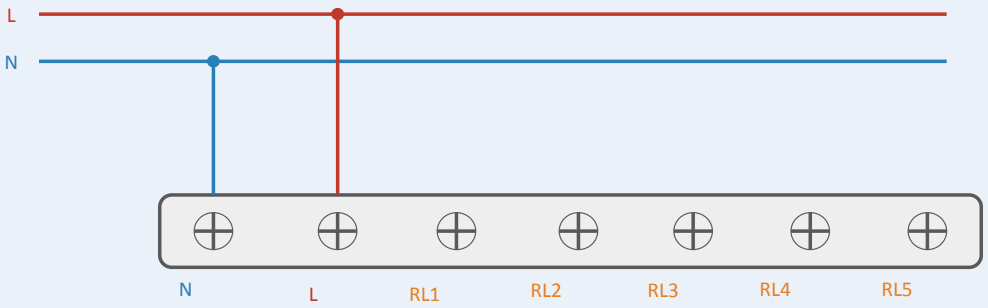

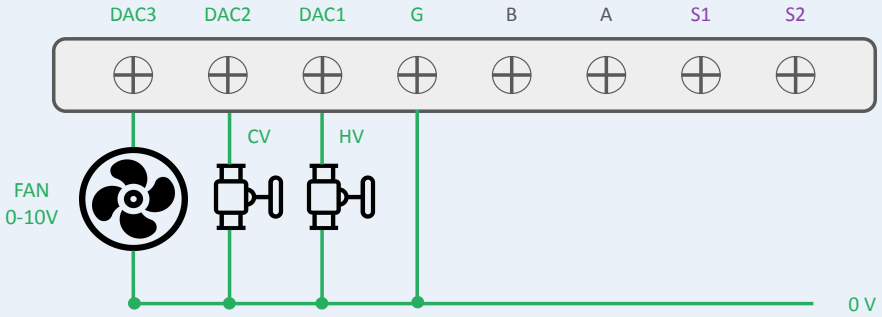

Configuration #17

#	Configuration	Fan Regulation Type	Valves Regulation Type	Electric Heater Regulation Type	Output Assignment	Status
17	4T + 2 wires: Fan + 2 Valves + Heater	3-speed	0-10V	ON/OFF	RL1=FH, RL2=FM, RL3=FL, DAC1=HV, DAC2=CV, RL5=HR	**OK**

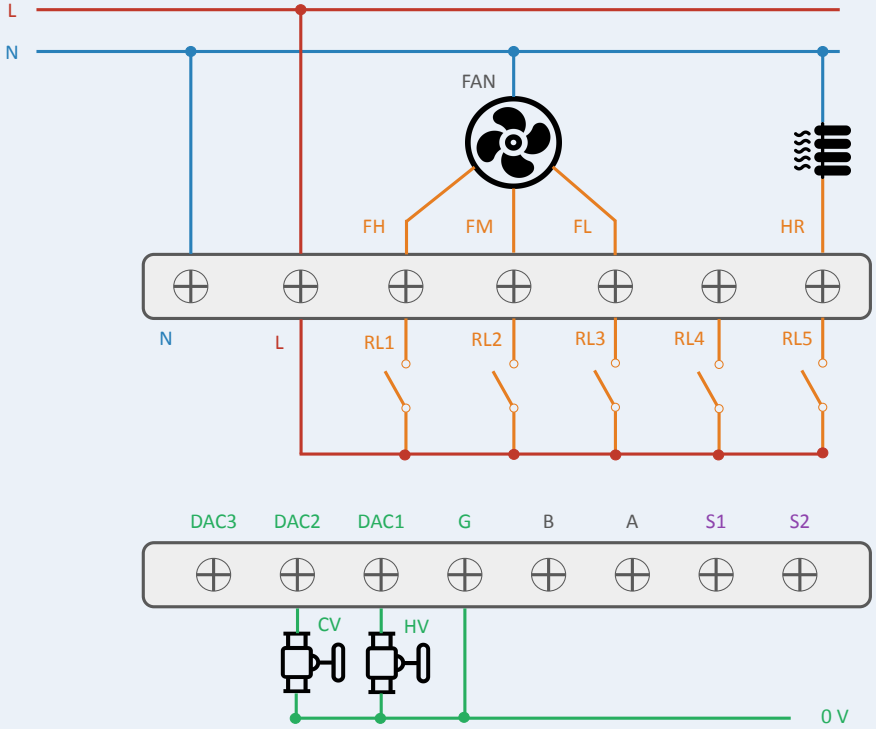

⚠️ **HR (electric heater) must NEVER be directly switched by relay. Use an external power contactor.**

Configuration #18

#	Configuration	Fan Regulation Type	Valves Regulation Type	Electric Heater Regulation Type	Output Assignment	Status
18	4T + 2 wires: Fan + 2 Valves + Heater	0-10V	ON/OFF	ON/OFF	DAC3=Fan, RL4=HV, RL5=CV, RL3=HR	**OK**

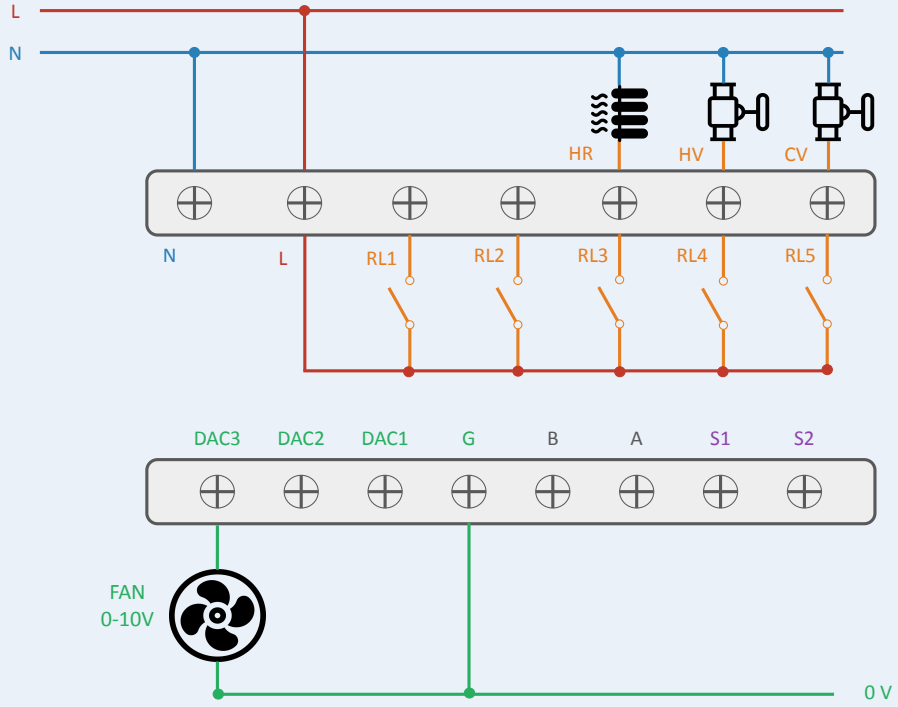

⚠️ **HR (electric heater) must NEVER be directly switched by relay. Use an external power contactor.**

Configuration #19

#	Configuration	Fan Regulation Type	Valves Regulation Type	Electric Heater Regulation Type	Output Assignment	Status
19	4T + 2 wires: Fan + 2 Valves + Heater	0-10V	0-10V	ON/OFF	DAC1=HV, DAC2=CV, DAC3=Fan, RL5=HR	**OK**

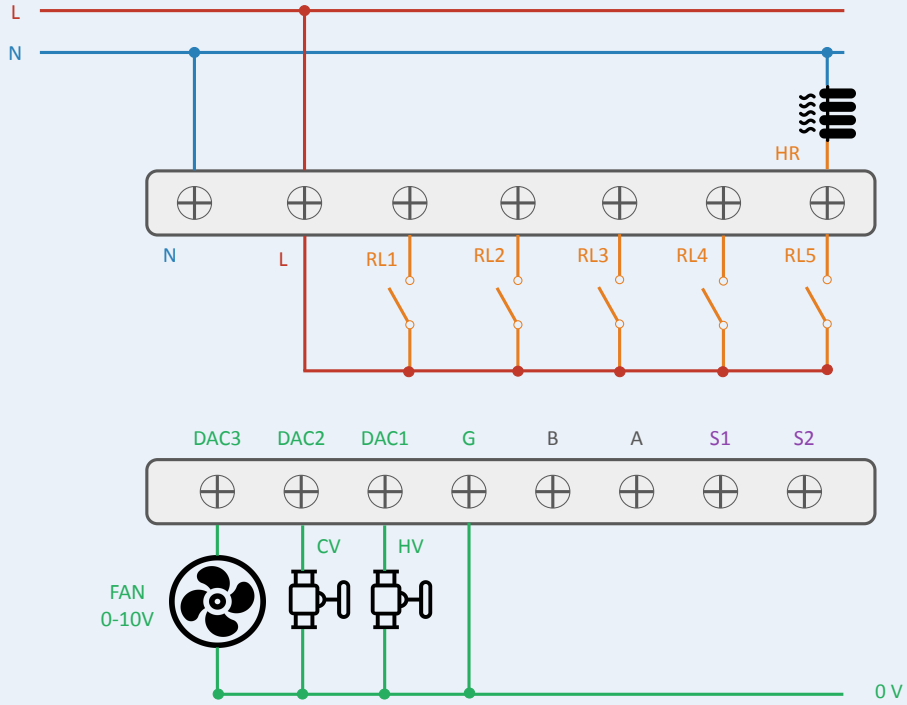

⚠️ **HR (electric heater) must NEVER be directly switched by relay. Use an external power contactor.**

External Sensors wiring schematics

Fan Coil Thermostat — AGR25-01

External Sensors (S1, S2)

ANALOG SENSOR (Thermistor)

Remote temperature measurement

Applications:
- Supply air temperature
- Outdoor temperature
- Return air temperature
- Pipe changeover detection (2-pipe auto H/C switching)

Connection: S1 or S2 + G (0V ref)

DIGITAL SENSOR (Dry Contact)

ON/OFF state detection

Applications:
- Window open/close detector
- Key card / badge presence
- External PIR detector

Connection: S1 or S2 + G (0V ref)

⚠️ **Sensors requiring external power must have their own power supply with adequate galvanic isolation.**

Sensor wiring: Analog Sensors - Thermistor

Sensor Type	Connection	Input	Signal	Applications
Thermistor	S1 or S2 + G (0V ref)	Analog	Resistance variation	Supply / Outdoor / Return air temp. / pipe changeover detection (2-pipe auto H/C switching) / etc …

WIRING NOTES

Connect thermistor between **S1** (or S2) and **G**

- No external power supply needed
- 2-wire, no polarity
- Max cable length: 20 m

CONFIGURATION

Sensor type must be configured:

- Via thermostat parameter screen
- Via AGRID App (or via BMS)

SUPPORTED THERMISTORS

(reference list)

- NTC 5K
- NTC 10K Type II & Type III
- NTC 20K
- PT1000
- PT 500

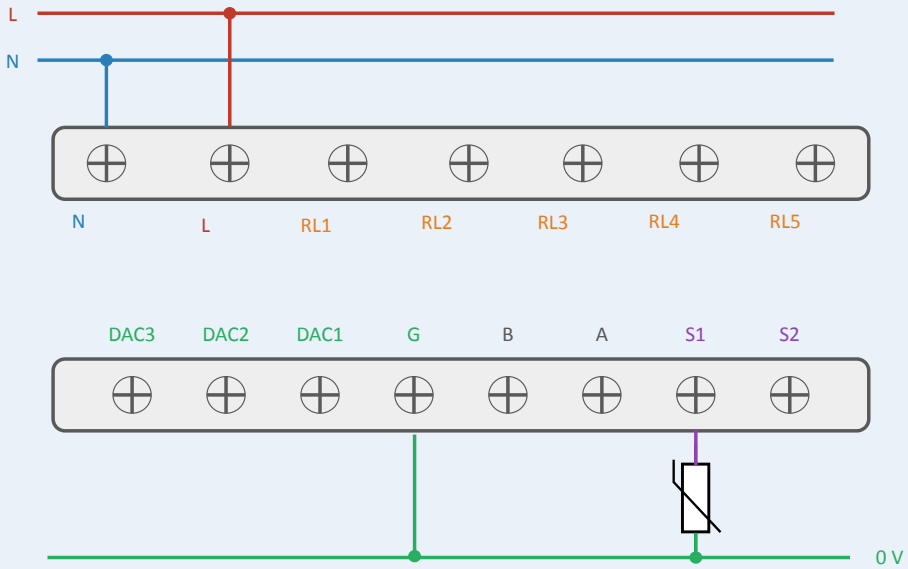

ℹ Thermistor provides remote temperature measurement — supply air, outdoor, return air temperature, pipe changeover detection (2-pipe auto H/C switching)

Sensor wiring: Dry Contact

Sensor Type	Connection	Input	Signal	Applications
Dry Contact (Switch)	S1 or S2 + G (0V ref)	Digital	ON/OFF state	Window detector, key card, badge …

WIRING NOTES

Connect switch between **S1** (or S2) and **G**

- No external power supply needed
- Voltage-free contact only
- Max cable length: 20 m

CONFIGURATION

Sensor type must be configured:

- Via thermostat parameter screen
- Via AGRID App (or via BMS)

APPLICATIONS

- Window open/close detector
- Key card / badge presence
- Any voltage-free contact

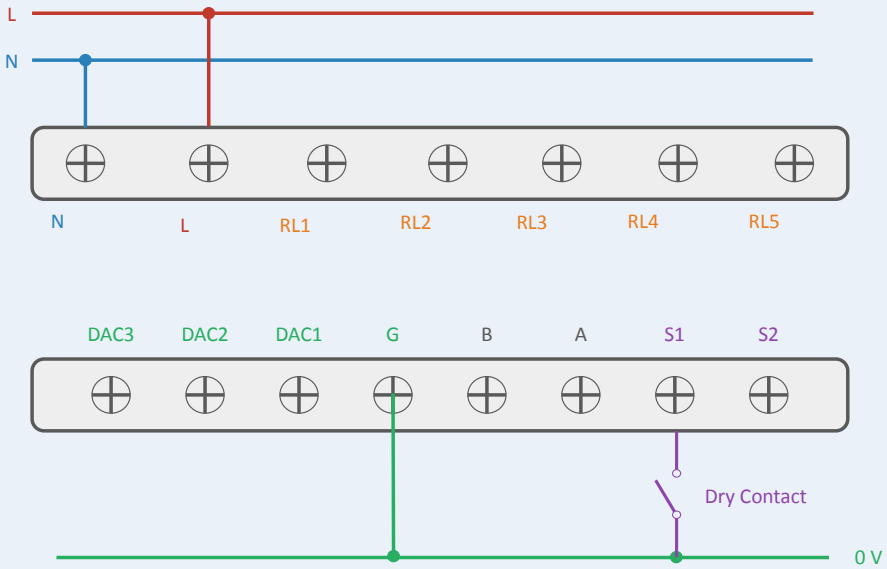

i Dry contact sensor provides ON/OFF state detection - no external power supply required

Sensor wiring: PIR Detector

Sensor Type	Connection	Input	Signal	Power Supply
PIR Motion Detector	S1 or S2 + G (0V ref)	Digital	ON/OFF (dry contact)	External (separate PSU)

WIRING NOTES

Connect PIR dry contact output between **S1** (or S2) and **G**

- **PIR requires its own PSU**
  Refer to PIR sensor manual for power supply specifications

CONFIGURATION

Sensor type must be configured:

- Via thermostat parameter screen
- Via AGRID App (or via BMS)

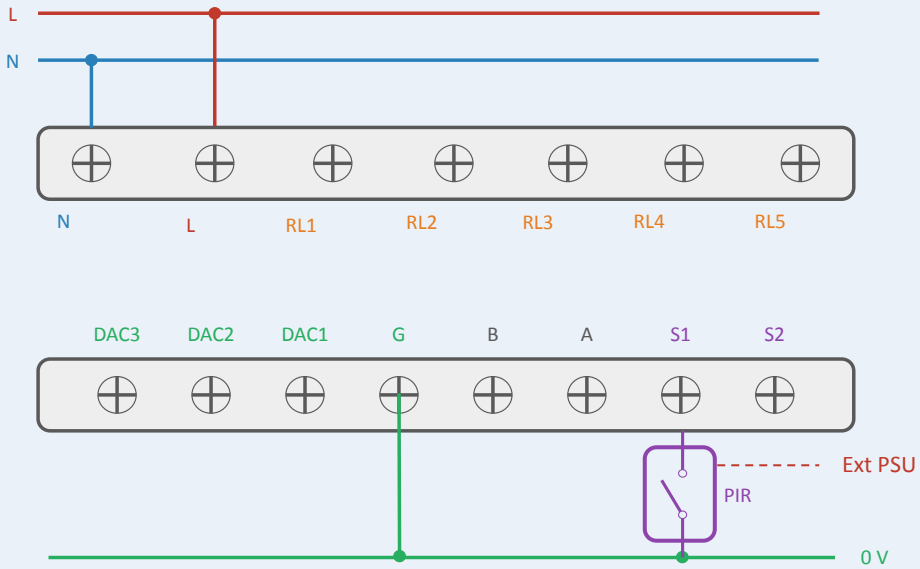

⚠️ **The PIR sensor requires an external power supply.** Refer to the PIR sensor's instructions to ensure proper galvanic isolation and safety when connecting it to the thermostat. The external PSU must be isolated from the thermostat's low-voltage zone.

AGRID

Fan Coil Thermostat — AGR25-01

Full manual: docs.a-grid.com/fan-coil/agr25-01
Support: support@a-grid.com

Manufacturer: Beijing Breeze Technology Co., Ltd.
Importer: AGRID SAS — 33 rue du Faubourg Saint-Antoine, 75011 Paris, France

SCAN ME
docs.a-grid.com/fan-coil/agr25-01