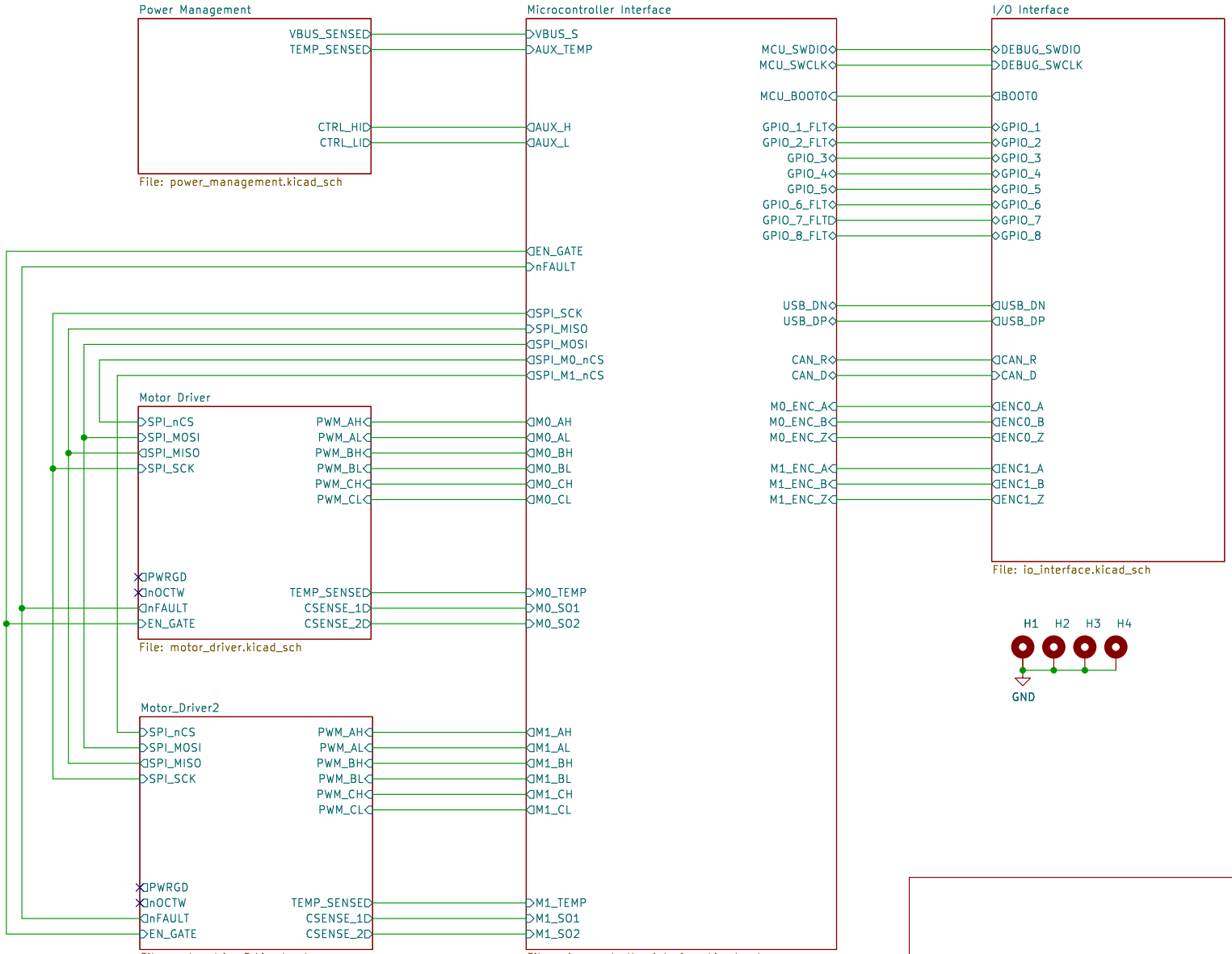

Dj140

Sheet: /

File: bldc_motor_cntroller.kicad_sch

Title: X_Odrive

Size: A4	Date: 2021-03-25	**Rev: 1.0.0**
KiCad E.D.A. 9.0.7		Id: 1/6

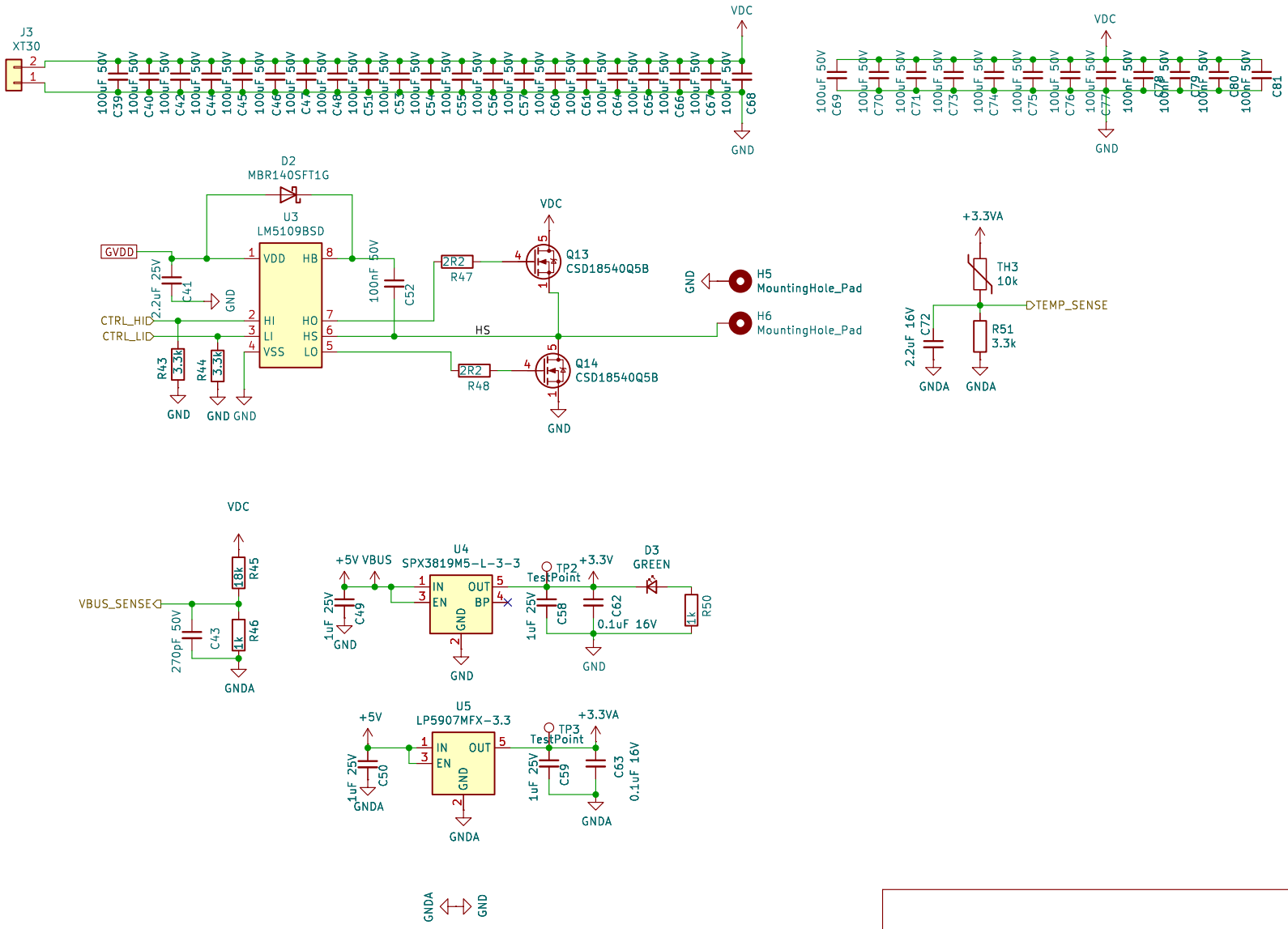

Dj140		
Sheet: /Power Management/		
File: power_management.kicad_sch		
Title: Power Management		
Size: A4	Date: 2021-03-25	**Rev: 1.0.0**
KiCad E.D.A. 9.0.7		Id: 2/6

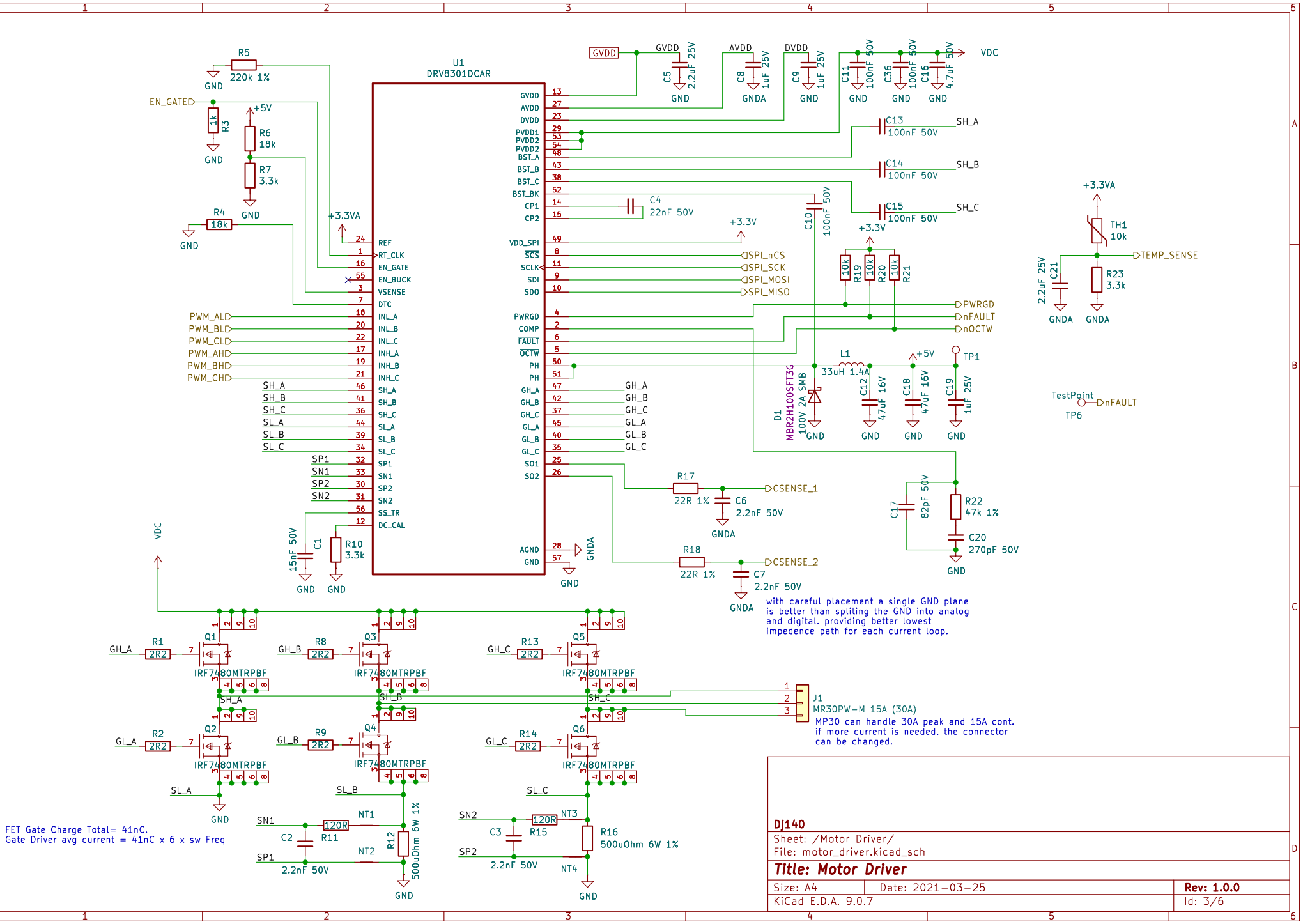
U1
DRV8301DCAR
GVDD
AVDD
DVDD
PVDD1
PVDD2
BST_A
BST_B
BST_C
BST_BK
CP1
CP2
VDD_SPI
SCS
SCLK
SDI
SDO
PWRGD
COMP
FAULT
OCTW
PH
GH_A
GH_B
GH_C
GL_A
GL_B
GL_C
SO1
SO2
AGND
GND
REF
RT_CLK
EN_GATE
EN_BUCK
VSENSE
DTC
INL_A
INL_B
INL_C
INH_A
INH_B
INH_C
SH_A
SH_B
SH_C
SL_A
SL_B
SL_C
SP1
SN1
SP2
SN2
SS_TR
DC_CAL
VDC
+3.3VA
+5V
+3.3V
GNDA
GND
EN_GATE
PWM_AL
PWM_BL
PWM_CL
PWM_AH
PWM_BH
PWM_CH
SPI_nCS
SPI_SCK
SPI_MOSI
SPI_MISO
PWRGD
nFAULT
nOCTW
TEMP_SENSE
TP1
TP6
TestPoint
CSENSE_1
CSENSE_2
R5 220k 1%
R3 1k
R6 18k
R7 3.3k
R4 18k
R10 3.3k
C1 15nF 50V
C5 2.2uF 25V
C8 1uF 25V
C9 1uF 25V
C11 100nF 50V
C36 100nF 50V
C16 4.7uF 50V
C13 100nF 50V
C14 100nF 50V
C15 100nF 50V
C4 22nF 50V
C10 100nF 50V
R19 10k
R20 10k
R21 10k
TH1 10k
R23 3.3k
C21 2.2uF 25V
L1 33uH 1.4A
D1 MBR2H100SFT3G 100V 2A SMB
C12 47uF 16V
C18 47uF 16V
C19 1uF 25V
R17 22R 1%
C6 2.2nF 50V
R18 22R 1%
C7 2.2nF 50V
C17 82pF 50V
R22 47k 1%
C20 270pF 50V
with careful placement a single GND plane is better than spliting the GND into analog and digital. providing better lowest impedence path for each current loop.
Q1 Q2 Q3 Q4 Q5 Q6
IRF7480MTRPBF
R1 2R2
R2 2R2
R8 2R2
R9 2R2
R13 2R2
R14 2R2
J1
MR30PW-M 15A (30A)
MP30 can handle 30A peak and 15A cont. if more current is needed, the connector can be changed.
FET Gate Charge Total= 41nC.
Gate Driver avg current = 41nC x 6 x sw Freq
R11 120R
R12 500uOhm 6W 1%
R15 120R
R16 500uOhm 6W 1%
C2 2.2nF 50V
C3 2.2nF 50V
NT1
NT2
NT3
NT4
Dj140
Sheet: /Motor Driver/
File: motor_driver.kicad_sch
Title: Motor Driver
Size: A4
Date: 2021-03-25
Rev: 1.0.0
KiCad E.D.A. 9.0.7
Id: 3/6

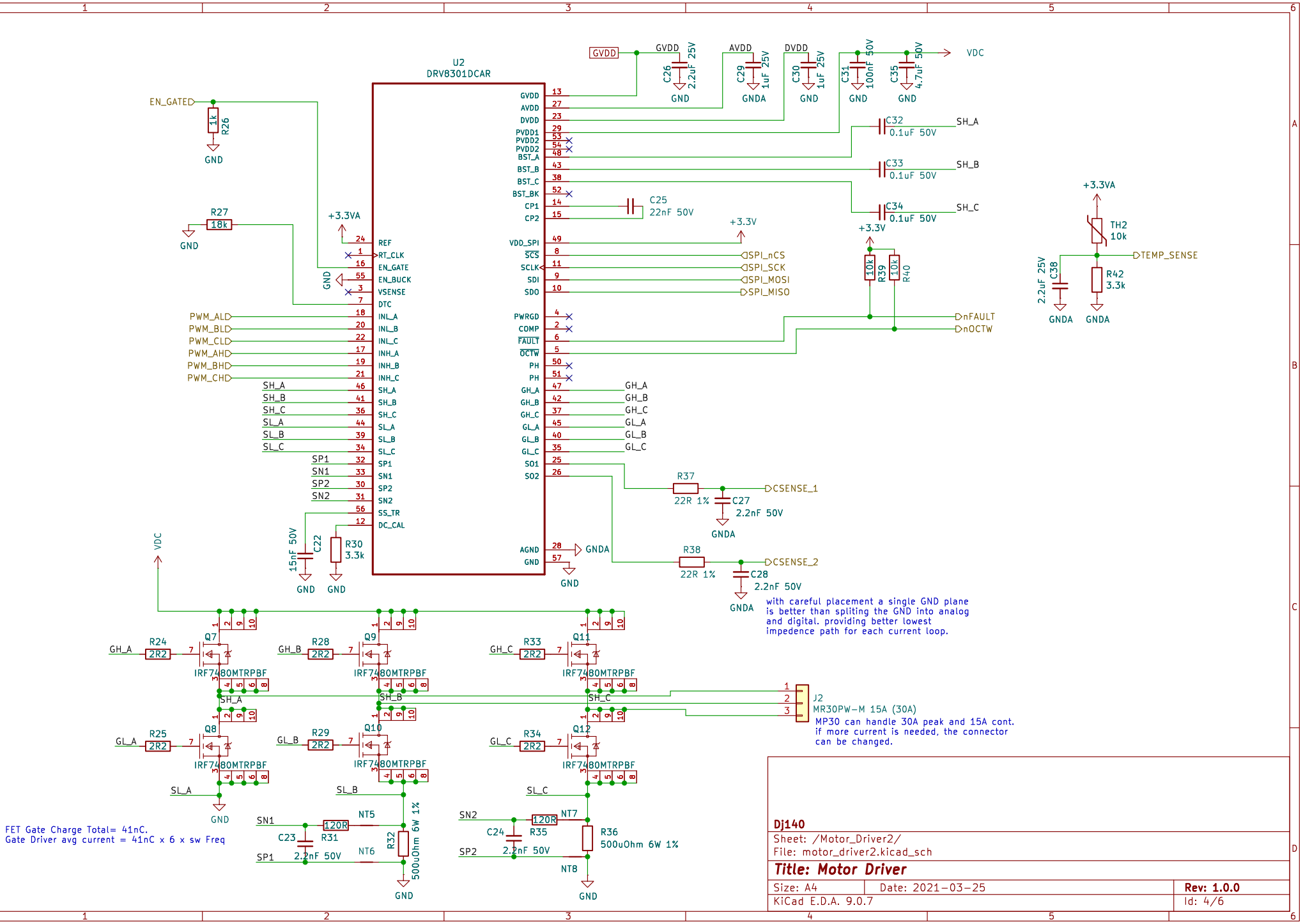
U2
DRV8301DCAR
GVDD
AVDD
DVDD
VDC
C26 2.2uF 25V
C29 1uF 25V
C30 1uF 25V
C31 100nF 50V
C35 4.7uF 50V
GND
GNDA
EN_GATE
R26 1k
R27 18k
+3.3VA
C25 22nF 50V
+3.3V
C32 0.1uF 50V
C33 0.1uF 50V
C34 0.1uF 50V
SH_A
SH_B
SH_C
TH2 10k
R42 3.3k
C38 2.2uF 25V
TEMP_SENSE
R39 10k
R40 10k
nFAULT
nOCTW
SPI_nCS
SPI_SCK
SPI_MOSI
SPI_MISO
PWM_ALD
PWM_BLD
PWM_CLD
PWM_AHD
PWM_BHD
PWM_CHD
R37 22R 1%
C27 2.2nF 50V
CSENSE_1
R38 22R 1%
C28 2.2nF 50V
CSENSE_2
C22 15nF 50V
R30 3.3k
with careful placement a single GND plane is better than spliting the GND into analog and digital. providing better lowest impedence path for each current loop.
Q7
Q8
Q9
Q10
Q11
Q12
IRF7480MTRPBF
R24 2R2
R25 2R2
R28 2R2
R29 2R2
R33 2R2
R34 2R2
J2
MR30PW-M 15A (30A)
MP30 can handle 30A peak and 15A cont. if more current is needed, the connector can be changed.
R31 120R
R32 500uOhm 6W 1%
R35 120R
R36 500uOhm 6W 1%
C23 2.2nF 50V
C24 2.2nF 50V
NT5
NT6
NT7
NT8
FET Gate Charge Total= 41nC.
Gate Driver avg current = 41nC x 6 x sw Freq
Dj140
Sheet: /Motor_Driver2/
File: motor_driver2.kicad_sch
Title: Motor Driver
Size: A4
Date: 2021-03-25
Rev: 1.0.0
KiCad E.D.A. 9.0.7
Id: 4/6

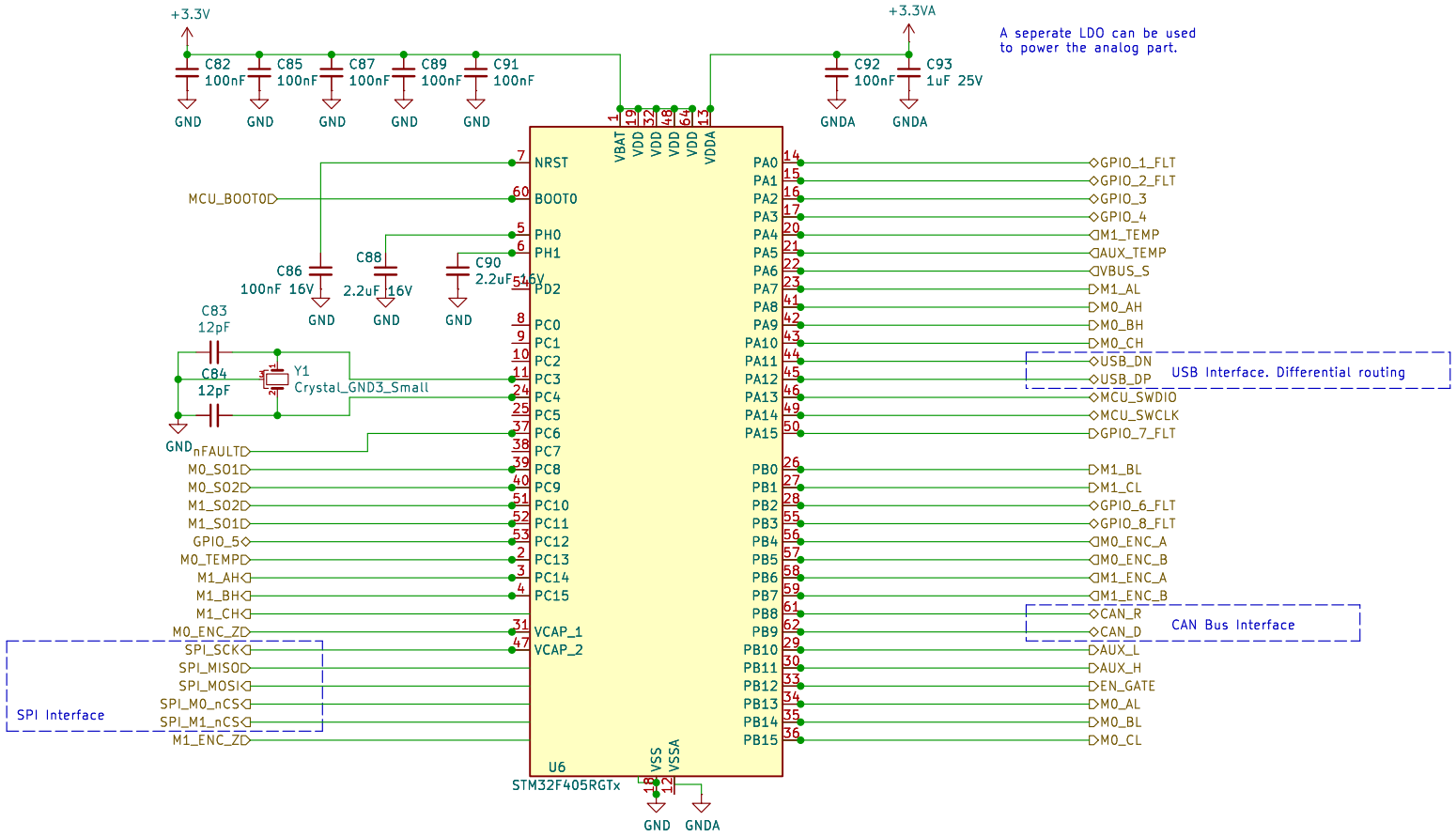

Dj140		
Sheet: /Microcontroller Interface/		
File: microcontroller_interface.kicad_sch		
Title: Microcontroller Interface		
Size: A4	Date: 2021-03-25	**Rev: 1.0.0**
KiCad E.D.A. 9.0.7		Id: 5/6

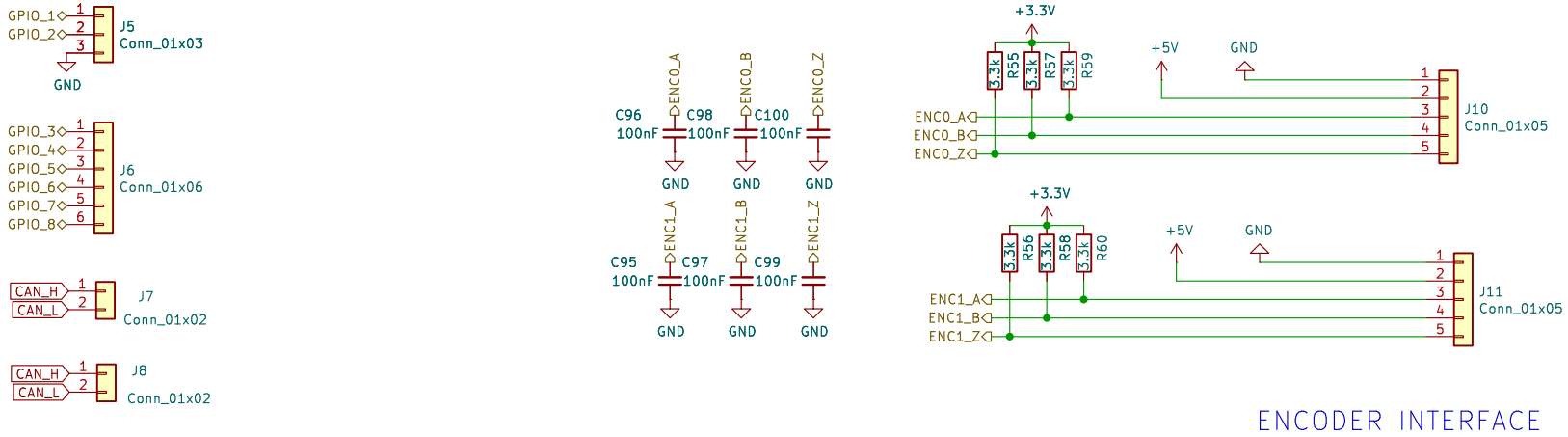

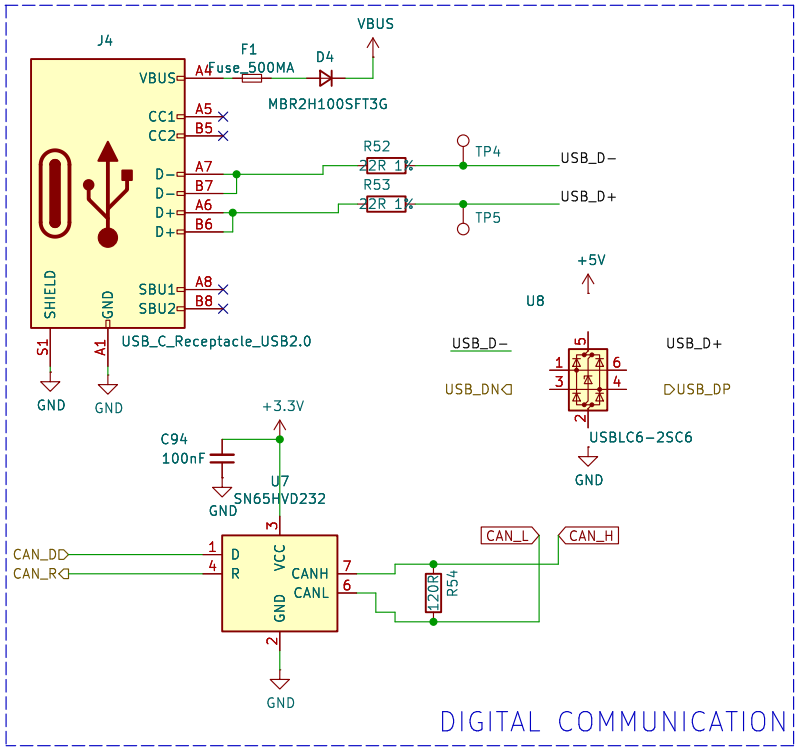

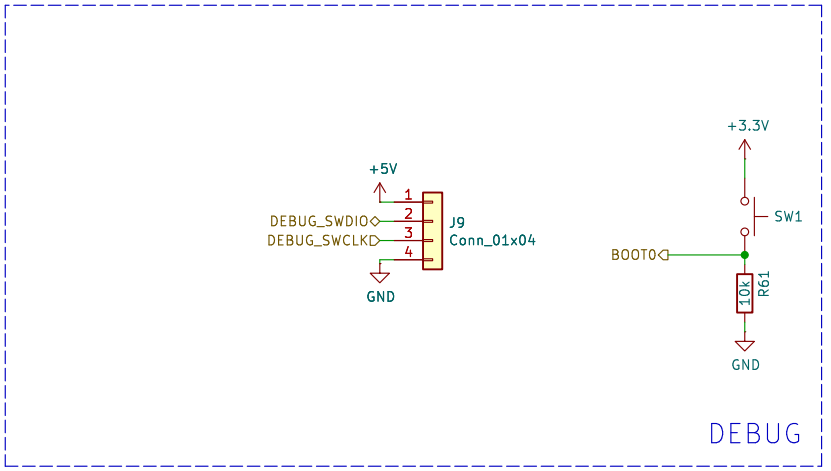

Dj140		
Sheet: /I/O Interface/		
File: io_interface.kicad_sch		
Title: I/O Interface		
Size: A4	Date: 2021-03-25	**Rev: 1.0.0**
KiCad E.D.A. 9.0.7		Id: 6/6