ITEM NO.	PART NUMBER	DESCRIPTION	QTY.
1	gimbal platform	Gimbal base platform 6160 Al alloy	1
2	outer ring	Gimbal outer ring 6060 Al alloy	1
3	ring_pin	Gimbal inner ring 6160 Al alloy	4
4	inner ring	Inner gimbal ring 6160 Al alloy	1
5	hotstick sleeve	Nylon sleeve inner ring gimbal	2
6	gimbal spacer	Nylon gimbal spacer	4

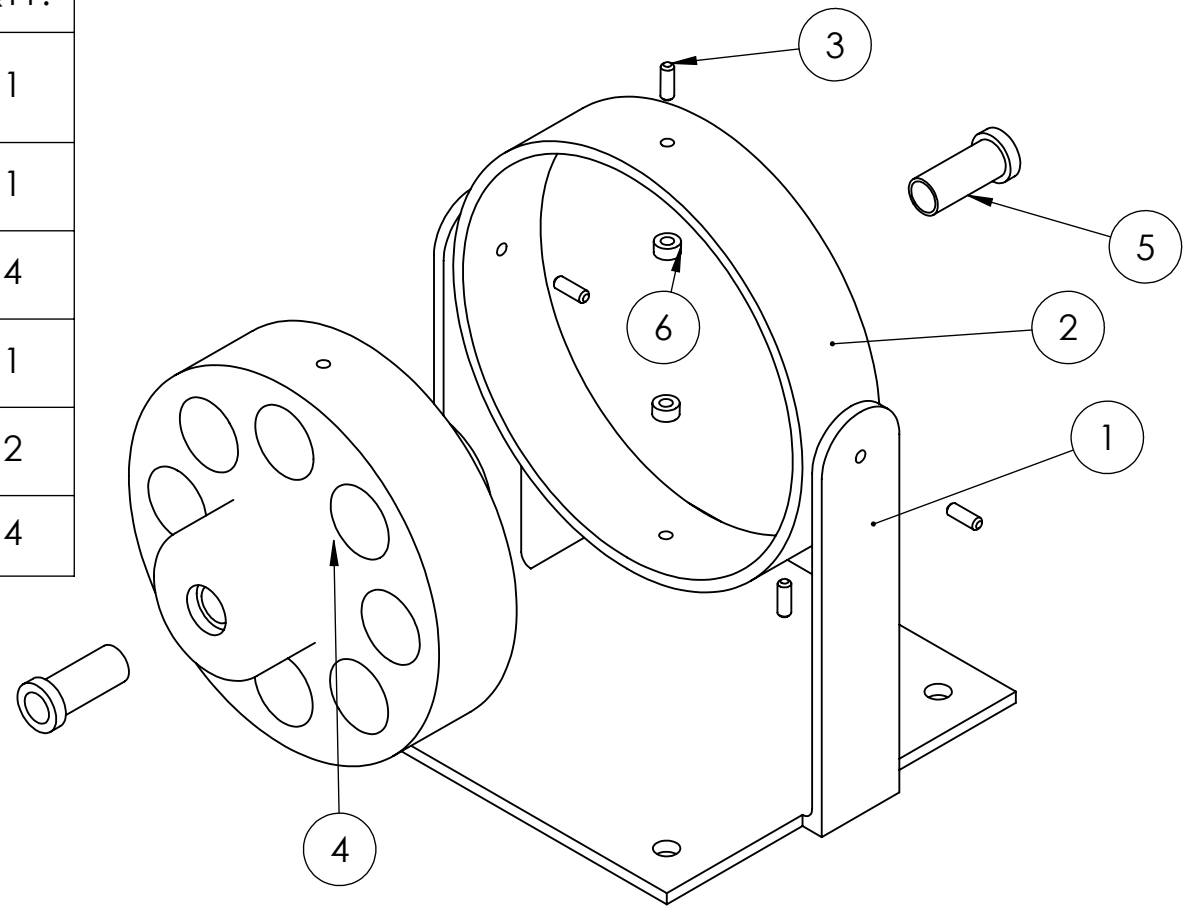

PROPRIETARY AND CONFIDENTIAL

THE INFORMATION CONTAINED IN THIS DRAWING IS THE PROPERTY OF <INSERT COMPANY NAME HERE>. ANY REPRODUCTION IN PART OR AS A WHOLE WITHOUT THE WRITTEN PERMISSION OF <INSERT COMPANY NAME HERE> IS PROHIBITED.

SolidWorks Student Edition.
For Academic Use Only.

NEXT ASSY | USED ON

APPLICATION

UNLESS OTHERWISE SPECIFIED:

DIMENSIONS ARE IN INCHES
TOLERANCES:
FRACTIONAL ±
ANGULAR: MACH ± BEND ±.01
TWO PLACE DECIMAL ±.01
THREE PLACE DECIMAL ±.005

INTERPRET GEOMETRIC TOLERANCING PER:

MATERIAL
6061 Alloy

FINISH

DO NOT SCALE DRAWING

	NAME	DATE
DRAWN		
CHECKED		
ENG APPR.		
MFG APPR.		
Q.A.		

COMMENTS:

TITLE:

SIZE **A** | DWG. NO. gimbal_assist_exploded | REV

SCALE: 1:7 | WEIGHT: | SHEET 1 OF 1

5 4 3 2 1