PEVA

XTX Evaluation Backplane

Rev. A.0

Content

Page 1	MAIN
Page 2	XTX Connector X1
Page 3	PCI Bus
Page 4	USB Bus and Sound
Page 5	PCI Post
Page 6	XTX Connector X2
Page 7	SATA
Page 8	PCI Express
Page 9	Express Card
Page 10	LPC Super IO
Page 11	LPC FWHs
Page 12	AC97
Page 13	XTX Connector X3
Page 14	VGA TV
Page 15	LPT COM FLPY MB MS
Page 16	LCD
Page 17	XTX Connector X4
Page 18	IDE and Ethernet
Page 19	PWR BATT SPK Feature FAN
Page 20	DCDC 3.3V
Page 21	Revision History

Variants

Base	Components used on all options

isolated frame GND for 1.5V DCDC
page 10
GNDDC1V5

isolated frame GND for 3.3V SB DCDC
page 8
GNDDC3VS

isolated frame GND for connectors
SHLDGND

isolated frame GND for 3.3V DCDC
page 19
DCGND

isolated frame GND for Audio codec
page 12
GND_EC

P1
PPEVALA0

M14 MPIL_KFE-2,6-3
M15 MPIL_KFE-2,6-3
M16 MPIL_KFE-2,6-3
M17 MPIL_KFE-2,6-3

BM1 Fudicial
BM2 Fudicial
BM3 Fudicial
BM4 Fudicial

M6 Mounting Hole 8.2x4.2mm
M7 Mounting Hole 8.2x4.2mm
M11 Mounting Hole 8.2x4.2mm
M10 Mounting Hole 8.2x4.2mm
M24 Mounting Hole 7.0x4.0mm(XDVI)
M25 Mounting Hole 7.0x4.0mm(XDVI)

M26 GND-PROBE
M27 GND-PROBE
M28 GND-PROBE
M29 GND-PROBE

Congatec AG
Auwiesenstrasse 5
D-94469 Deggendorf
Germany

congatec
the rhythm of embedded computing

Title: PEVA - XTX pro Evaluation Backplane			
Size: B	Document Number: PEVASA0	Created	Rev: A.0
Date: Wednesday, April 05, 2006	Sheet 1 of 21		

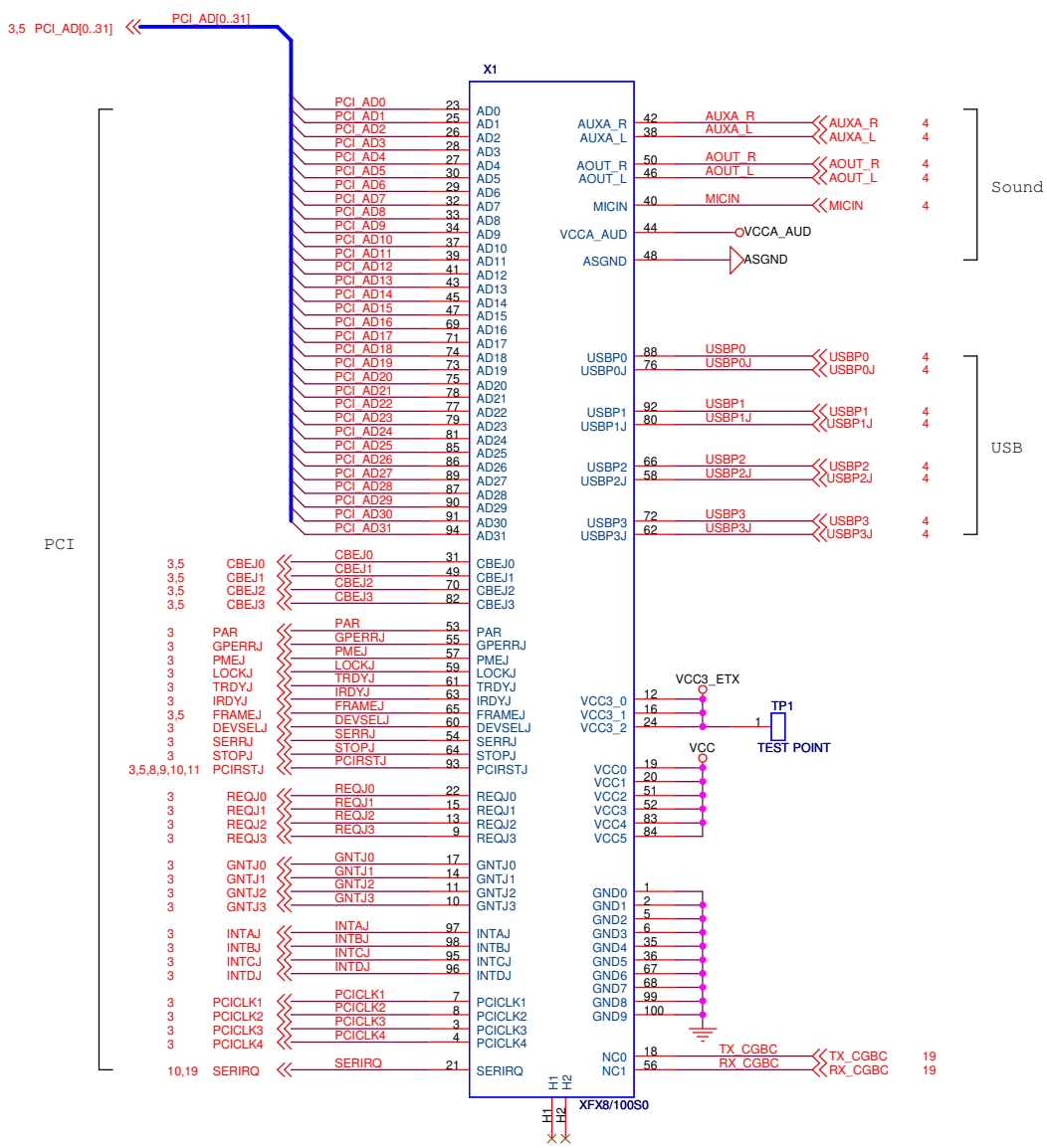

ETX Connector X1

PCI Bus / Sound / USB

Congatec AG Auwiesenstrasse 5 D-94469 Deggendorf Germany	congatec the rhythm of embedded computing
Title: XTX Connector X1	
Size: B	Document Number: PEVASA0
Created	
Rev: A.0	
Date: Wednesday, April 05, 2006	Sheet 2 of 21

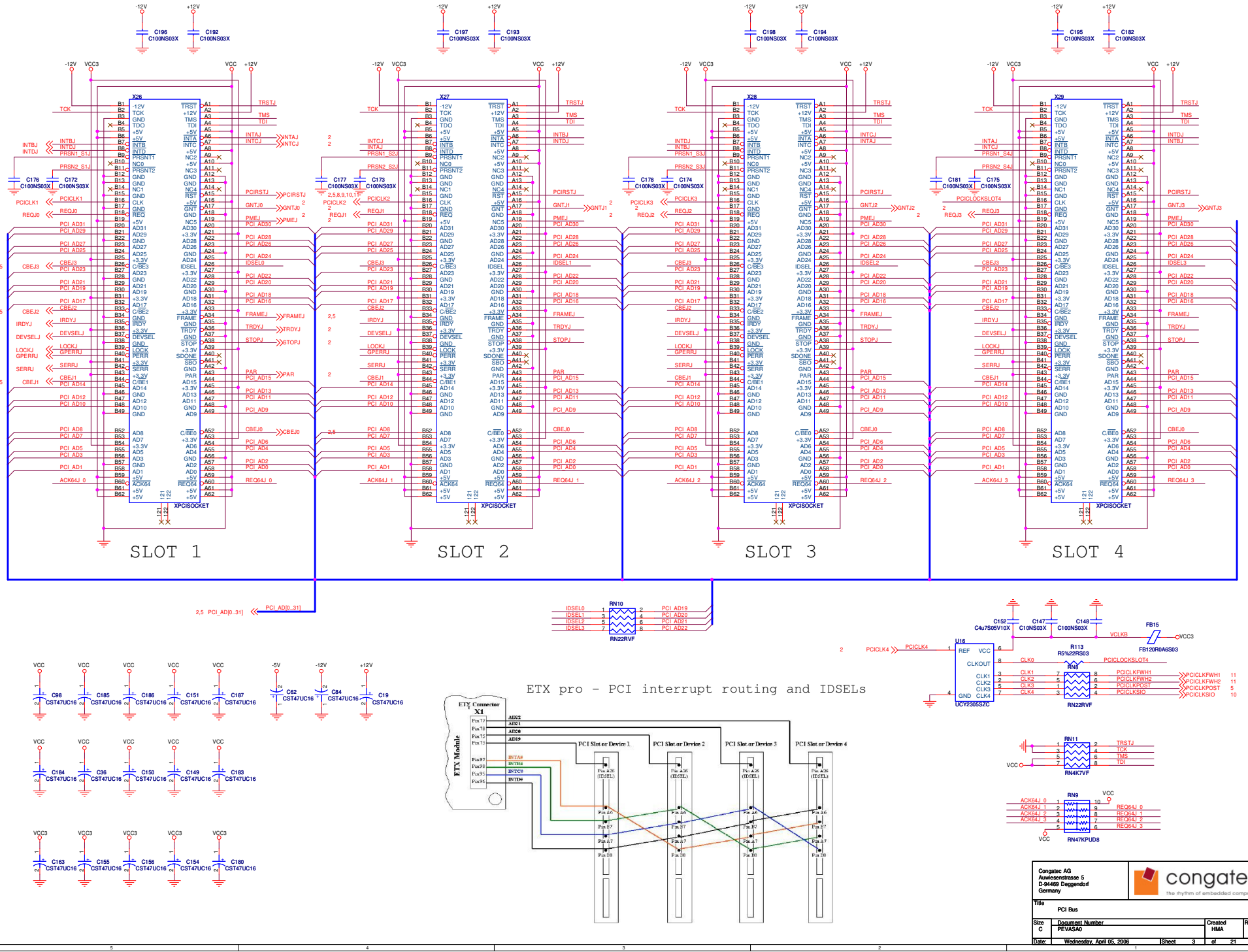
SLOT 1
SLOT 2
SLOT 3
SLOT 4
ETX pro - PCI interrupt routing and IDSELs
ETX Connector X1
ETX Module
PCI Slot or Device 1
PCI Slot or Device 2
PCI Slot or Device 3
PCI Slot or Device 4
Congatec AG
Auwiesenstrasse 5
D-84469 Deggendorf
Germany
PCI Bus
PEVASA0
Wednesday, April 05, 2006

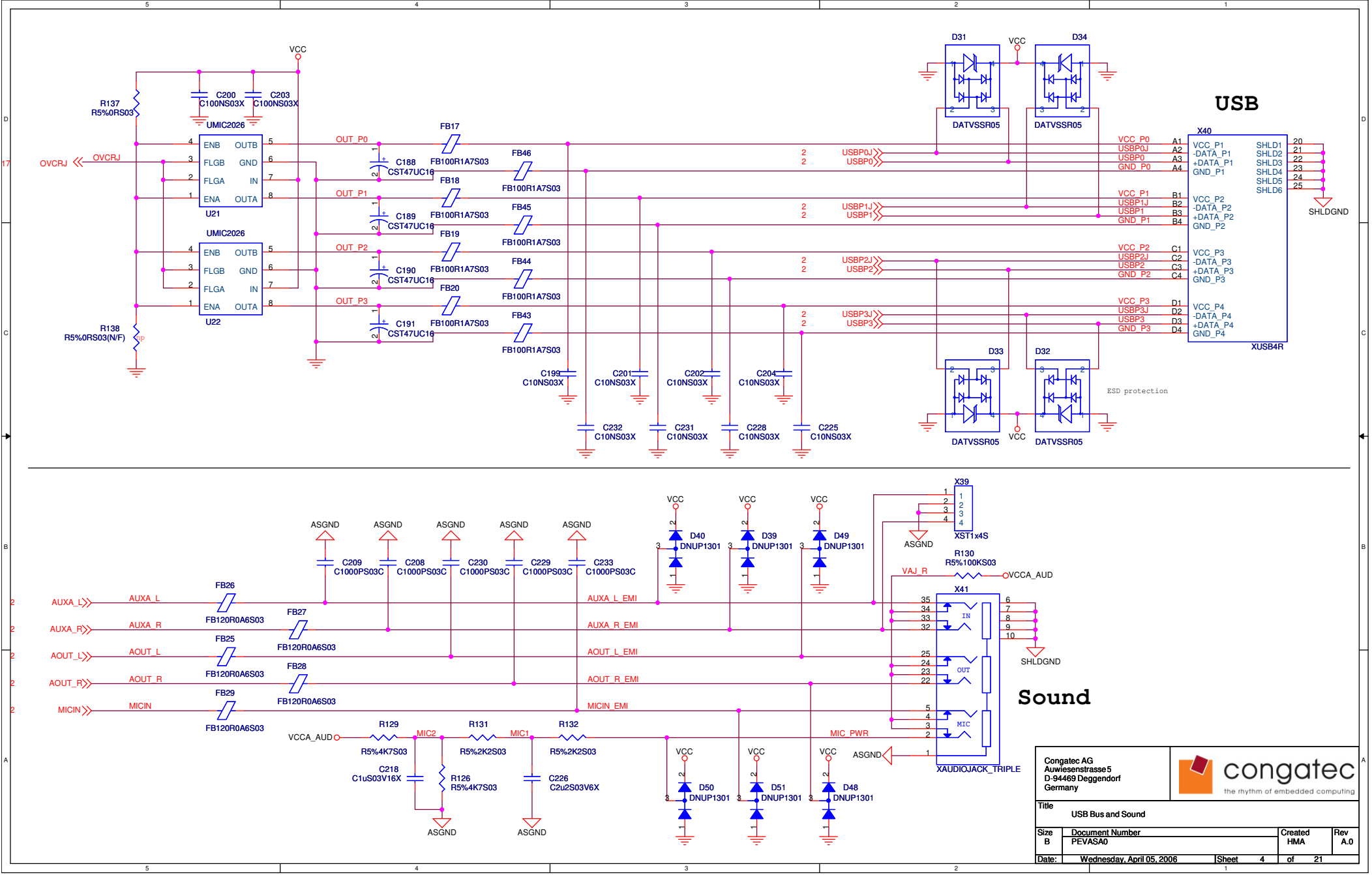

Congatec AG Auwiesenstrasse 5 D-94469 Deggendorf Germany			
Title: USB Bus and Sound			
Size: B	Document Number: PEVASA0	Created: HMA	Rev: A.0
Date: Wednesday, April 05, 2006	Sheet 4 of 21		

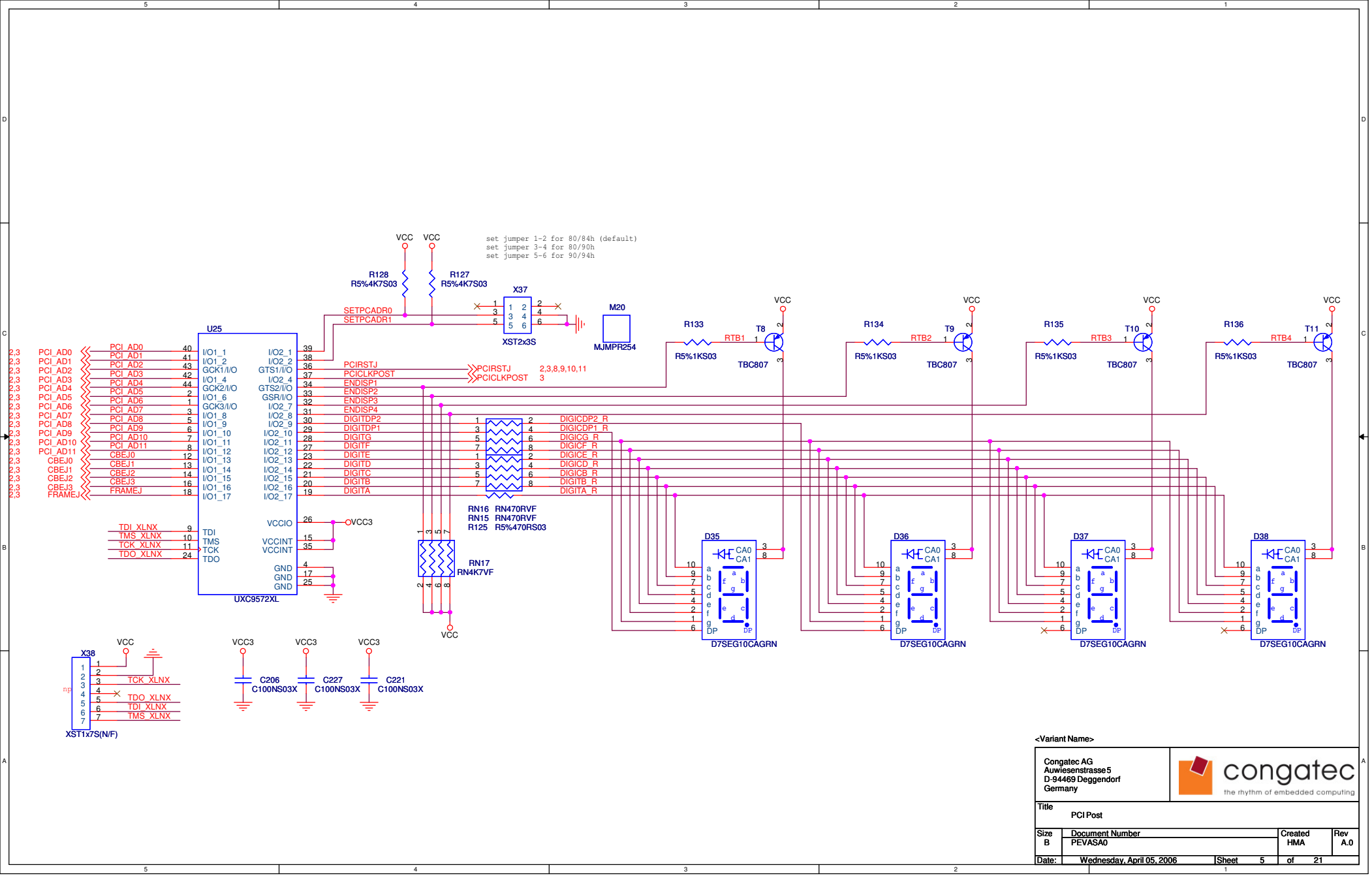

<Variant Name>

Congatec AG Auwiesenstrasse 5 D-94469 Deggendorf Germany	congatec the rhythm of embedded computing		
Title: PCI Post			
Size: B	Document Number: PEVASA0	Created: HMA	Rev: A.0
Date: Wednesday, April 05, 2006	Sheet 5 of 21		

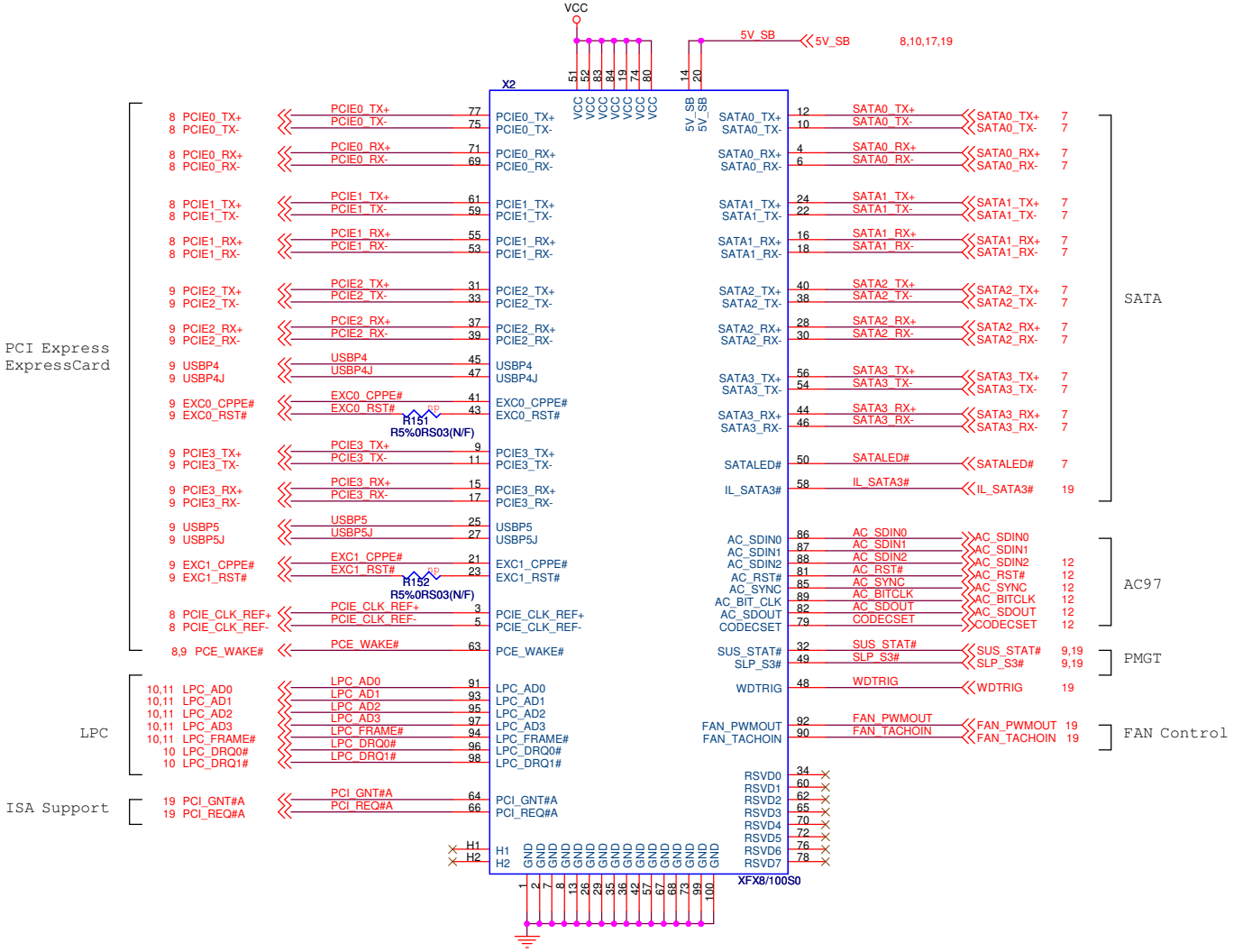

XTX Connector X2

PCI Express / SATA / AC97 / LPC

Congatec AG Auwiesenstrasse 5 D-94469 Deggendorf Germany		congatec the rhythm of embedded computing	
Title: XTX Connector X2			
Size: B	Document Number: PEVASA0	Created: HMA	Rev: A.0
Date: Wednesday, April 05, 2006	Sheet 6 of 21		

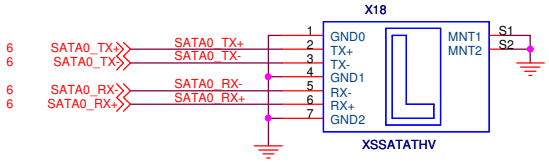

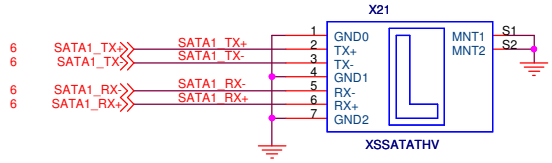

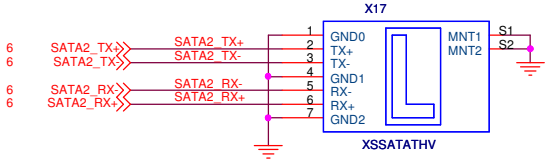

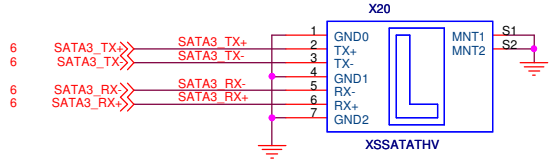

Congatec AG Auwiesenstrasse 5 D-94469 Deggendorf Germany			
Title: SATA			
Size: B	Document Number: PEVASA0	Created: HMA	Rev: A.0
Date: Wednesday, April 05, 2006	Sheet 7 of 21		

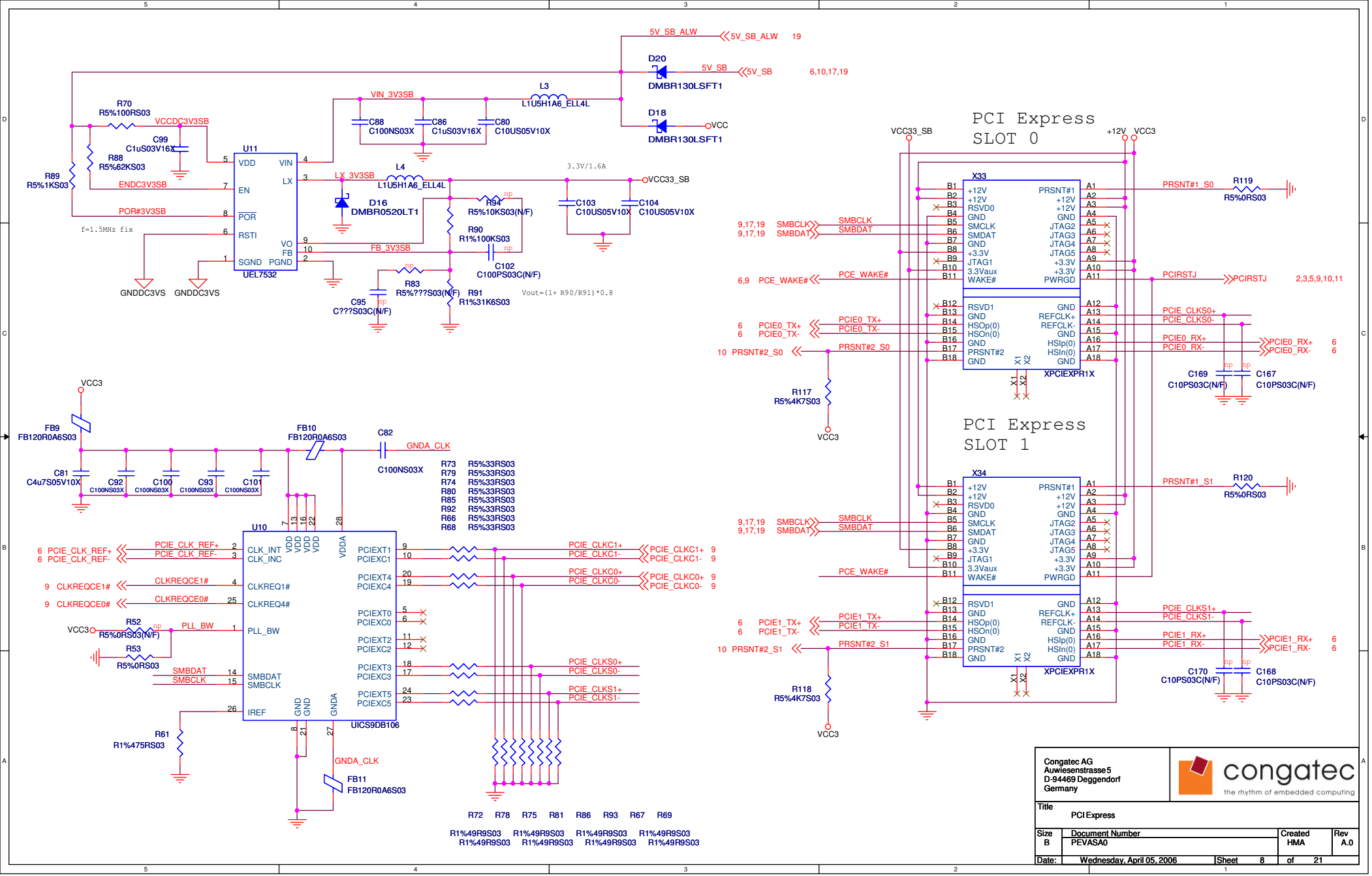
PCI Express
SLOT 0
PCI Express
SLOT 1
X33
X34
XPCIEXPR1X
U11
UEL7532
U10
UICS9DB106
5V_SB_ALW
5V_SB
VCC
VCC33_SB
VCC3
+12V
D20
DMBR130LSFT1
D18
DMBR130LSFT1
L3
L1U5H1A6_ELL4L
L4
L1U5H1A6_ELL4L
D16
DMBR0520LT1
VIN_3V3SB
LX_3V3SB
FB_3V3SB
3.3V/1.6A
Vout=(1+ R90/R91)*0.8
f=1.5MHz fix
R70 R5%100RS03
R88 R5%62KS03
R89 R5%1KS03
R90 R1%100KS03
R91 R1%31K6S03
R94 R5%10KS03(N/F)
R83 R5%???S03(N/F)
C99 C1uS03V16X
C88 C100NS03X
C86 C1uS03V16X
C80 C10US05V10X
C103 C10US05V10X
C104 C10US05V10X
C102 C100PS03C(N/F)
C95 C???S03C(N/F)
ENDC3V3SB
POR#3V3SB
GNDDC3VS
FB9 FB120R0A6S03
FB10 FB120R0A6S03
FB11 FB120R0A6S03
C81 C4u7S05V10X
C82 C100NS03X
GNDA_CLK
R52 R5%0RS03(N/F)
R53 R5%0RS03
R61 R1%475RS03
R117 R5%4K7S03
R118 R5%4K7S03
R119 R5%0RS03
R120 R5%0RS03
C169 C10PS03C(N/F)
C167 C10PS03C(N/F)
C170 C10PS03C(N/F)
C168 C10PS03C(N/F)
PRSNT#1_S0
PRSNT#2_S0
PRSNT#1_S1
PRSNT#2_S1
PCE_WAKE#
PCIRSTJ
SMBCLK
SMBDAT
PCIE_CLKS0+
PCIE_CLKS0-
PCIE_CLKS1+
PCIE_CLKS1-
PCIE_CLKC0+
PCIE_CLKC0-
PCIE_CLKC1+
PCIE_CLKC1-
PCIE_CLK_REF+
PCIE_CLK_REF-
CLKREQCE0#
CLKREQCE1#
PLL_BW
R73 R5%33RS03
R79 R5%33RS03
R74 R5%33RS03
R80 R5%33RS03
R85 R5%33RS03
R92 R5%33RS03
R66 R5%33RS03
R68 R5%33RS03
R72 R78 R75 R81 R86 R93 R67 R69
R1%49R9S03
Congatec AG
Auwiesenstrasse 5
D-94469 Deggendorf
Germany
congatec
the rhythm of embedded computing
Title
PCI Express
Size B
Document Number PEVASA0
Created HMA
Rev A.0
Date: Wednesday, April 05, 2006
Sheet 8 of 21

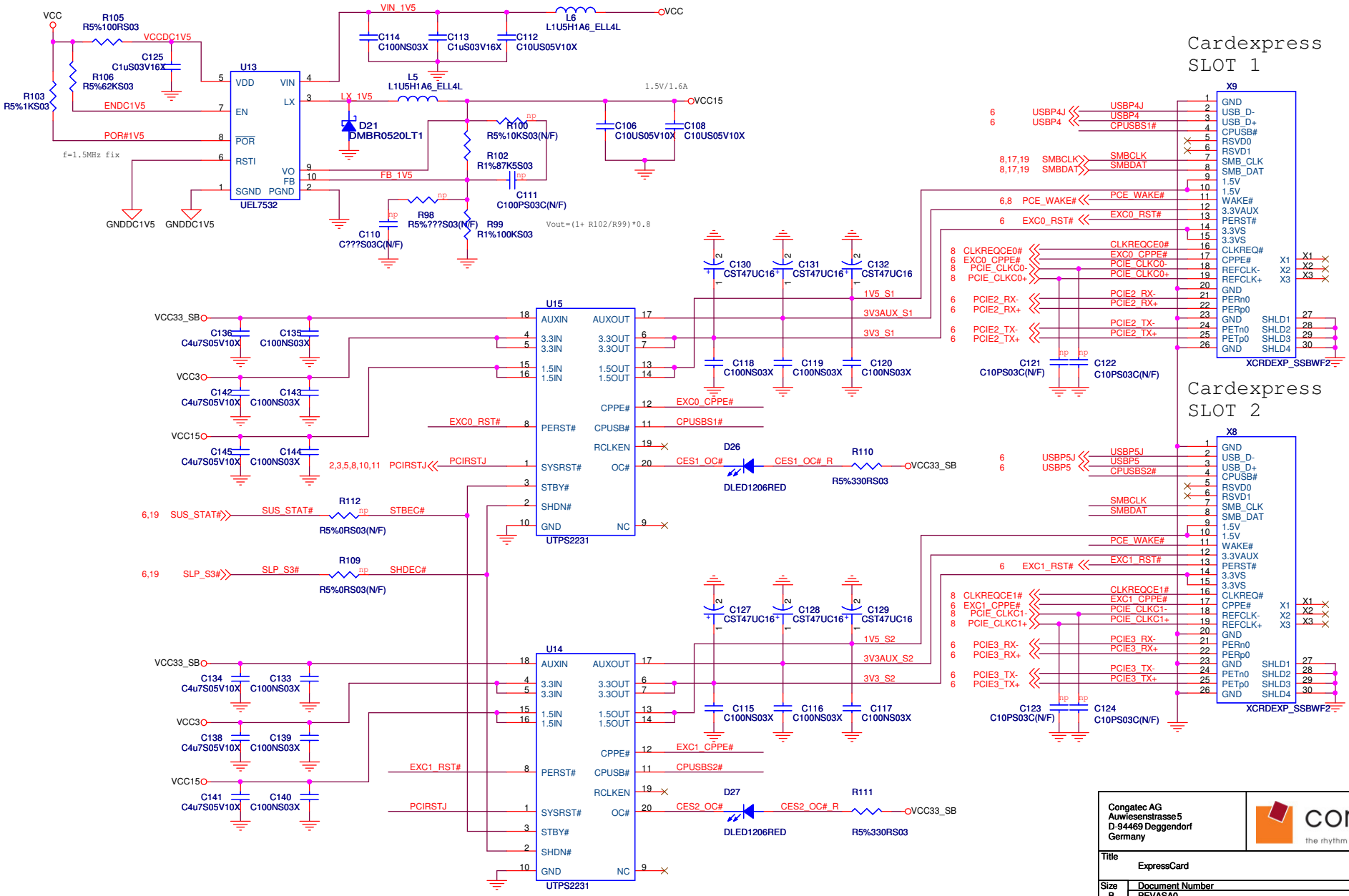
Cardexpress
SLOT 1
Cardexpress
SLOT 2
U13
UEL7532
U15
UTPS2231
U14
UTPS2231
X9
X8
XCRDEXP_SSBWF2
VCC
VCCDC1V5
ENDC1V5
POR#1V5
VIN_1V5
LX_1V5
FB_1V5
VCC15
1.5V/1.6A
f=1.5MHz fix
Vout=(1+ R102/R99)*0.8
GNDDC1V5
D21
DMBR0520LT1
D26
D27
DLED1206RED
R105
R5%100RS03
R106
R5%62KS03
R103
R5%1KS03
R100
R5%10KS03(N/F)
R102
R1%87K5S03
R98
R5%???S03(N/F)
R99
R1%100KS03
R110
R111
R5%330RS03
R112
R109
R5%0RS03(N/F)
L6
L1U5H1A6_ELL4L
L5
L1U5H1A6_ELL4L
C114
C100NS03X
C113
C1uS03V16X
C112
C10US05V10X
C125
C1uS03V16X
C106
C10US05V10X
C108
C10US05V10X
C111
C100PS03C(N/F)
C110
C???S03C(N/F)
C130
CST47UC16
C131
CST47UC16
C132
CST47UC16
C118
C100NS03X
C119
C100NS03X
C120
C100NS03X
C121
C10PS03C(N/F)
C122
C10PS03C(N/F)
C127
CST47UC16
C128
CST47UC16
C129
CST47UC16
C115
C100NS03X
C116
C100NS03X
C117
C100NS03X
C123
C10PS03C(N/F)
C124
C10PS03C(N/F)
C136
C4u7S05V10X
C135
C100NS03X
C142
C4u7S05V10X
C143
C100NS03X
C145
C4u7S05V10X
C144
C100NS03X
C134
C4u7S05V10X
C133
C100NS03X
C138
C4u7S05V10X
C139
C100NS03X
C141
C4u7S05V10X
C140
C100NS03X
VCC33_SB
VCC3
VCC15
1V5_S1
3V3AUX_S1
3V3_S1
1V5_S2
3V3AUX_S2
3V3_S2
EXC0_RST#
EXC1_RST#
EXC0_CPPE#
EXC1_CPPE#
CPUSBS1#
CPUSBS2#
PCIRSTJ
CES1_OC#
CES2_OC#
CES1_OC#_R
CES2_OC#_R
SUS_STAT#
STBEC#
SLP_S3#
SHDEC#
USBP4J
USBP4
CPUSBS1#
USBP5J
USBP5
CPUSBS2#
SMBCLK
SMBDAT
PCE_WAKE#
CLKREQCE0#
EXC0_CPPE#
PCIE_CLKC0-
PCIE_CLKC0+
PCIE2_RX-
PCIE2_RX+
PCIE2_TX-
PCIE2_TX+
CLKREQCE1#
EXC1_CPPE#
PCIE_CLKC1-
PCIE_CLKC1+
PCIE3_RX-
PCIE3_RX+
PCIE3_TX-
PCIE3_TX+
Congatec AG
Auwiesenstrasse 5
D-94469 Deggendorf
Germany
congatec
the rhythm of embedded computing
Title
ExpressCard
Size
B
Document Number
PEVASA0
Created
HMA
Rev
A.0
Date:
Wednesday, April 05, 2006
Sheet
9
of
21

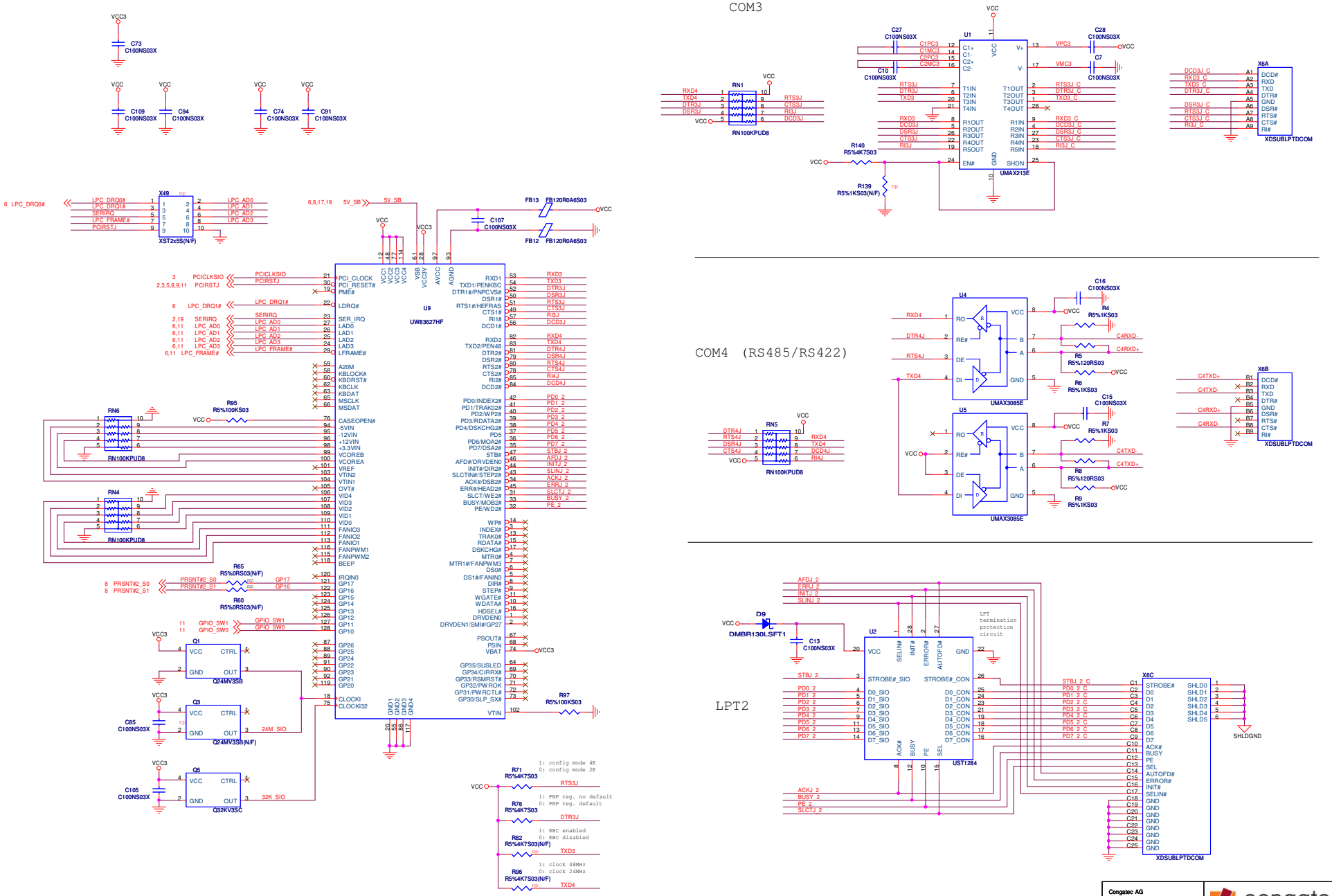

Congatec AG
Auwiesenstrasse 5
D-94469 Deggendorf
Germany

congatec
the rhythm of embedded computing

Title	LPC Super IO		
Size C	Document Number PEVASA0	Created HMA	Rev A.0
Date: Wednesday, April 05, 2006	Sheet 10	of 21	

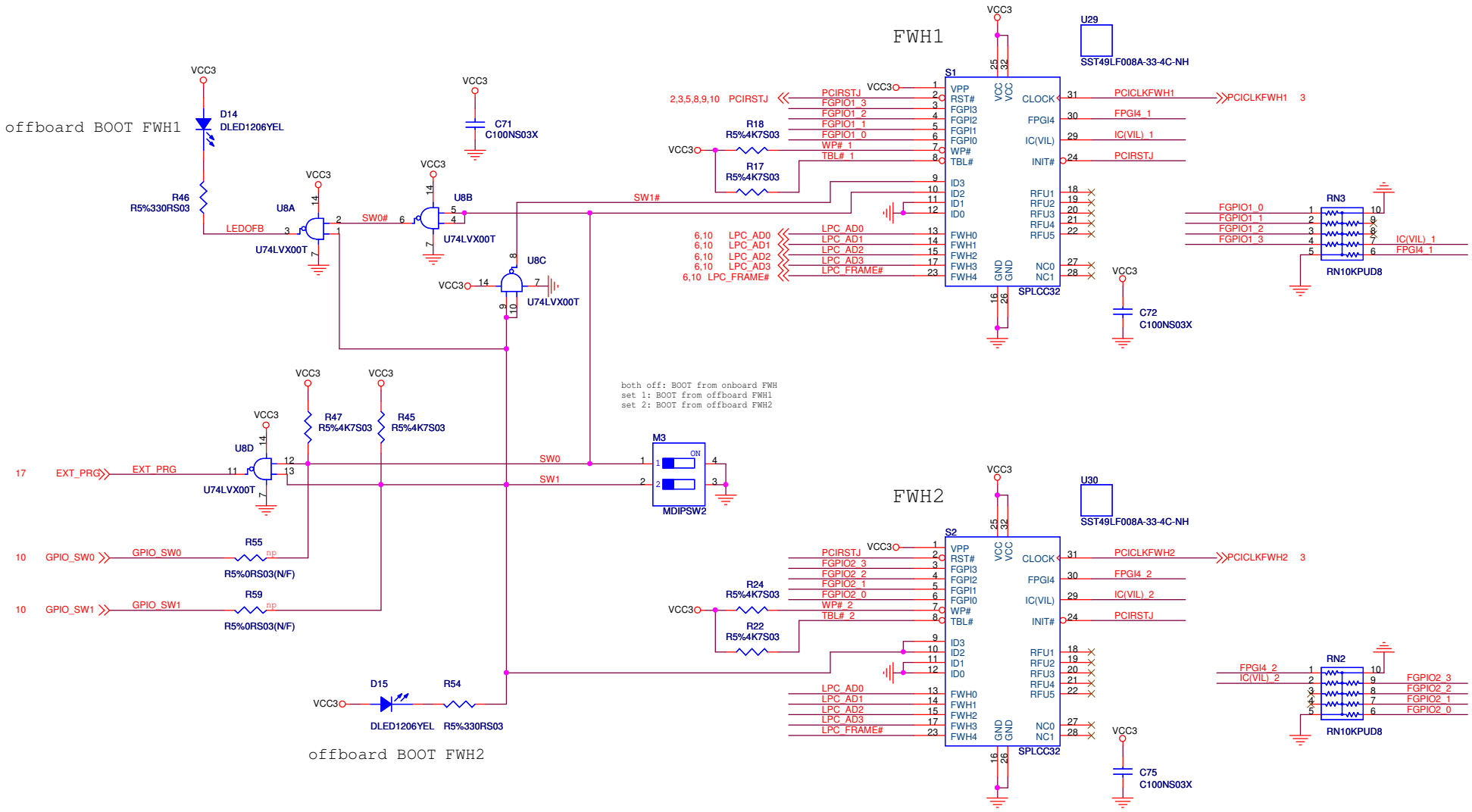

Congatec AG Auwiesenstrasse 5 D-94469 Deggendorf Germany	congatec the rhythm of embedded computing	
Title: LPC FWHs		
Size: B	Document Number: PEVASA0	Created: HMA / Rev: A.0
Date: Wednesday, April 05, 2006	Sheet 11 of 21	

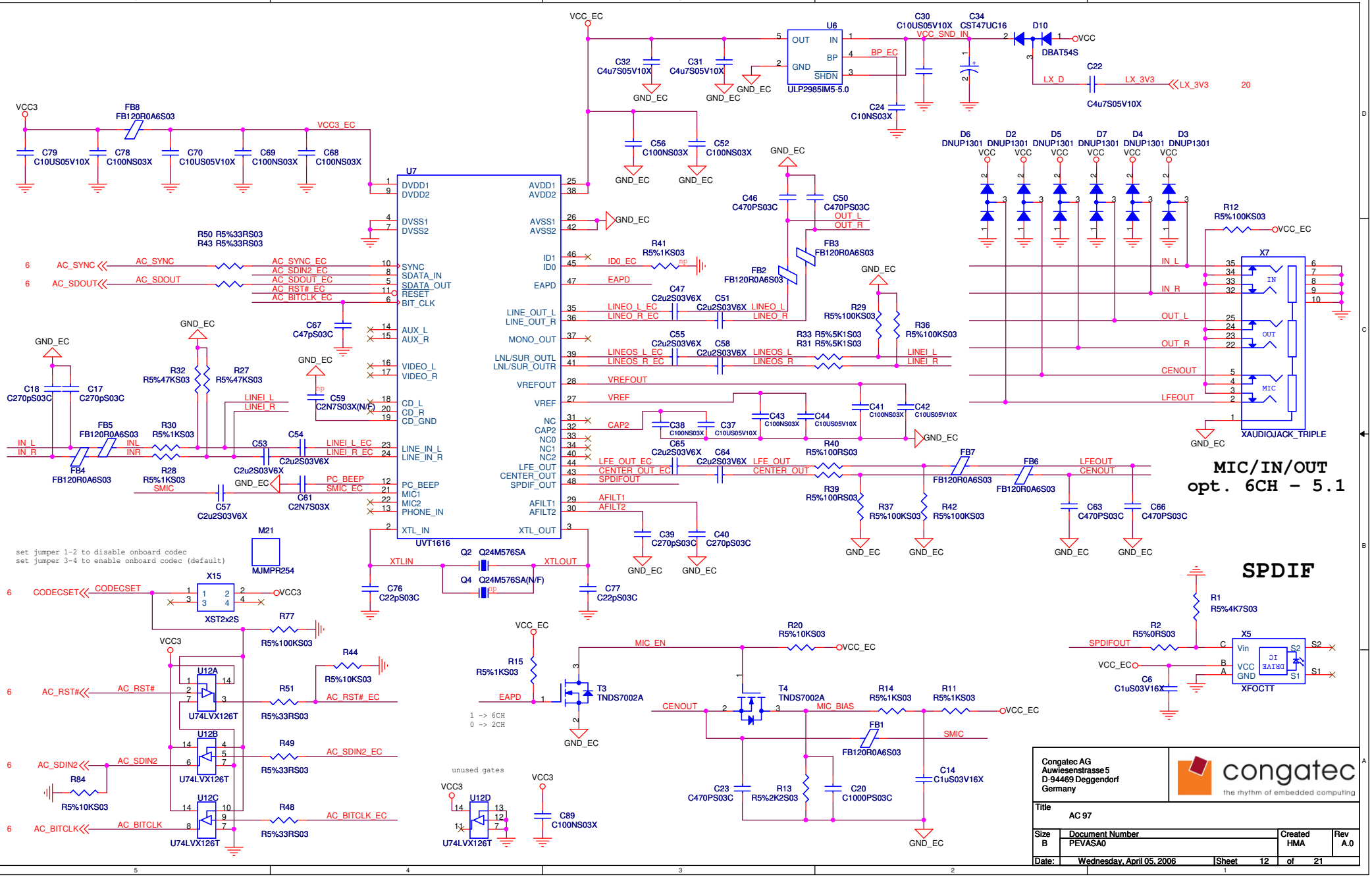
MIC/IN/OUT
opt. 6CH - 5.1
SPDIF
U7
UVT1616
U6
ULP2985IM5-5.0
X7
XAUDIOJACK_TRIPLE
X15
XST2x2S
M21
MJMPR254
Q2 Q24M576SA
Q4 Q24M576SA(N/F)
X5
XFOCTT
U12A
U12B
U12C
U12D
U74LVX126T
T3 TNDS7002A
T4 TNDS7002A
set jumper 1-2 to disable onboard codec
set jumper 3-4 to enable onboard codec (default)
1 -> 6CH
0 -> 2CH
unused gates
Congatec AG
Auwiesenstrasse 5
D-94469 Deggendorf
Germany
the rhythm of embedded computing
Title
AC 97
Size B
Document Number PEVASA0
Created HMA
Rev A.0
Date: Wednesday, April 05, 2006
Sheet 12 of 21

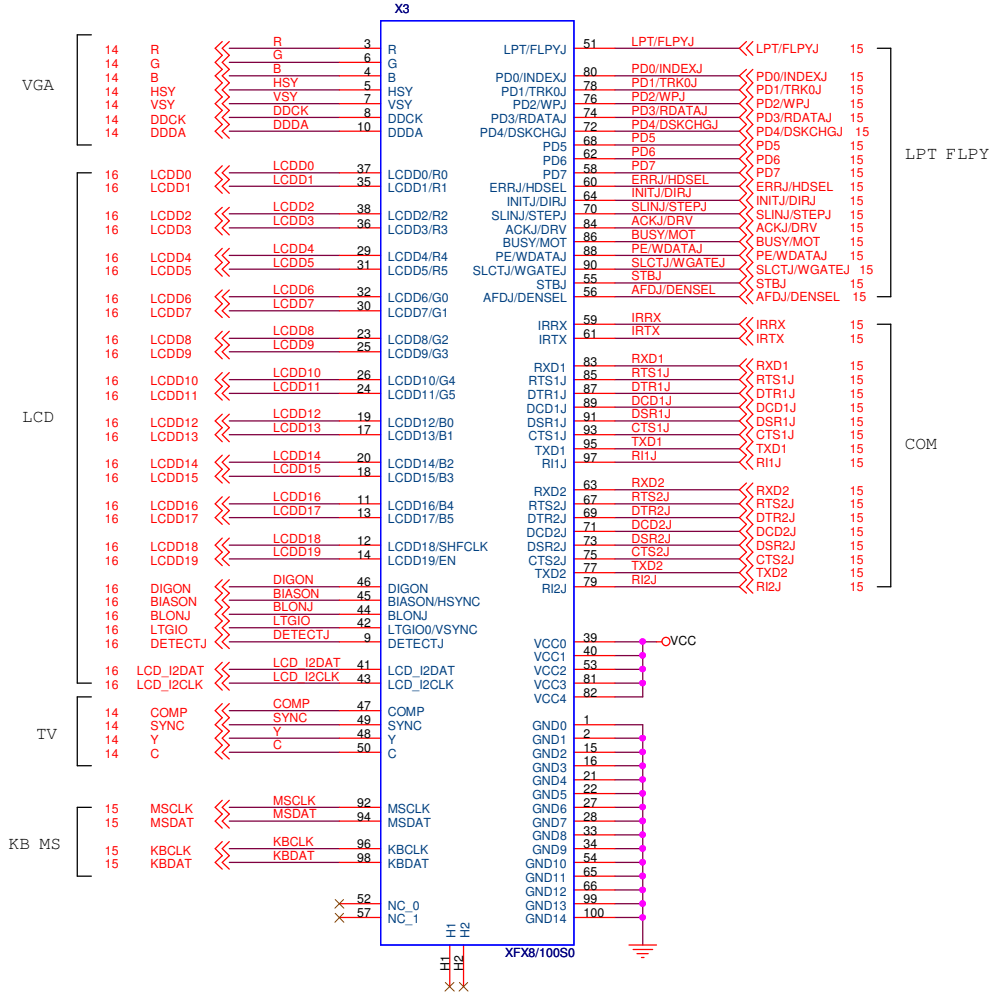

ETX Connector X3

VGA LCD TV / LPT COM / FLPY / KB MS

Congatec AG Auwiesenstrasse 5 D-94469 Deggendorf Germany	congatec the rhythm of embedded computing
Title: XTX Connector X3	
Size: B	Document Number: PEVASA0
Created: HMA	Rev: A.0
Date: Wednesday, April 05, 2006	Sheet 13 of 21

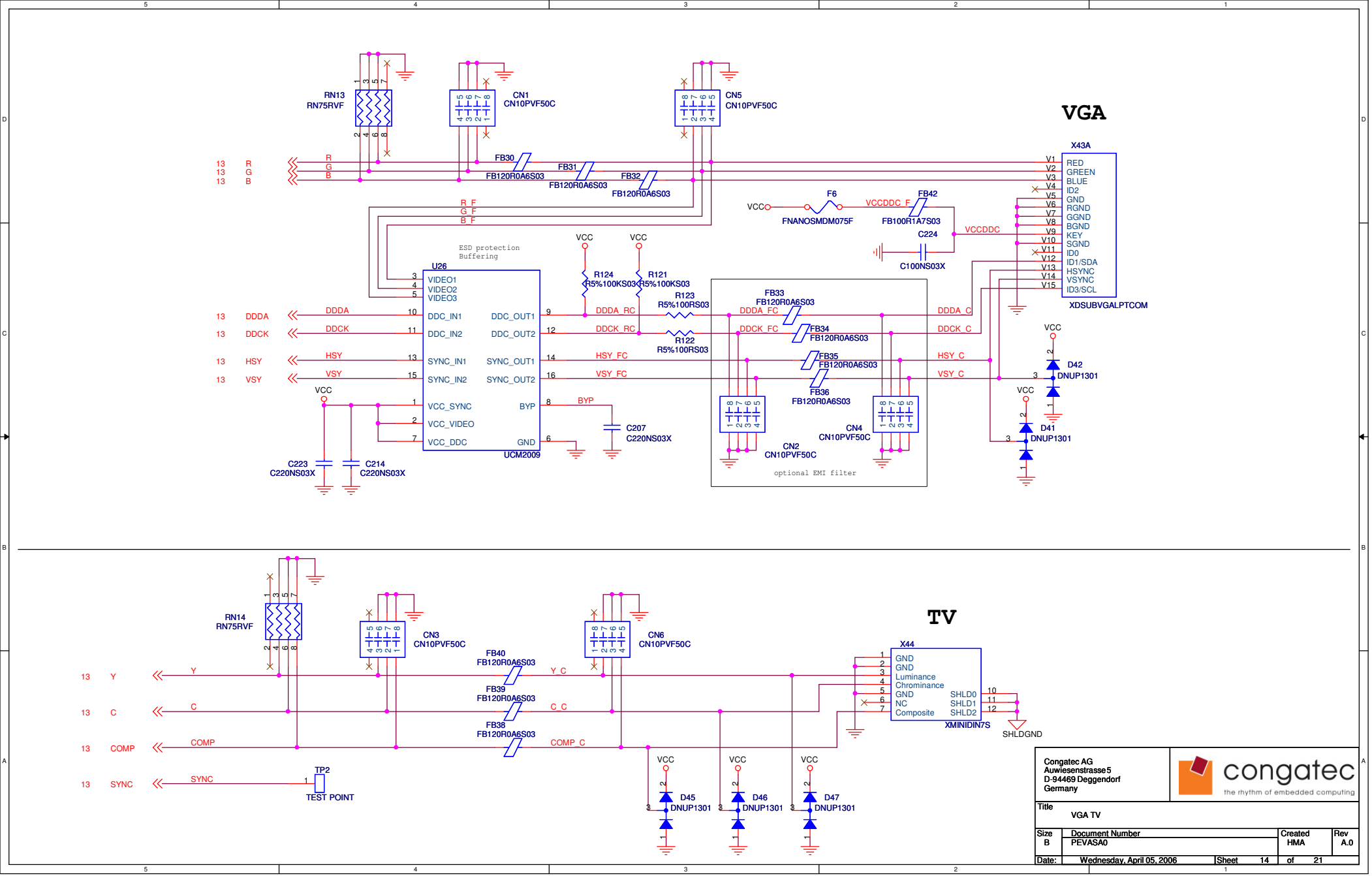
VGA
RN13
RN75RVF
CN1
CN10PVF50C
CN5
CN10PVF50C
X43A
RED
GREEN
BLUE
ID2
GND
RGND
GGND
BGND
KEY
SGND
ID0
ID1/SDA
HSYNC
VSYNC
ID3/SCL
XDSUBVGALPTCOM
FB30
FB120R0A6S03
FB31
FB120R0A6S03
FB32
FB120R0A6S03
F6
FNANOSMDM075F
FB42
FB100R1A7S03
C224
C100NS03X
VCCDDC
VCCDDC_F
ESD protection
Buffering
U26
VIDEO1
VIDEO2
VIDEO3
DDC_IN1
DDC_IN2
SYNC_IN1
SYNC_IN2
VCC_SYNC
VCC_VIDEO
VCC_DDC
DDC_OUT1
DDC_OUT2
SYNC_OUT1
SYNC_OUT2
BYP
GND
UCM2009
R124
R5%100KS03
R121
R5%100KS03
R123
R5%100RS03
R122
R5%100RS03
FB33
FB120R0A6S03
FB34
FB120R0A6S03
FB35
FB120R0A6S03
FB36
FB120R0A6S03
C207
C220NS03X
C223
C220NS03X
C214
C220NS03X
CN2
CN10PVF50C
CN4
CN10PVF50C
optional EMI filter
D42
DNUP1301
D41
DNUP1301
TV
RN14
RN75RVF
CN3
CN10PVF50C
CN6
CN10PVF50C
FB40
FB120R0A6S03
FB39
FB120R0A6S03
FB38
FB120R0A6S03
X44
GND
GND
Luminance
Chrominance
GND
NC
Composite
SHLD0
SHLD1
SHLD2
XMINIDIN7S
SHLDGND
TP2
TEST POINT
D45
DNUP1301
D46
DNUP1301
D47
DNUP1301
Congatec AG
Auwiesenstrasse 5
D-94469 Deggendorf
Germany
congatec
the rhythm of embedded computing
Title
VGA TV
Size
B
Document Number
PEVASA0
Created
HMA
Rev
A.0
Date:
Wednesday, April 05, 2006
Sheet
14
of
21

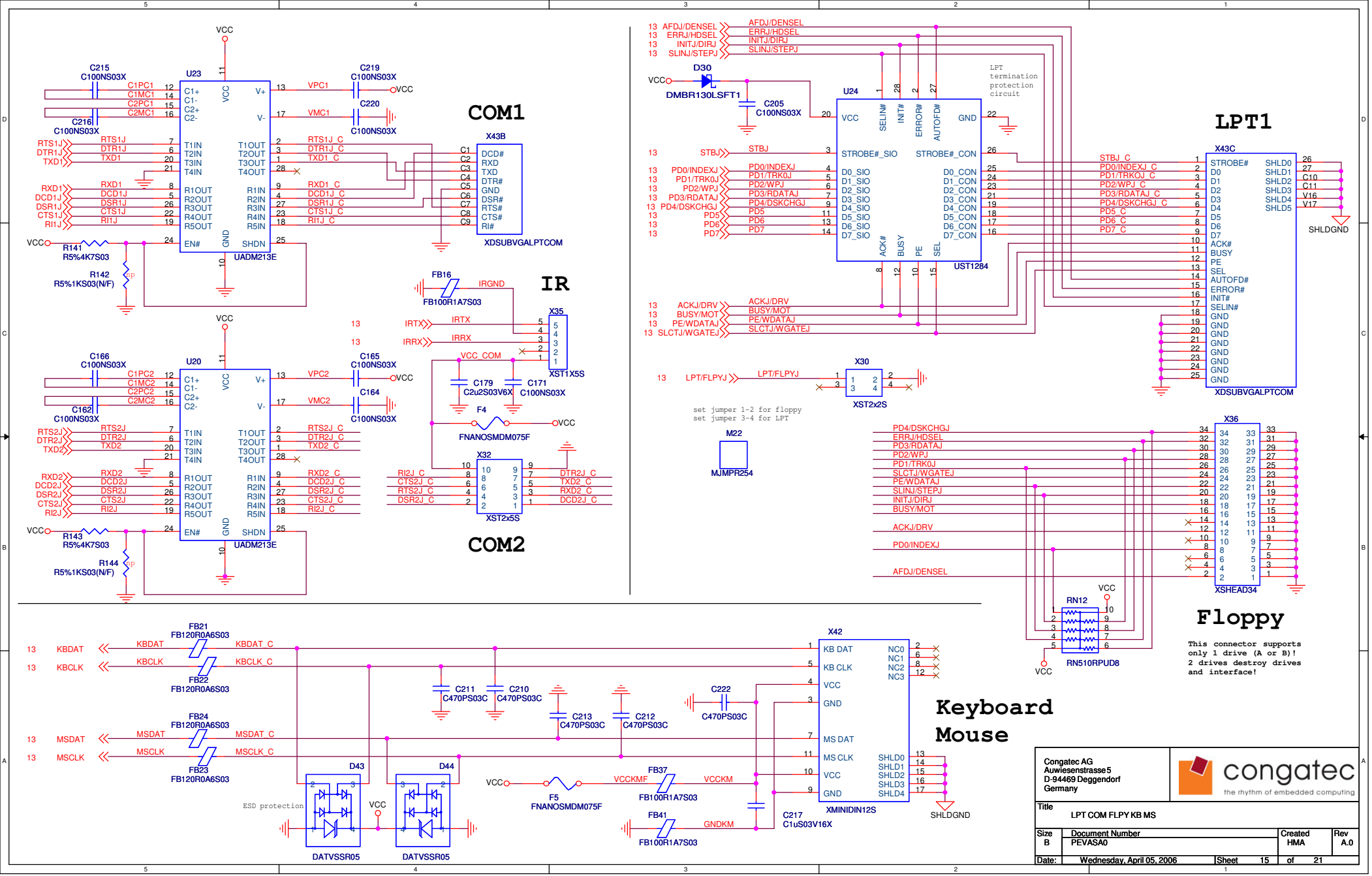
COM1
COM2
IR
LPT1
Floppy
Keyboard
Mouse
U23
U20
UADM213E
X43B
XDSUBVGALPTCOM
X35
XST1X5S
X32
XST2x5S
U24
UST1284
D30
DMBR130LSFT1
X43C
X30
XST2x2S
M22
MJMPR254
X36
XSHEAD34
RN12
RN510RPUD8
X42
XMINIDIN12S
D43
D44
DATVSSR05
LPT termination protection circuit
set jumper 1-2 for floppy
set jumper 3-4 for LPT
This connector supports only 1 drive (A or B)! 2 drives destroy drives and interface!
ESD protection
SHLDGND
Congatec AG
Auwiesenstrasse 5
D-94469 Deggendorf
Germany
congatec
the rhythm of embedded computing
Title
LPT COM FLPY KB MS
Size
B
Document Number
PEVASA0
Created
HMA
Rev
A.0
Date:
Wednesday, April 05, 2006
Sheet 15 of 21

LCD

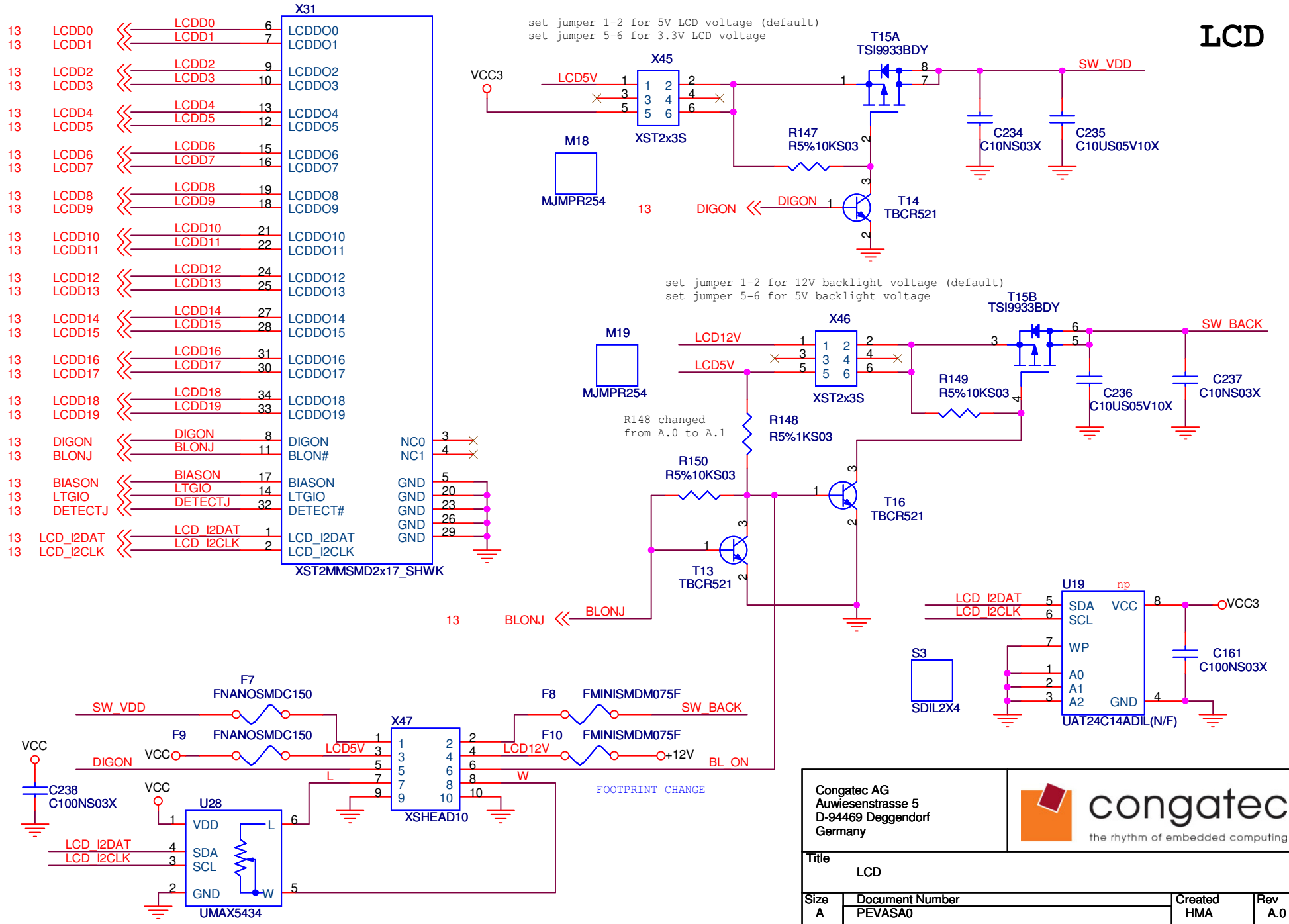

Congatec AG Auwiesenstrasse 5 D-94469 Deggendorf Germany	congatec the rhythm of embedded computing
Title	LCD
Size: A	Document Number: PEVASA0
Created: HMA	Rev: A.0
Date: Wednesday, April 05, 2006	Sheet 16 of 21

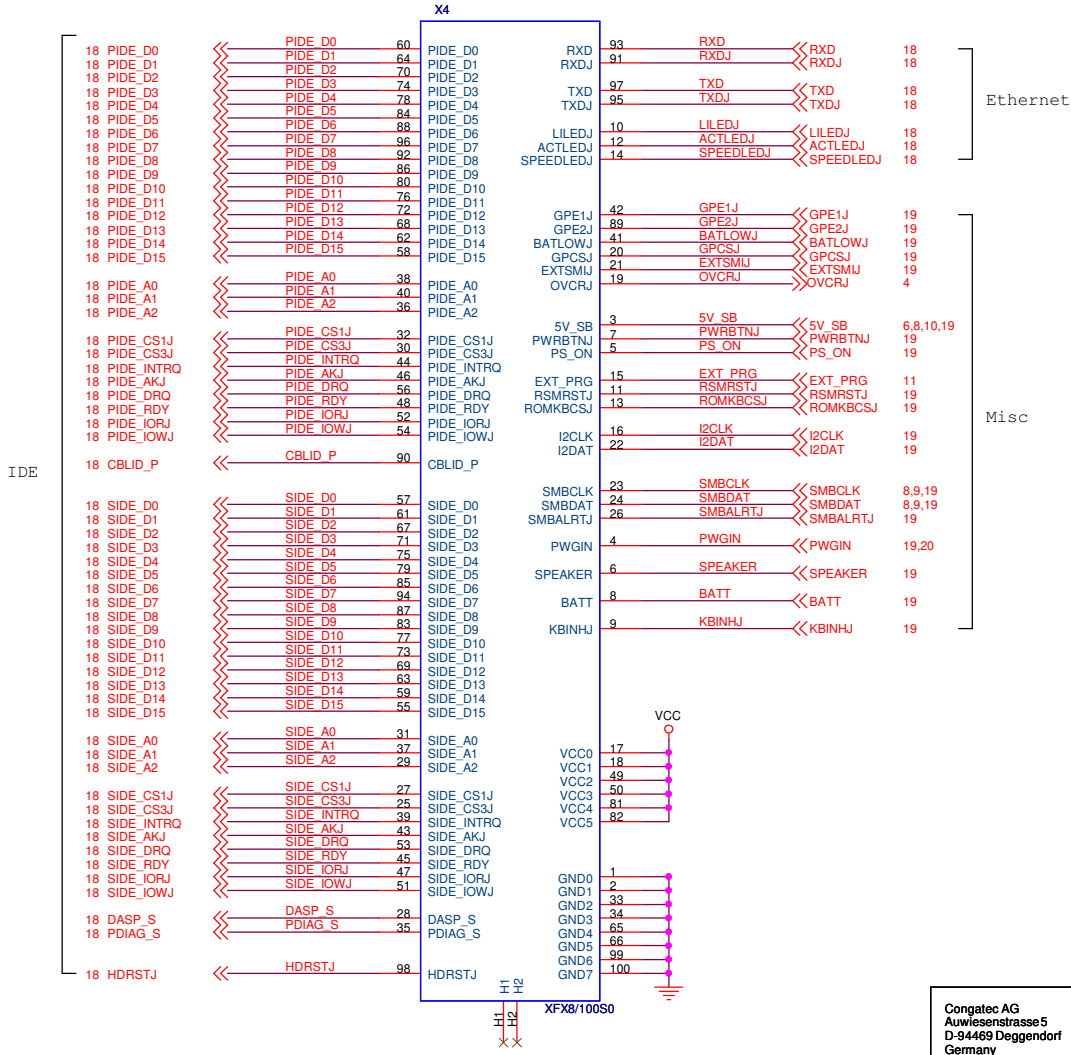

ETX Connector X4

IDE / Ethernet / Misc

Congatec AG Auwiesenstrasse 5 D-94469 Deggendorf Germany	congatec the rhythm of embedded computing		
Title: XTX Connector X4			
Size: B	Document Number: PEVASA0	Created: HMA	Rev: A.0
Date: Wednesday, April 05, 2006	Sheet 17 of 21		

IDE

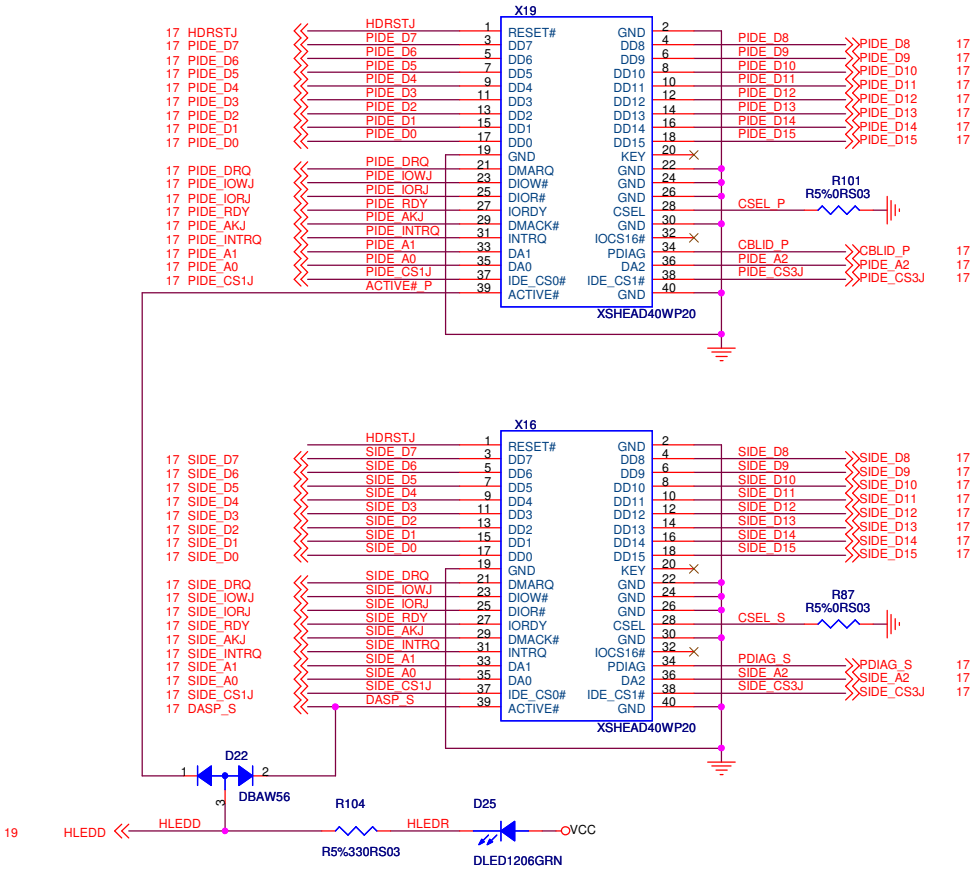

Ethernet

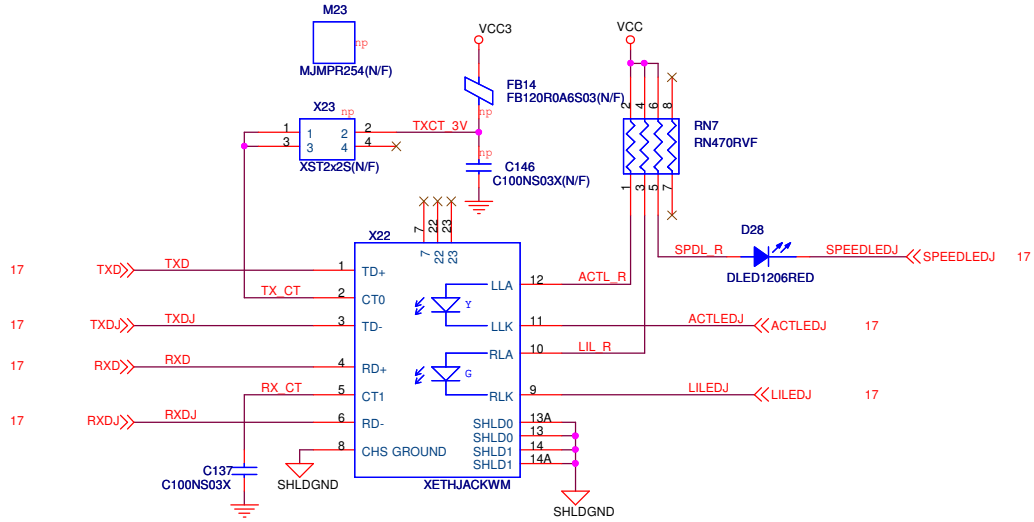

Congatec AG Auwiesenstrasse 5 D-94469 Deggendorf Germany			
Title: IDE and Ethernet			
Size: B	Document Number: PEVASA0	Created: HMA	Rev: A.0
Date: Wednesday, April 05, 2006	Sheet 18 of 21		

BATTERY

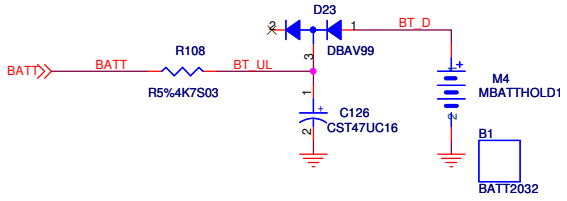

SPEAKER

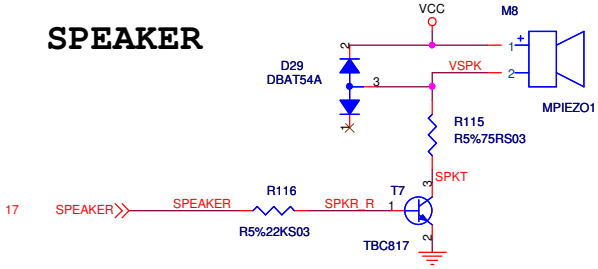

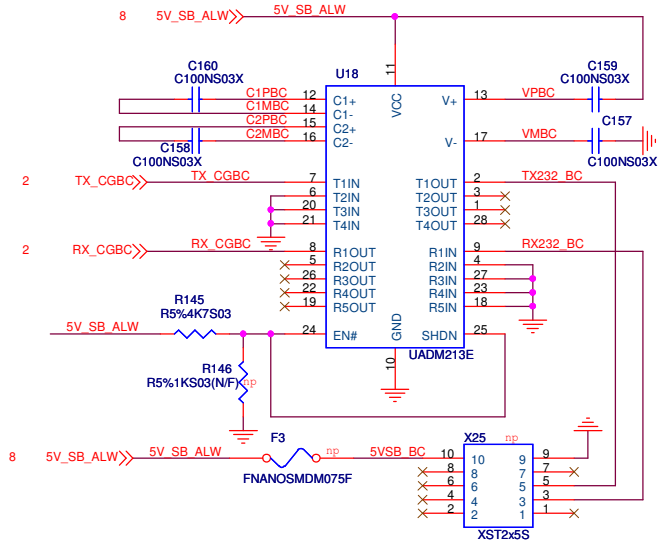

FEATURE

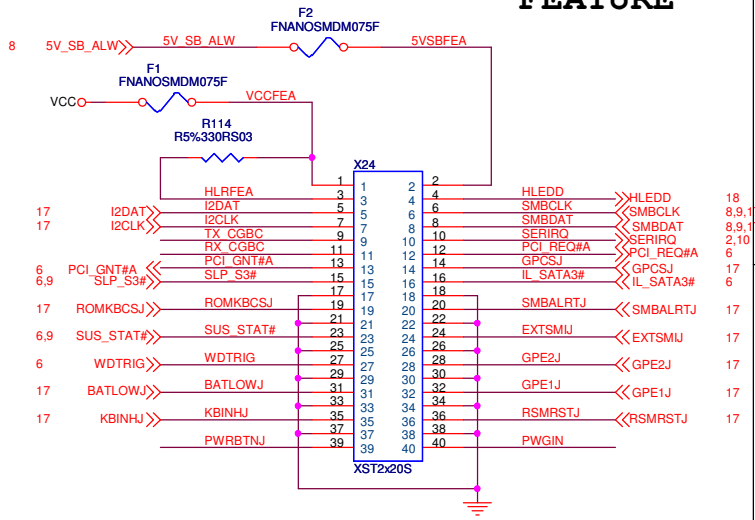

POWER ATX

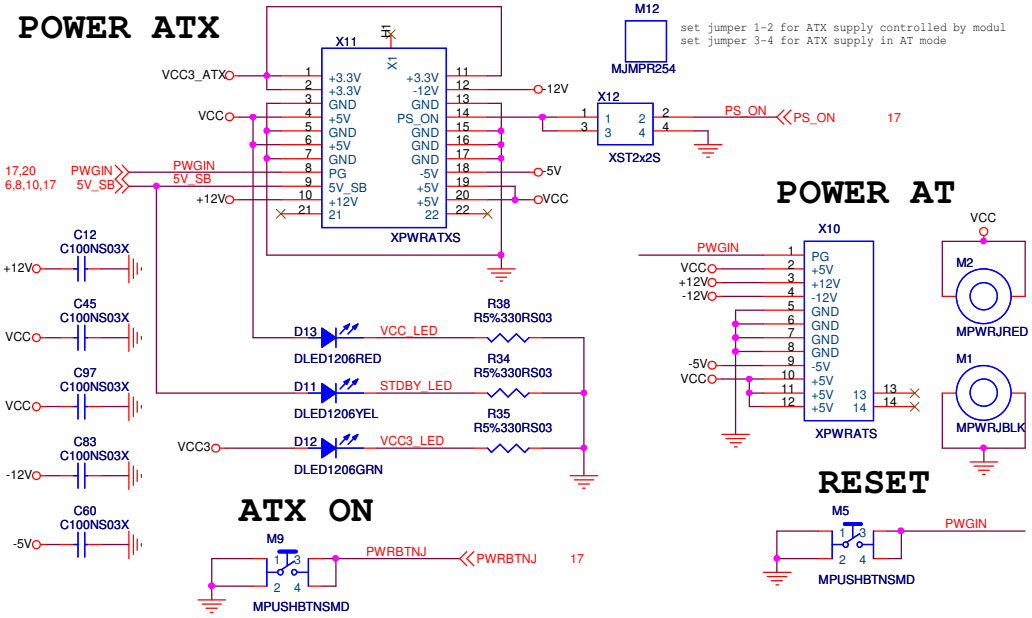

POWER AT

RESET

ATX ON

FAN control

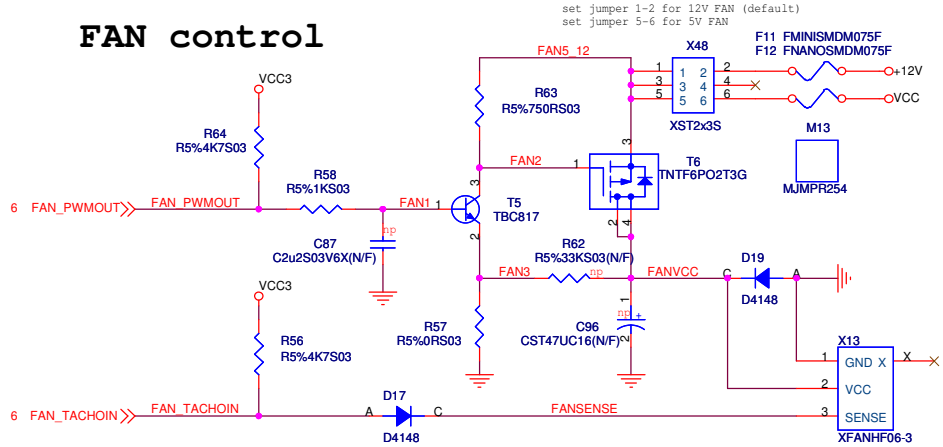

I2C Eeprom

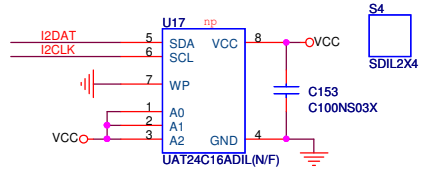

Congatec AG
Auwiesenstrasse 5
D-94469 Deggendorf
Germany

congatec
the rhythm of embedded computing

Title			
PWR BATT SPK Feature FAN			
Size: B	Document Number: PEVASA0	Created: HMA	Rev: A.0
Date: Wednesday, April 05, 2006	Sheet 19 of 21		

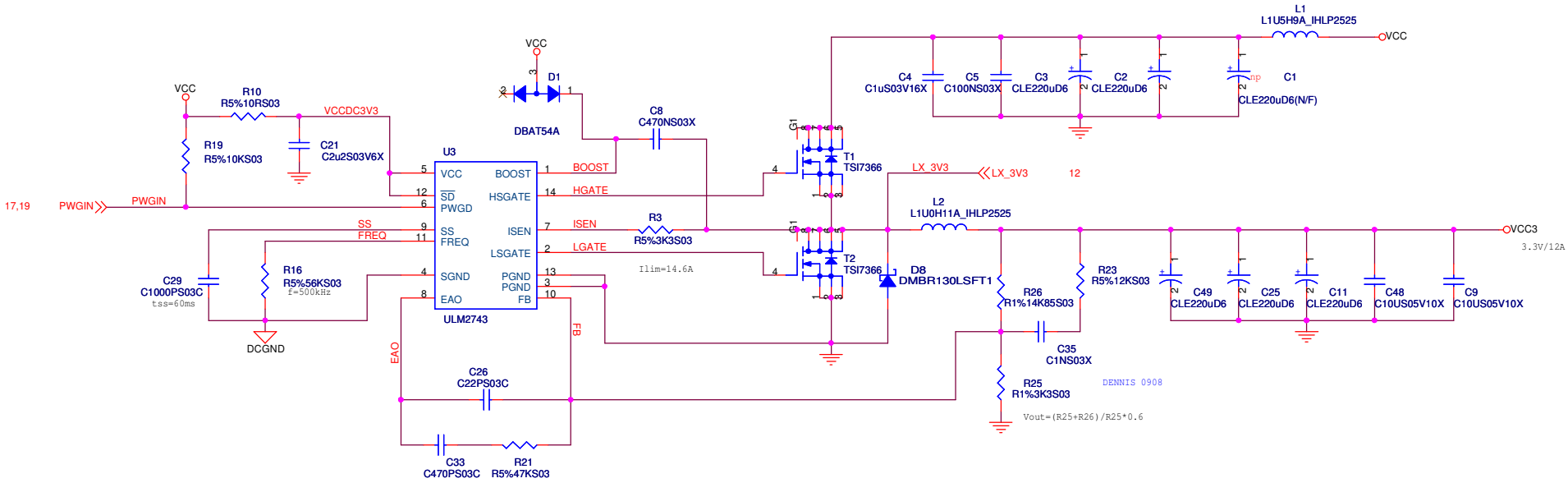

Congatec AG Auwiesenstrasse 5 D-94469 Deggendorf Germany			
Title: DCDC 3.3V			
Size: B	Document Number: PEVASA0	Created: HMA	Rev: A.0
Date: Wednesday, April 05, 2006	Sheet 20 of 21		

Revision History

Rev. X.0	26.01.05	HMA	0	design created
Rev. X.1	??.??.05	DWG	all	corrected some footprints in PCB
			4	added resistors to use different versions of USB power switches
			8	corrected GND of C82
			10	added resistor to use different versions of serial transmitters
			14	modified pinout of X44
			15	added resistor to use different versions of serial transmitters
			19	added resistor to use different versions of serial transmitters
Rev. A.0	23.05.05	HMA	1	mounting holes for XDVI
			5	exchanged 9536 by 9572 due to complex logic
			6	added resistor jumpers to seperate EXCx_RST# signals
			9	modified ExpressCard Pinout
			10	added optional LPC bus connector for logic analyser
			11	changed connection of D15 to identify S2 as second boot device
				added flashes for BOM reference
			12	changed AC_SDIN0 to AC_SDIN2 on external AC97 codec
			16	new Page; moved LCD interface from page 14 and completly revised
			19	enable of U18 connected to 5V standby
				changed fan voltage connector to prevent shortage (5V/12V) and added fuses for UL
			all	changed some components values

Congatec AG
Auwiesenstrasse 5
D-94469 Deggendorf
Germany

congatec
the rhythm of embedded computing

Title: Revision History			
Size: B	Document Number: PEVASA0	Created: HMA	Rev: A.0
Date: Wednesday, April 05, 2006	Sheet 21 of 21		