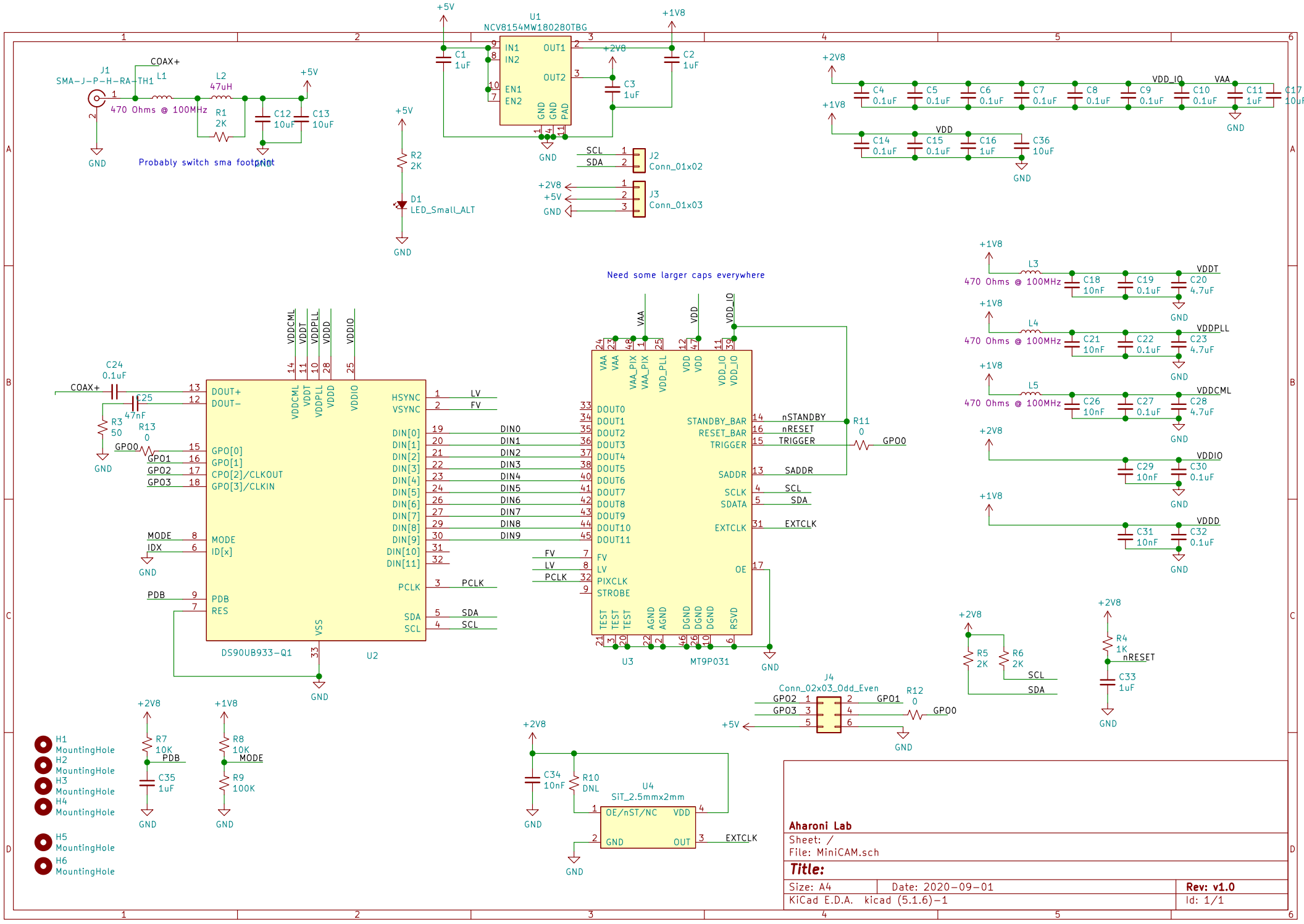
U1
NCV8154MW180280TBG
IN1
IN2
EN1
EN2
OUT1
OUT2
GND
PAD
J1
SMA-J-P-H-RA-TH1
COAX+
L1
470 Ohms @ 100MHz
L2
47uH
R1
2K
C12
10uF
C13
10uF
Probably switch sma footprint
C1
1uF
C2
1uF
C3
1uF
+5V
+1V8
+2V8
R2
2K
D1
LED_Small_ALT
J2
Conn_01x02
SCL
SDA
J3
Conn_01x03
C4
0.1uF
C5
0.1uF
C6
0.1uF
C7
0.1uF
C8
0.1uF
C9
0.1uF
C10
0.1uF
C11
1uF
C17
10uF
VDD_IO
VAA
C14
0.1uF
C15
0.1uF
C16
1uF
C36
10uF
VDD
GND
Need some larger caps everywhere
L3
470 Ohms @ 100MHz
C18
10nF
C19
0.1uF
C20
4.7uF
VDDT
L4
C21
10nF
C22
0.1uF
C23
4.7uF
VDDPLL
L5
C26
10nF
C27
0.1uF
C28
4.7uF
VDDCML
C29
10nF
C30
0.1uF
VDDIO
C31
10nF
C32
0.1uF
VDDD
C24
0.1uF
C25
47nF
R3
50
R13
0
GPO0
GPO1
GPO2
GPO3
MODE
IDX
PDB
DOUT+
DOUT−
GPO[0]
GPO[1]
CPO[2]/CLKOUT
GPO[3]/CLKIN
ID[x]
RES
VSS
HSYNC
VSYNC
DIN[0]
DIN[1]
DIN[2]
DIN[3]
DIN[4]
DIN[5]
DIN[6]
DIN[7]
DIN[8]
DIN[9]
DIN[10]
DIN[11]
PCLK
LV
FV
DS90UB933-Q1
U2
DOUT0
DOUT1
DOUT2
DOUT3
DOUT4
DOUT5
DOUT6
DOUT7
DOUT8
DOUT9
DOUT10
DOUT11
STANDBY_BAR
RESET_BAR
TRIGGER
SADDR
SCLK
SDATA
EXTCLK
OE
PIXCLK
STROBE
nSTANDBY
nRESET
R11
0
U3
MT9P031
J4
Conn_02x03_Odd_Even
R12
0
R5
2K
R6
2K
R4
1K
C33
1uF
R7
10K
C35
1uF
R8
10K
R9
100K
C34
10nF
R10
DNL
U4
SiT_2.5mmx2mm
OE/nST/NC
OUT
H1
MountingHole
H2
MountingHole
H3
MountingHole
H4
MountingHole
H5
MountingHole
H6
MountingHole
Aharoni Lab
Sheet: /
File: MiniCAM.sch
Title:
Size: A4
Date: 2020-09-01
Rev: v1.0
KiCad E.D.A. kicad (5.1.6)-1
Id: 1/1