NO:RD-HC-SD027
DATE: 2013/01/09 R (REV:A14)

10/100 PC CARD MAGNETIC MODULE
MODEL NO.: HC-027

FEATURE:

RoHS Compliant

Do not use material and use that the prohibition that SS-00259 stipulates
RoHS peak solder rating 260℃/ 3~5Sec
Designed to meet IR requirement
Meets IEEE802.3 Baseline Wander Compensation specification
Specifications @ 25℃
Operating temp : 0℃ to +80℃
OCL : 350uH MIN.(100KHz,100mV) Cw/w : 25 pF Max. (100KHz,100mV)
DCR (1-2 & 5-6 PIN) : 1.0 Ω Max DCR (7-8 & 11-12 PIN) : 1.5 Ω Max.
CASE Pin Surface plating : Sn Thickness 5 µm min.
HIPOT(VAC)：1500 (60s / 10mA) CHIP SIDE:(1-2-3)&(4-5-6) Short , LAN SIDE (7-8-9)&(10-11-12) Short
MSL=2

Part Number	Turns Ratio (±5%)	Insertion Loss (dB MIN)	Return Loss (dB MIN)		Common Mode Rejection Ratio (dB MIN .)		Cross Talk (dB MIN)	
HC-027	TX/RX	0.1~125 MHz	1~40 MHz	40~100 MHz	2 MHz	30-200 MHz	1 MHz	10~100 MHz
	1CT:1CT	-1.1	-16	$-10+20*\log_{10}(f/80MHz)$	-42	$-15+20*\log_{10}(f/200\ MHz)$	-50	$-50+22*\log_{10}(f/10MHz)$

SCHEMATIC:

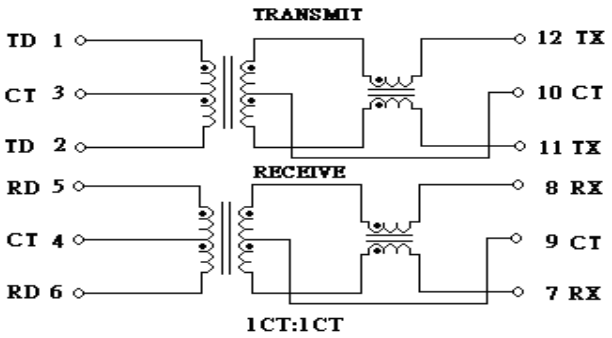

DIMENSION: mm

TOLERANCE: (±0.25)

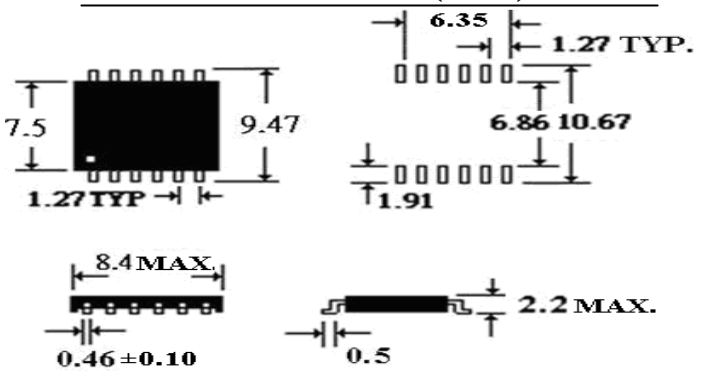

Packing:

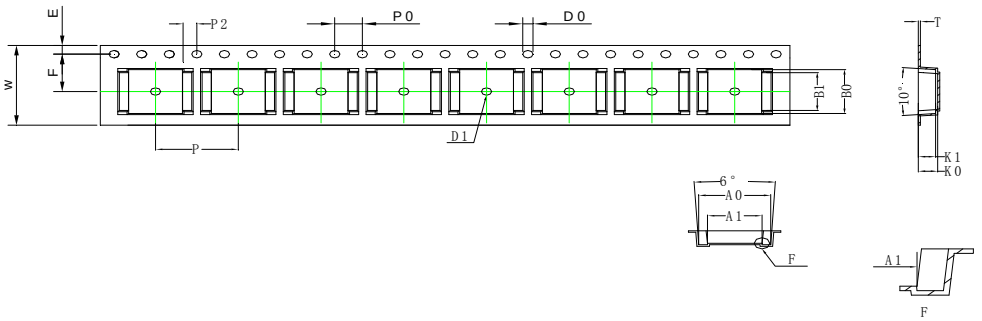

D_0	P_0	P_2
$1.5^{+0.10}_{-0.00}$	$4.0^{+0.10}_{-0.10}$	$2.0^{+0.10}_{-0.10}$

ITEM	W	A_0	A_1	B_0	B_1	K_0	K_1	E	D_1	P	F	T
DIM	$16.0^{+0.30}_{-0.30}$	$10.45^{+0.10}_{-0.10}$	$7.90^{+0.10}_{-0.10}$	$8.80^{+0.10}_{-0.10}$	$7.60^{+0.10}_{-0.10}$	$2.80^{+0.10}_{-0.10}$	$2.50^{+0.10}_{-0.10}$	$1.75^{+0.10}_{-0.10}$	$1.50^{+0.10}_{-0.00}$	$12.0^{+0.10}_{-0.10}$	$7.50^{+0.10}_{-0.10}$	$0.30^{+0.05}_{-0.05}$

MODEL NO.: HC-027

Solder Reflow profile for Lead-Free packages.
Package Peak Reflow Temperatures

Classification Reflow Profiles

Profile Feature	Lead-Free Assembly	
Average ramp-up rate(T_L to T_P)	3： / Second Max.	
Preheat Temperature Min.(Ts min.) Temperature Max.(Ts max.) Time (min to max) (t_s)	 150： 200： 60-180 sec	
Ts max. to T_L Ramp-up Rate	3： / Second Max.	
Time maintained above Temperature (T_L) Time (t_L)	217： 60-150 sec	
Peak Temperature (Tp) Time within 5 ： of actual peak Temp.	260 +0 / -5： 3 to 5 Sec	250 +0 / -5： 20 to 40 Sec
Ramp-down	6： / Second Max.	
Time 25： to Peak Temperature	8 minutes Max.	

Profile

NO:RD-HC-SD027
DATE: 2013/01/09 R (REV:A14)

MODEL NO. : HC-027

PACKING

1. **Tape & Reel：1400pcs / Reel , 7000pcs / Carton**

2. **Dry Pack：1pcs**
   Product Description:(5g Silica Gel Desiccant)
   PH: 4-8
   Package Materials: Paper(Length 6.5±1cm , Width 5±1cm)
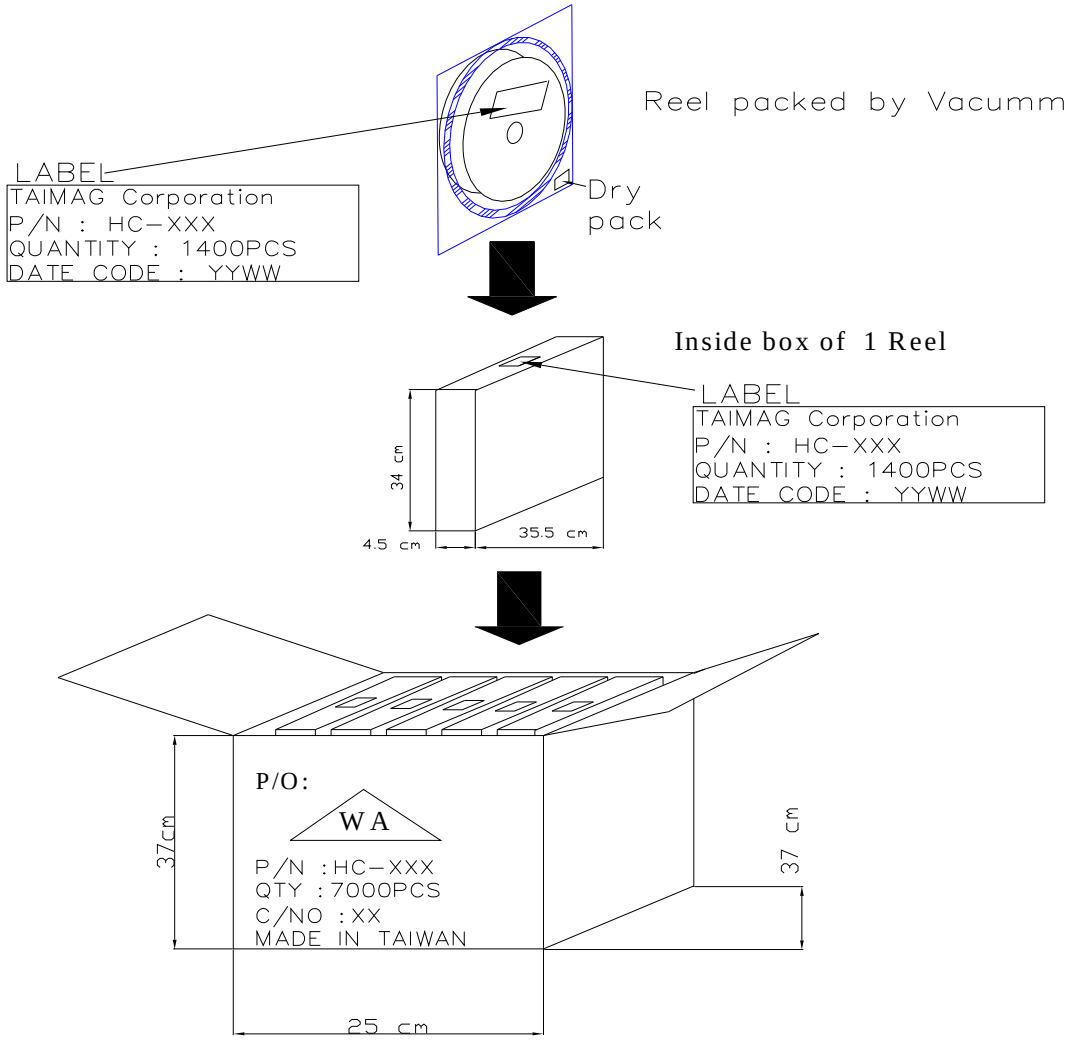
3. **Reel Packed By Vacuum**
   Reel (Diameter & Height): 33cm*2.08cm
4. **Seal Per JEDEC**