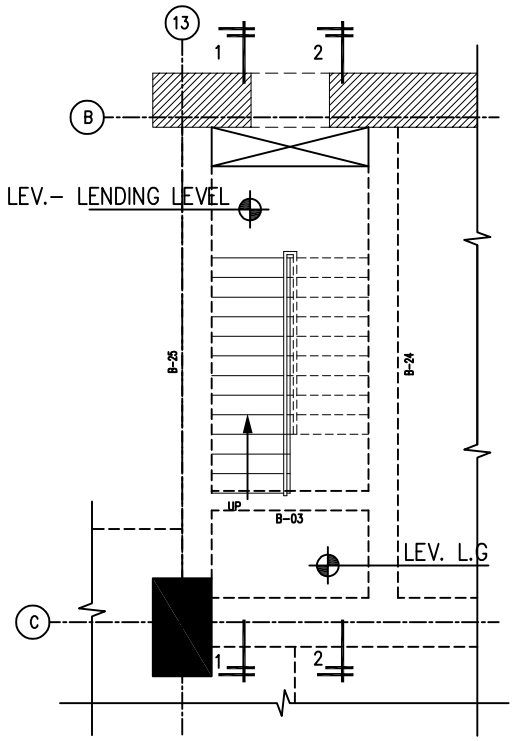

LOWER GROUND TO GROUND FLOOR
PART PLAN OF STAIR CASE (EM-05)

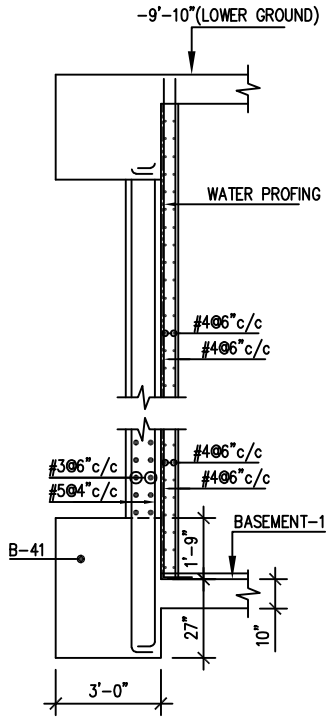

SECTION-N
1/4" = 1'-0"

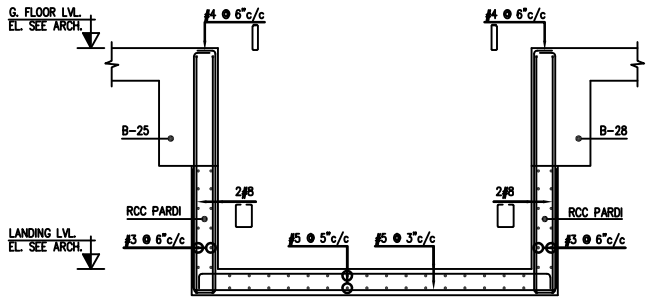

SECTION A-A

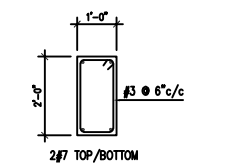

LANDING BEAM LB

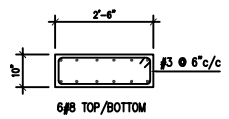

TYP. SECTION OF CB-01

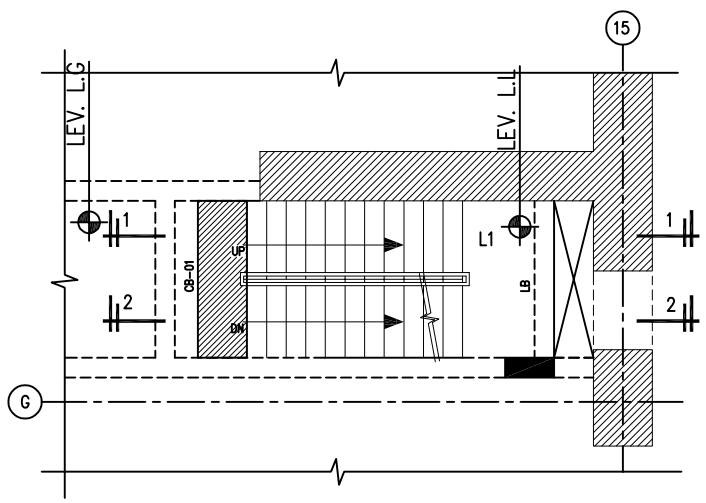

LOWER GROUND TO GROUND FLOOR PLAN
PART PLAN OF STAIR CASE (EM-03)

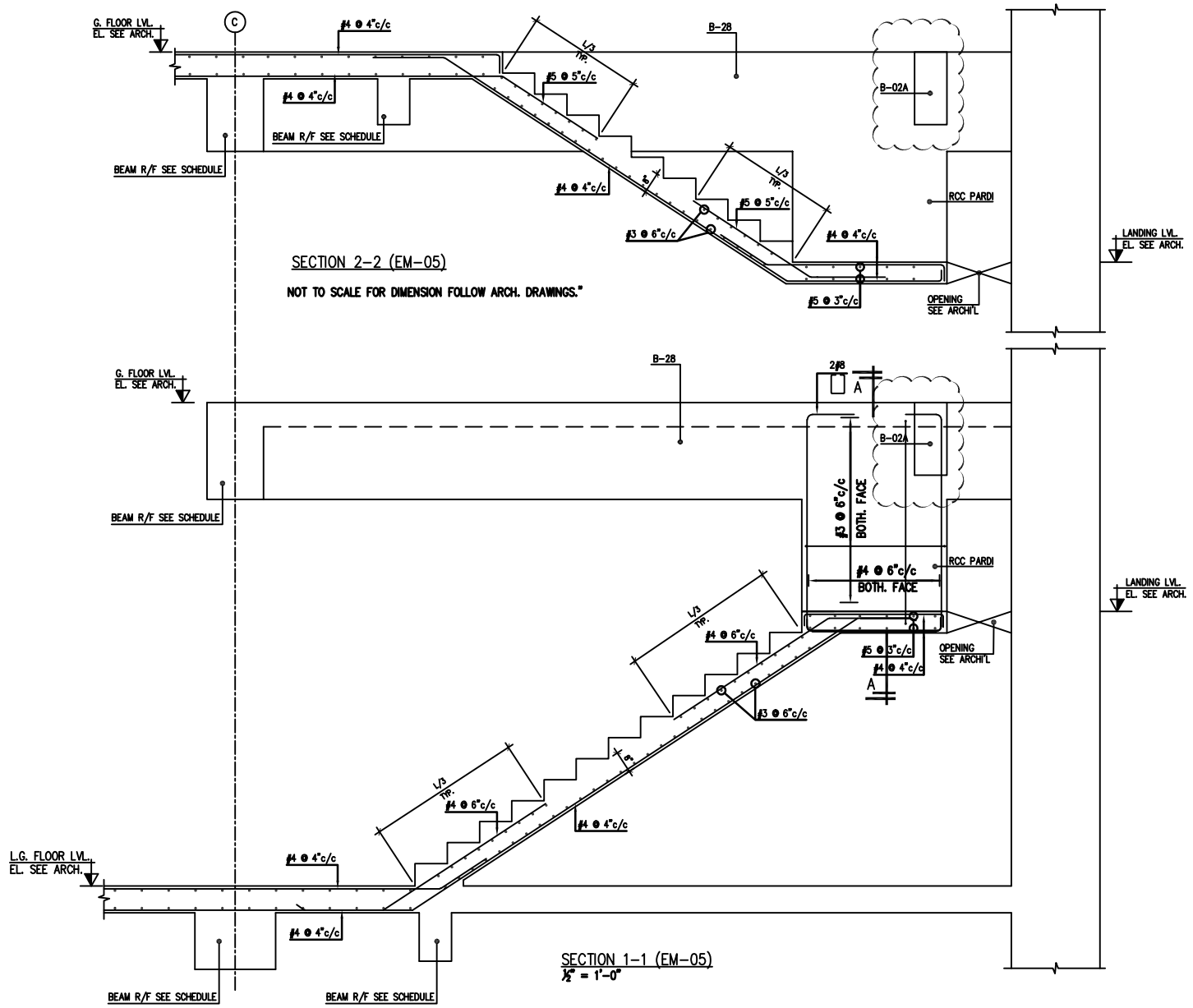

SECTION 2-2 (EM-05)

NOT TO SCALE FOR DIMENSION FOLLOW ARCH. DRAWINGS."

SECTION 1-1 (EM-05)
1/2" = 1'-0"

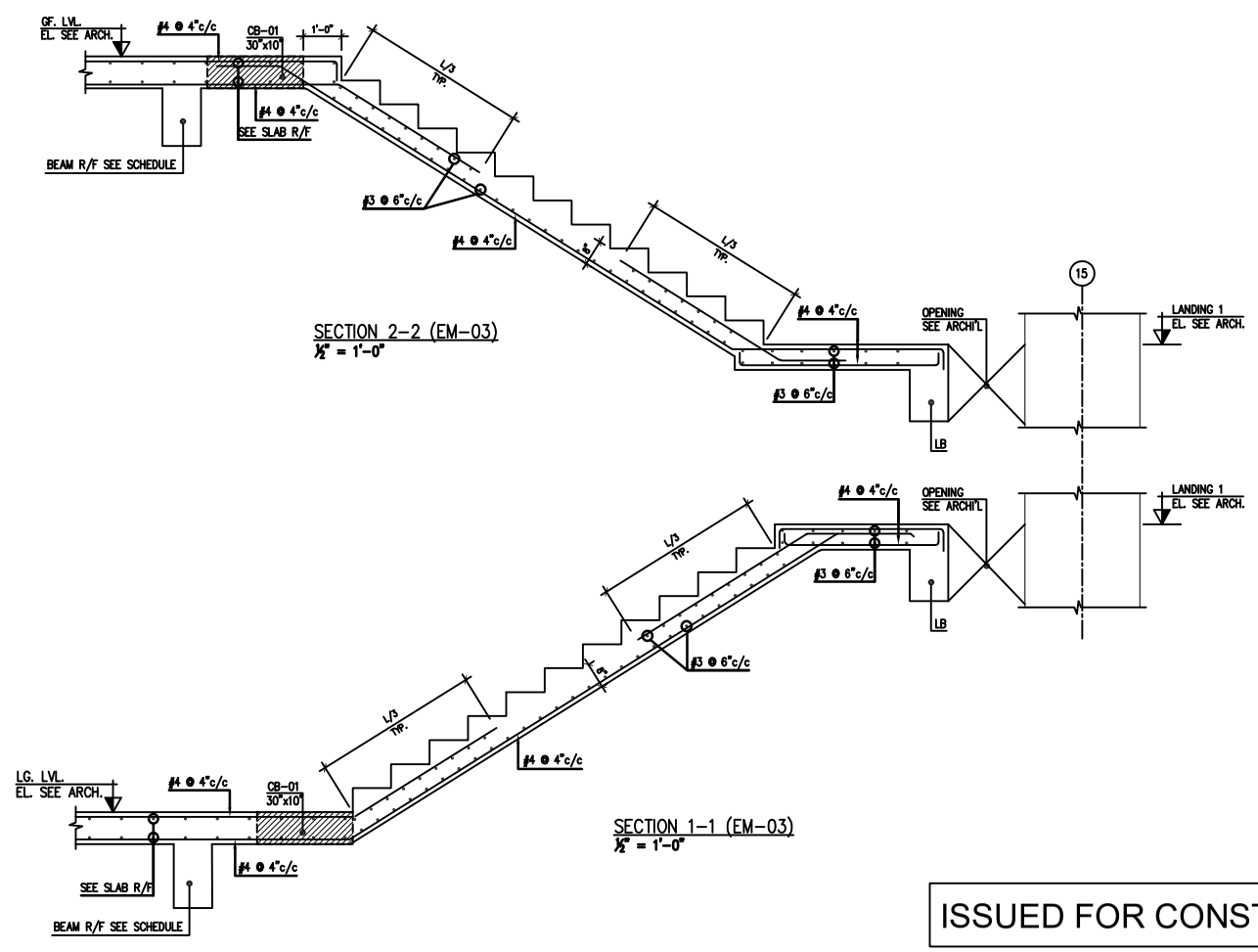

SECTION 2-2 (EM-03)
1/2" = 1'-0"

SECTION 1-1 (EM-03)
1/2" = 1'-0"

ISSUED FOR CONSTRUCTION