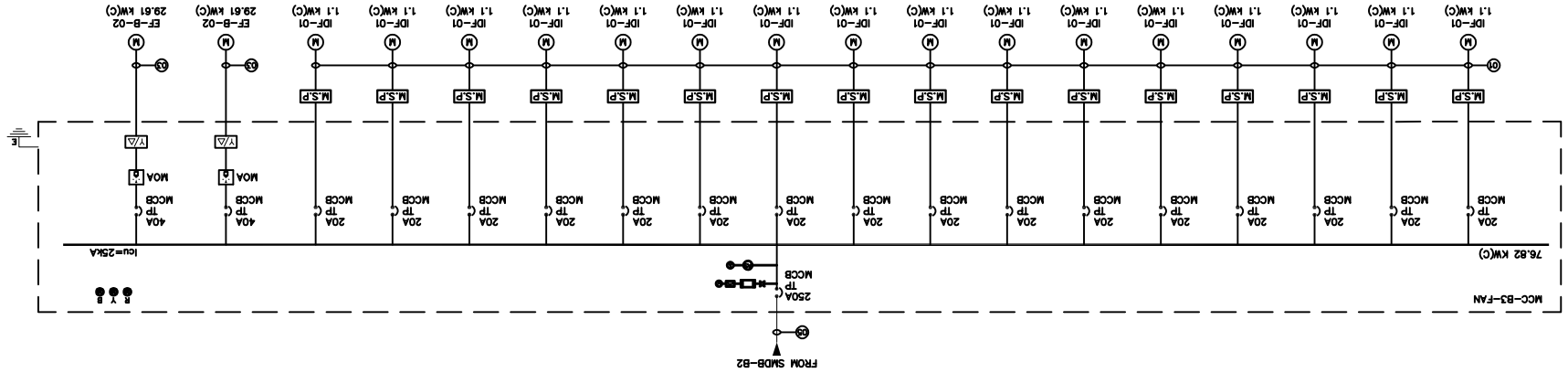
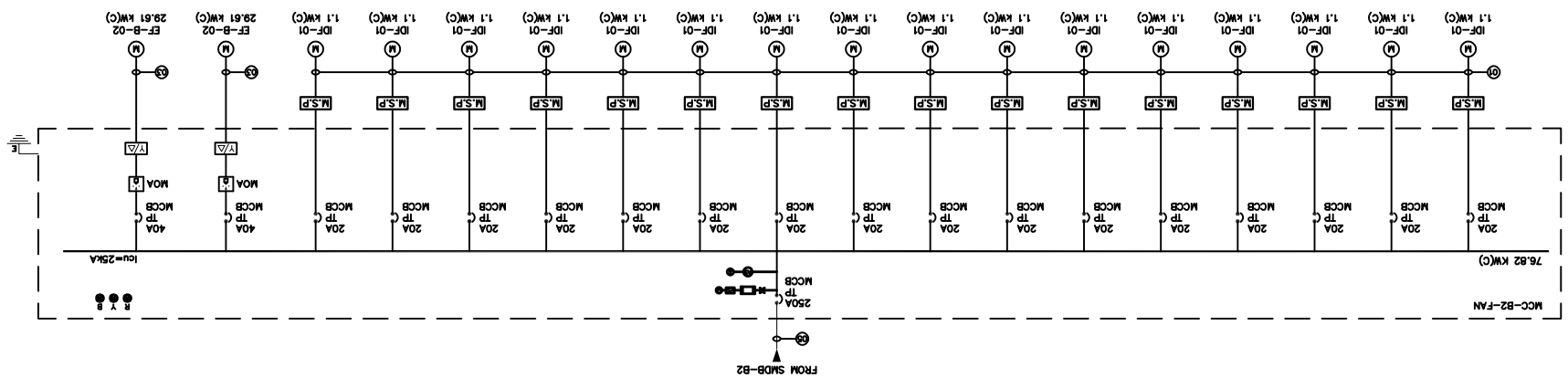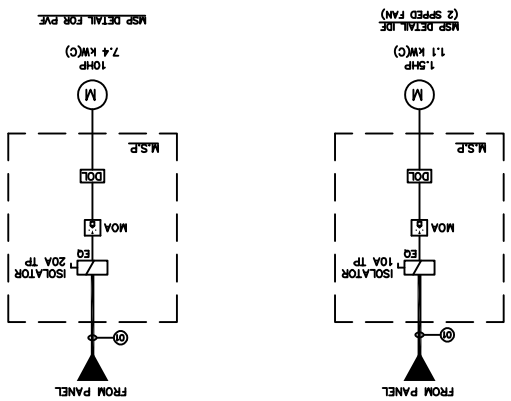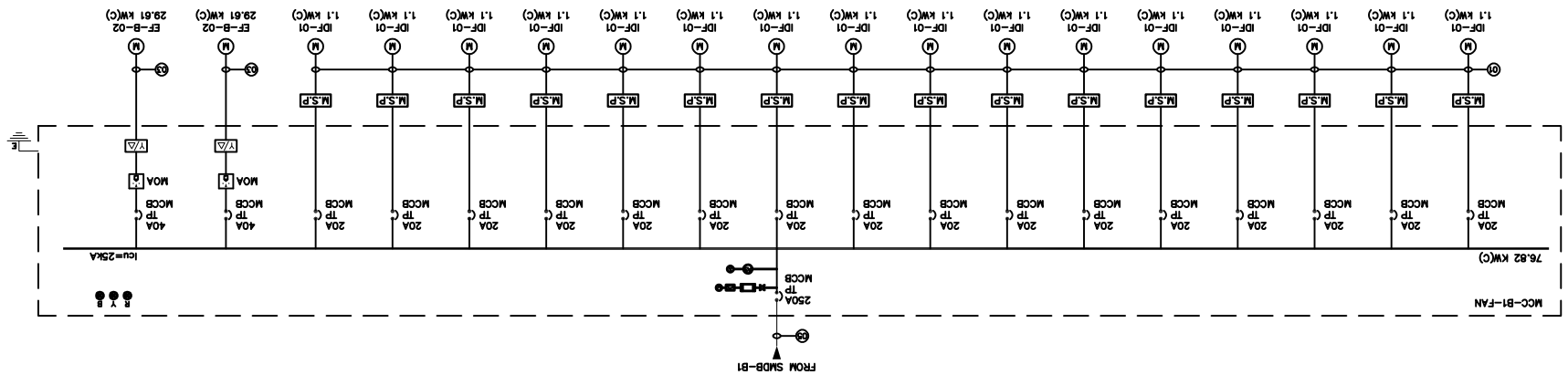
S.NO	DESCRIPTION
SCHEDULE OF CABLES	
1	4C – 4 sqmm. CU/PVC + 1C 4 sqmm. CU/PVC/YG ECC
2	4C – 6 sqmm. CU/PVC + 1C 6 sqmm. CU/PVC/YG ECC
3	3.5C – 50 sqmm. CU/PVC + 1C 25 sqmm. CU/PVC/YG ECC
4	3.5C – 95 sqmm. CU/PVC + 1C 50 sqmm. CU/PVC/YG ECC
5	3.5C – 185 sqmm. CU/PVC + 1C 95 sqmm. CU/PVC/YG ECC
6	3.5C – 300 sqmm. CU/PVC + 1C 150 sqmm. CU/PVC/YG ECC