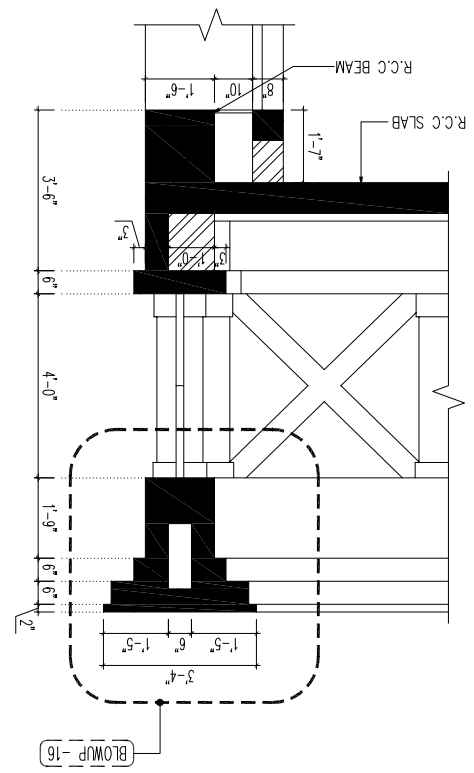

DETAIL -16 (STRUCTURAL DIMENSION)
SCALE- 3/8"=1'-0"

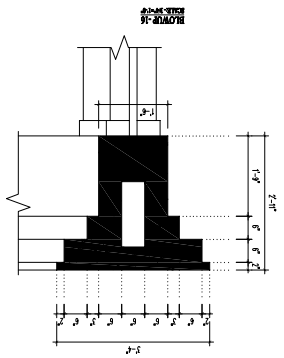

BLOWUP -16
SCALE- 3/8"=1'-0"

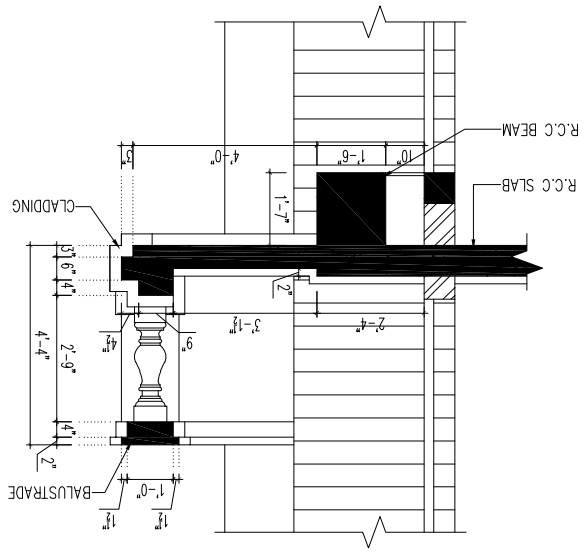

DETAIL -13 (STRUCTURAL DIMENSION)
SCALE- 3/8"=1'-0"

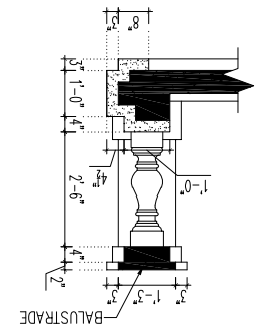

DETAIL -13 (CLADDING DIMENSION)
SCALE- 3/8"=1'-0"

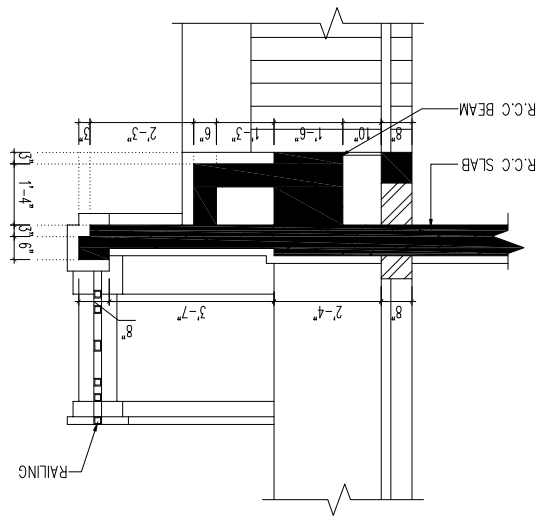

DETAIL -14 (STRUCTURAL DIMENSION)
SCALE- 3/8"=1'-0"

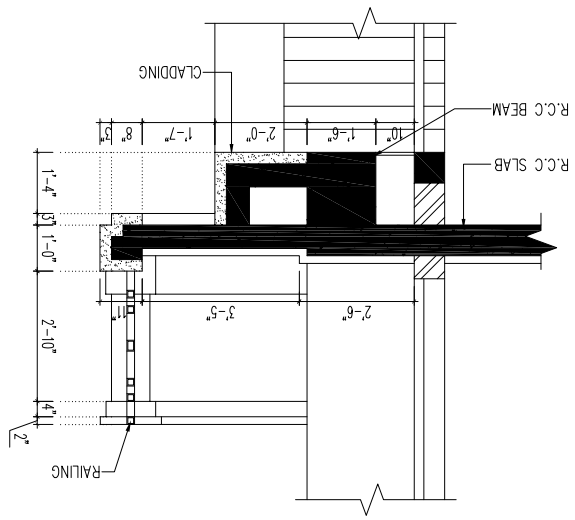

DETAIL -14 (CLADDING DIMENSION)
SCALE- 3/8"=1'-0"

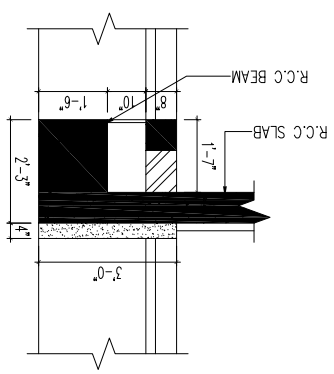

DETAIL -15
SCALE- 3/8"=1'-0"