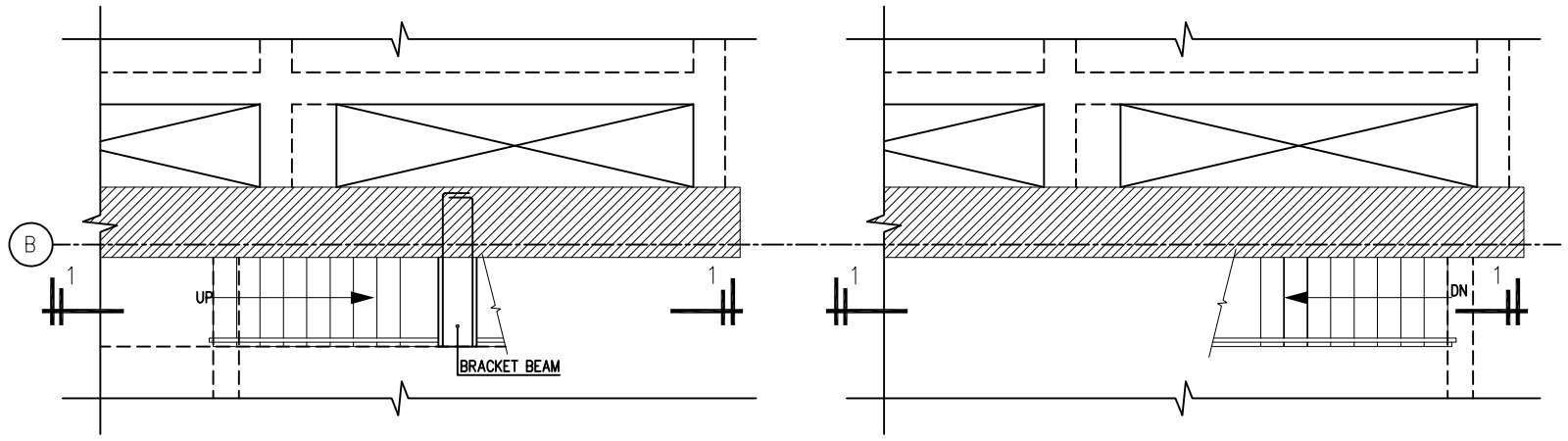

BASEMENT 01 TO LOWER GROUND FLOOR PLAN
PART PLAN OF STAIR CASE (EM-04)

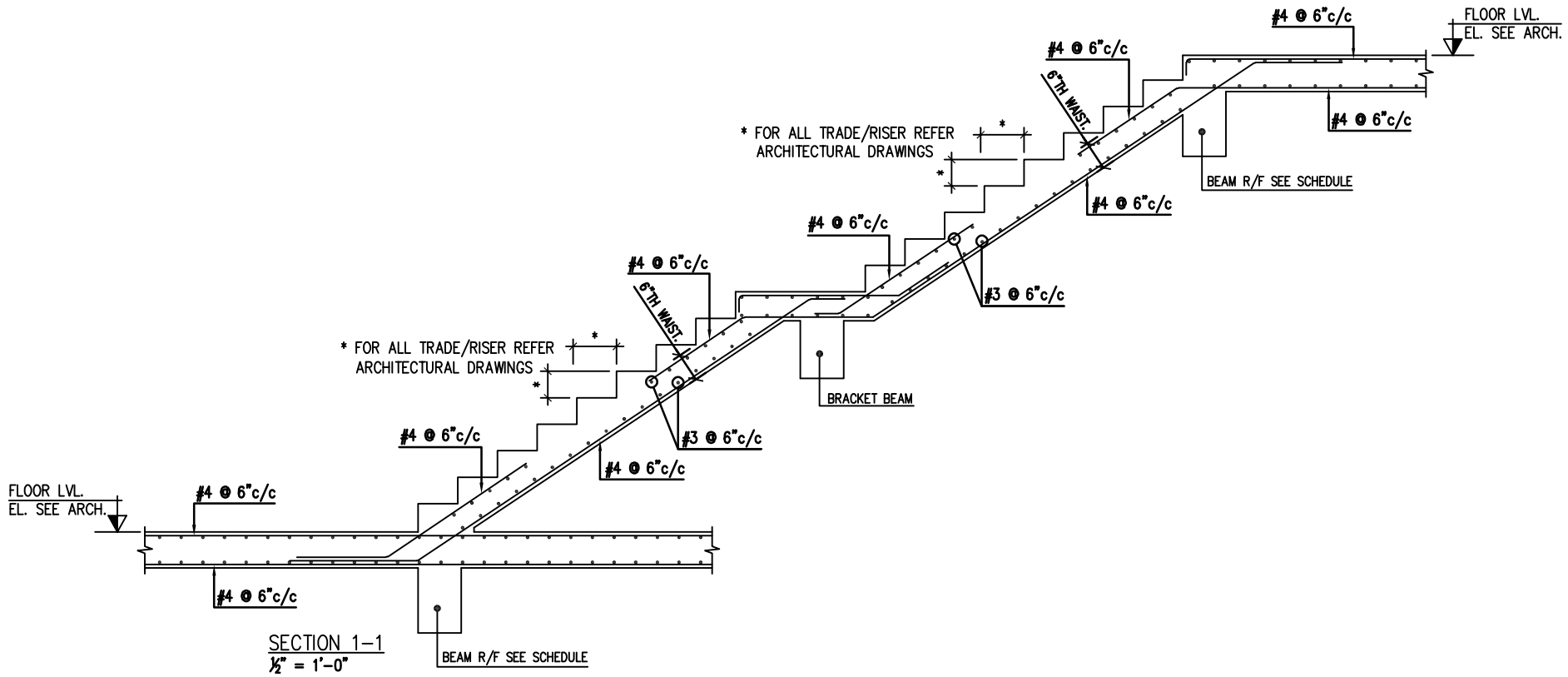

SECTION 1-1
½" = 1'-0"