Part title	Grater
No. off	1
Material	steel (ST.42)

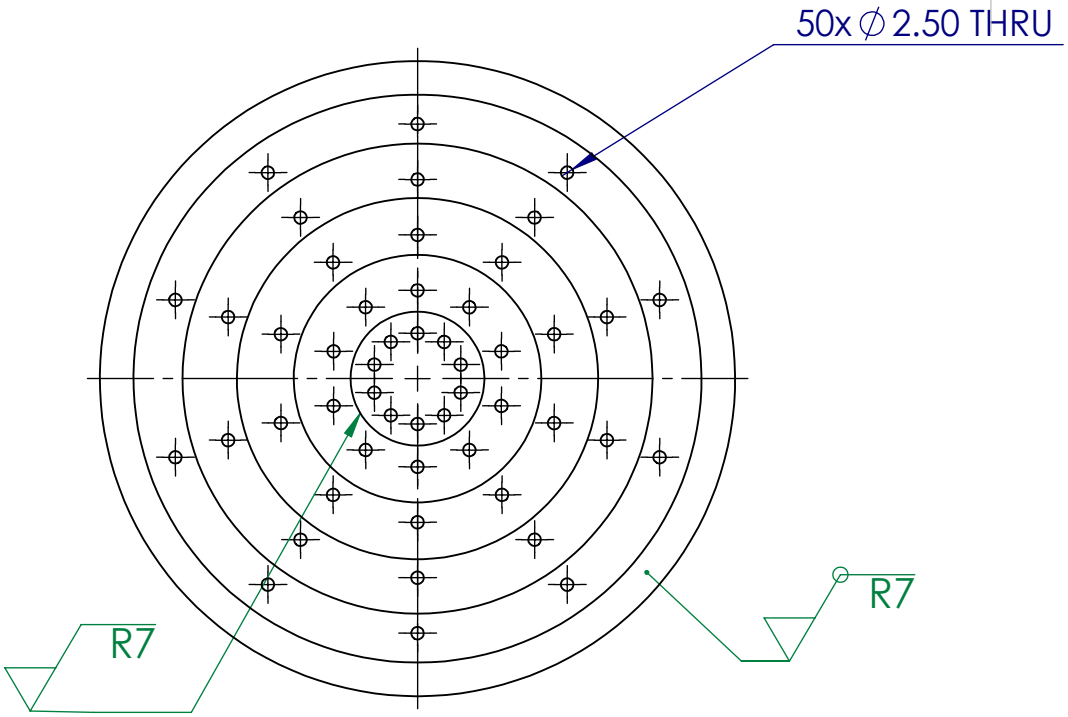

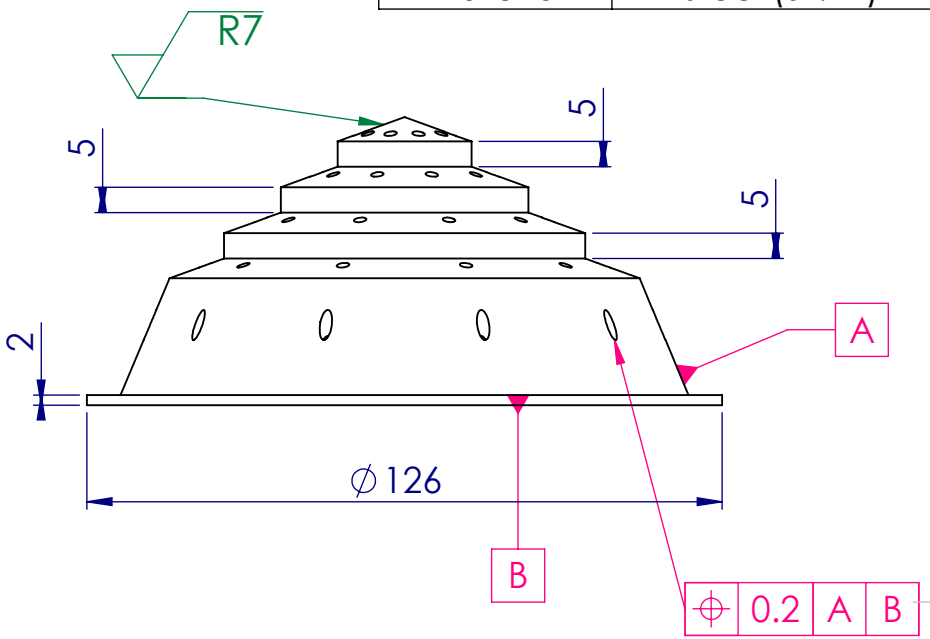

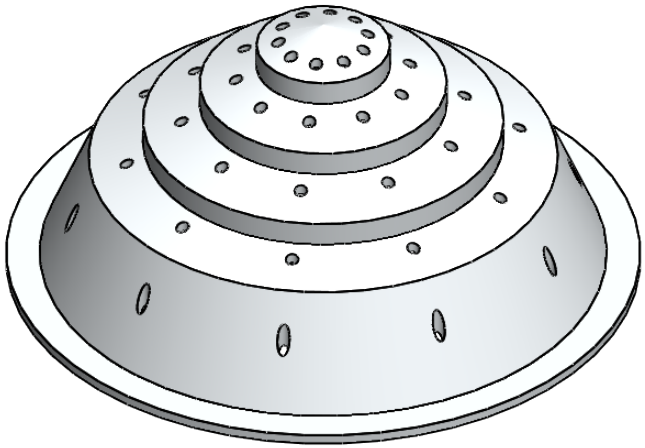

Course *MENG 204* FALL 2021	King Abdulaziz University ***Mechanical Engineering Department***		
Name	DWG Title **Grater**		
ID :	Drawing # **02.03**		
	Software SolidWorsks	File Name	
Date		Dimension: mm	A4
		Scale: 1:1	

SOLIDWORKS Educational Product. For Instructional Use Only.