Egyptian Academy For Engineering
And Advanced Technology

Design and Implementation of a NAND Gate Using BJTs

(Term Project)

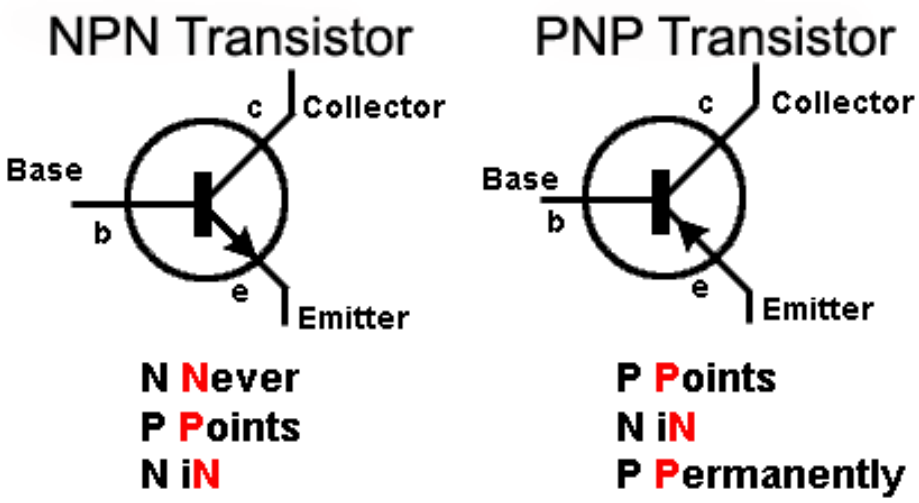

Done By:

Ahmed Mohammed 2022128

Supervised By:

Dr. Shimaa Mahdy

Eng. zahraa Atef

Eng. Azza Ramadan

10/12/2025

Abstract

this project presents the implementation of a NAND logic gate using discrete BC547 transistors and basic electronic components. The circuit operates with a 5 V power supply and produces a HIGH output for all input combinations except when both inputs are HIGH, where the output becomes LOW. By using the switching behavior of transistors,The project provides a simple and practical understanding of transistor-based logic gates.

1 Used Components

Name	Number	Image
BC547 Transistor	2	
RES	6	
led	1	
DC Input Voltage Module to Breadboard	1	
Button	2	

2 BC547 Transistor

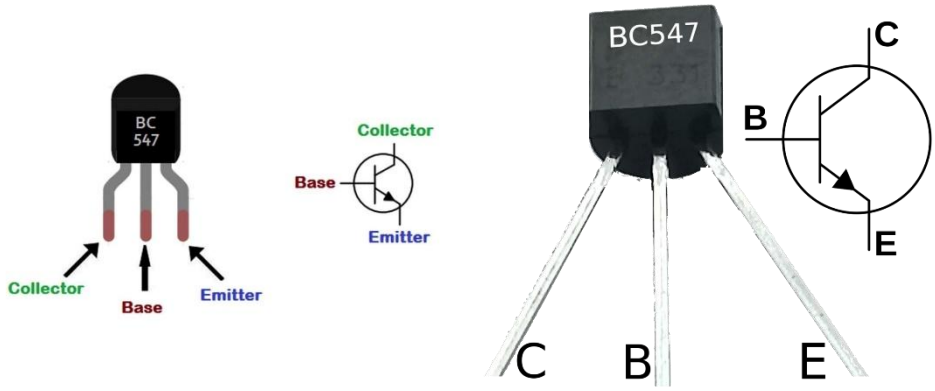

The BC547 is a general-purpose NPN bipolar junction transistor widely used in low-power electronic circuits. It is commonly applied in switching and amplification applications due to its stable performance, low noise characteristics, and ease of biasing. The transistor operates with a maximum collector-emitter voltage of about 45 V and a maximum collector current of 100 mA, making it suitable for logic circuits and small-signal designs.

3 NAND Gate

The NAND gate is a fundamental digital logic gate that performs the inverse operation of the AND gate. Its output is HIGH for all input combinations except when all inputs are HIGH, in which case the output becomes LOW. Due to this property, the NAND gate is considered a universal logic gate, meaning that any digital logic function can be implemented using only NAND gates. NAND gates are widely used in digital systems such as processors, memory circuits, and control units because of their simplicity, reliability, and ease of implementation using transistors.

$$X = \overline{A.B}$$

A	B	X
0	0	1
0	1	1
1	0	1
1	1	0

4 BJT configuration (load line)

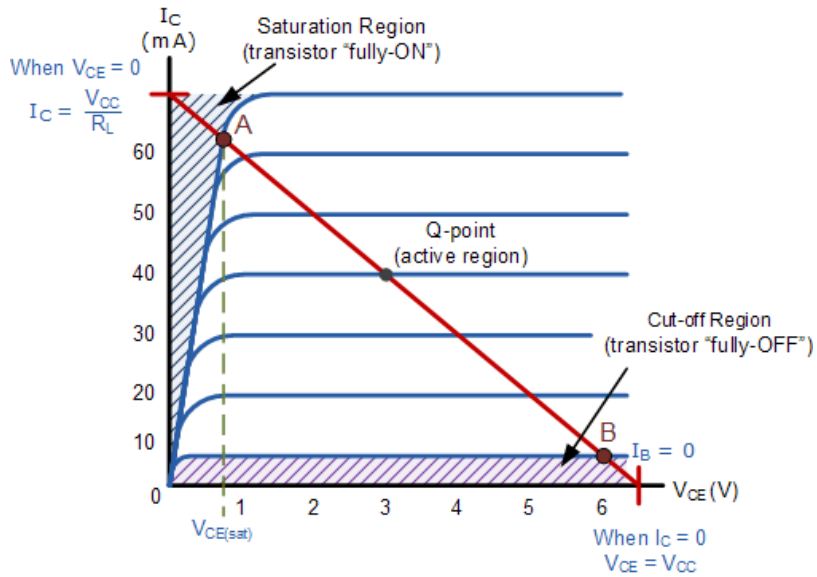

The BJT in this circuit is operating as a switch

1. **Cutoff point (B):**
   - $I_C = 0$
   - $V_{CE} = V_{CC}$
   - Transistor is **OFF**

2. **Saturation point (A):**
   - $V_{CE} \approx 0$
   - $I_C \approx \frac{V_{CC}}{R_C}$
   - Base current is **large**
   - Increasing I_B does **not** increase I_C
   - $V_{CE} \approx 0.1\text{–}0.3\,\text{V}$

Region	I_B	I_C	V_{CE}	Transistor State
Cutoff	0	0	V_{CC}	OFF
Active	> 0	βI_B	Medium	Amplifier
Saturation	High	Max	≈ 0	Fully ON
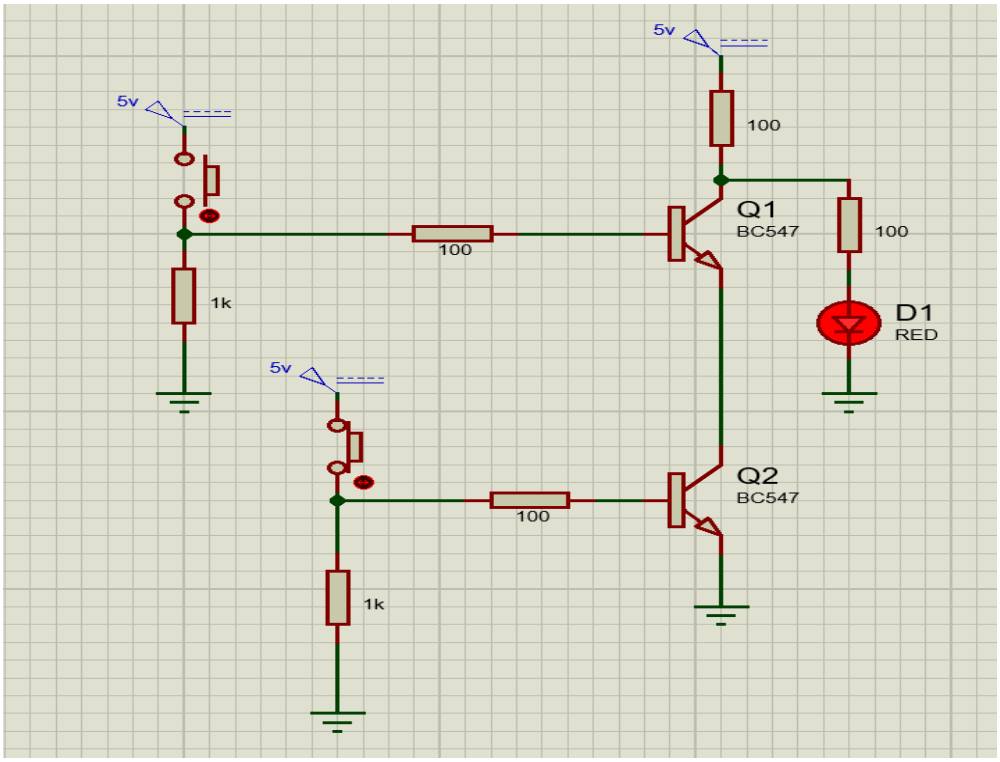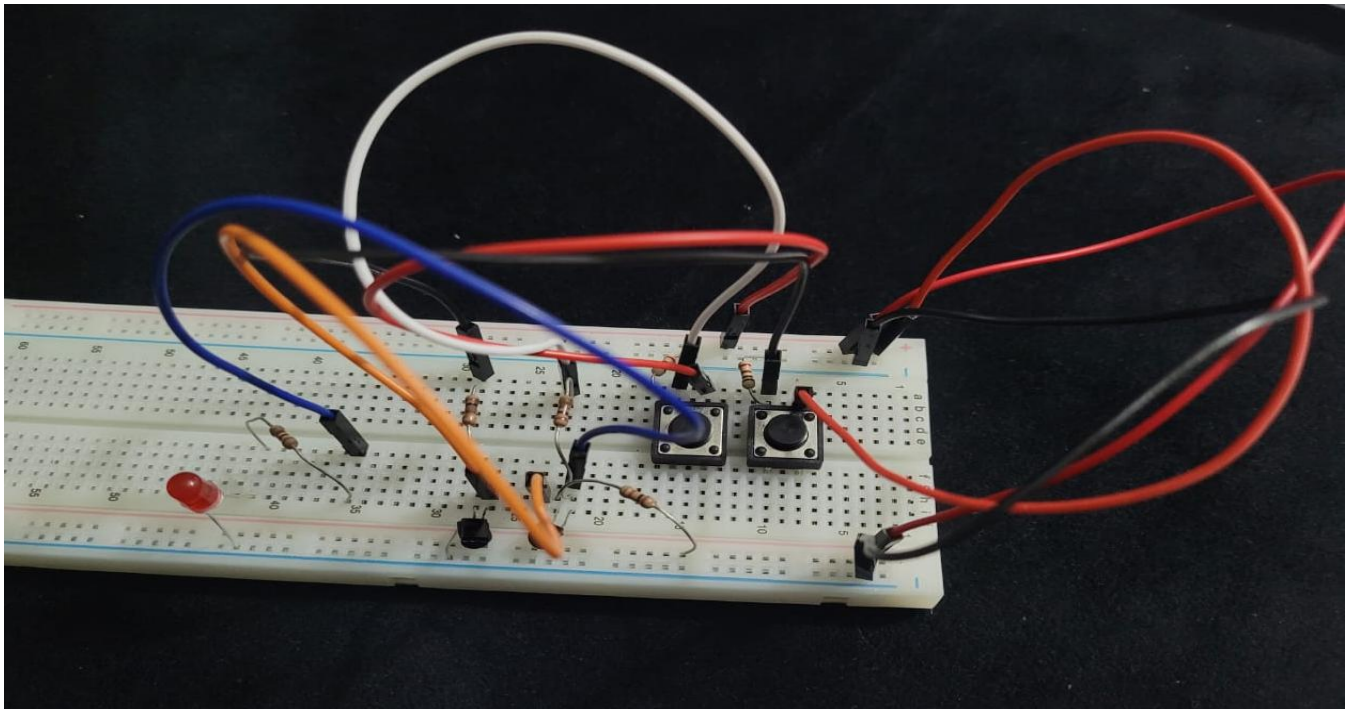
5 Hardware simulation and circuit