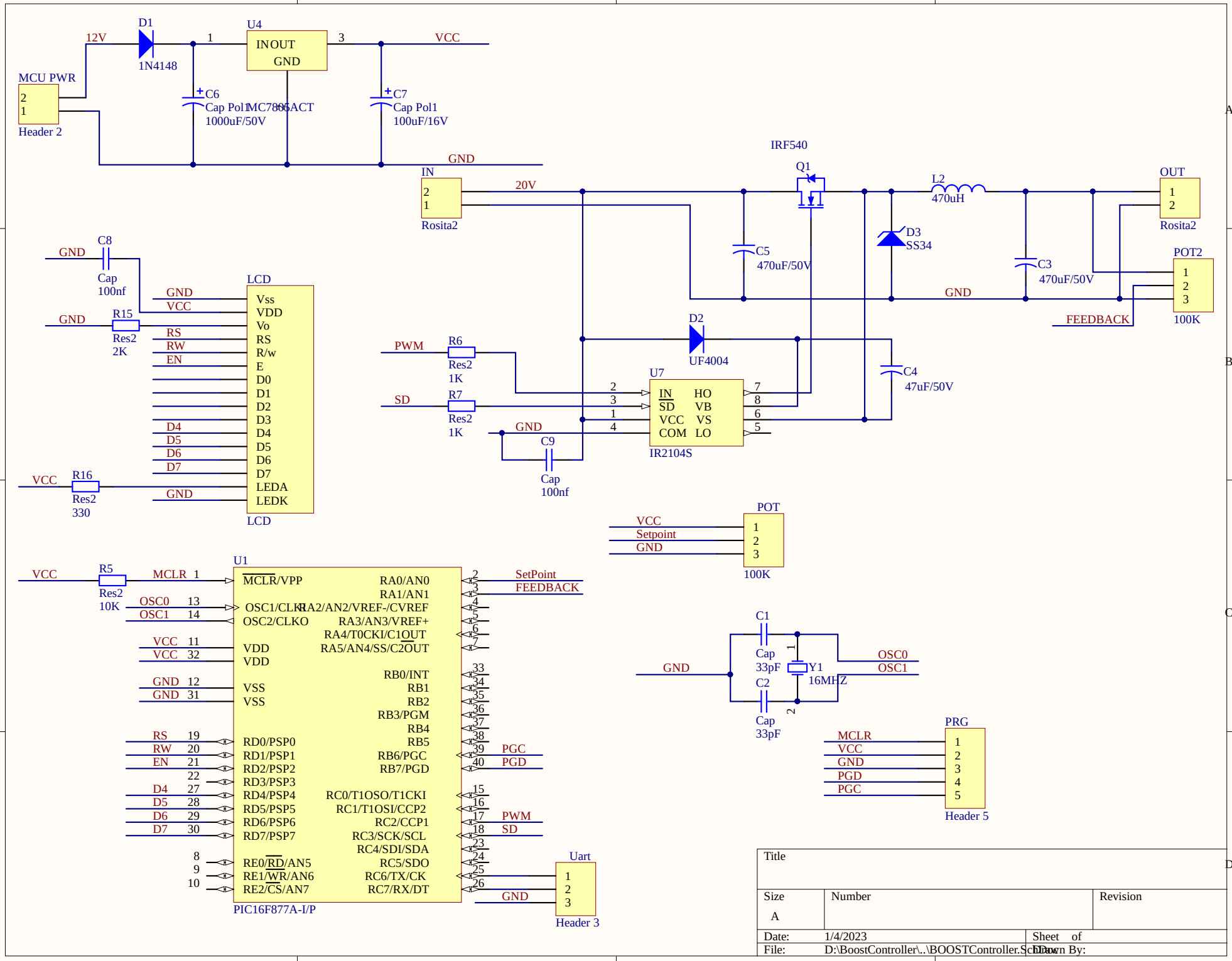
12V
D1
1N4148
U4
INOUT
GND
VCC
MCU PWR
Header 2
C6
Cap Pol1
1000uF/50V
MC7805ACT
C7
Cap Pol1
100uF/16V
GND
IN
Rosita2
20V
IRF540
Q1
L2
470uH
OUT
Rosita2
C5
470uF/50V
D3
SS34
C3
470uF/50V
POT2
100K
FEEDBACK
C8
Cap
100nf
LCD
Vss
VDD
Vo
RS
R/w
E
D0
D1
D2
D3
D4
D5
D6
D7
LEDA
LEDK
R15
Res2
2K
R16
Res2
330
PWM
R6
Res2
1K
SD
R7
Res2
1K
D2
UF4004
C4
47uF/50V
U7
IN
SD
VCC
COM
HO
VB
VS
LO
IR2104S
C9
Cap
100nf
POT
Setpoint
100K
U1
MCLR/VPP
OSC1/CLKI
OSC2/CLKO
VDD
VSS
RA0/AN0
RA1/AN1
RA2/AN2/VREF-/CVREF
RA3/AN3/VREF+
RA4/T0CKI/C1OUT
RA5/AN4/SS/C2OUT
RB0/INT
RB1
RB2
RB3/PGM
RB4
RB5
RB6/PGC
RB7/PGD
RD0/PSP0
RD1/PSP1
RD2/PSP2
RD3/PSP3
RD4/PSP4
RD5/PSP5
RD6/PSP6
RD7/PSP7
RC0/T1OSO/T1CKI
RC1/T1OSI/CCP2
RC2/CCP1
RC3/SCK/SCL
RC4/SDI/SDA
RC5/SDO
RC6/TX/CK
RC7/RX/DT
RE0/RD/AN5
RE1/WR/AN6
RE2/CS/AN7
PIC16F877A-I/P
R5
Res2
10K
SetPoint
FEEDBACK
PGC
PGD
PWM
SD
Uart
Header 3
C1
Cap
33pF
C2
Cap
33pF
Y1
16MHZ
OSC0
OSC1
PRG
Header 5
Title
Size
A
Number
Revision
Date: 1/4/2023
Sheet of
File: D:\BoostController\..\BOOSTController.SchDoc
Drawn By: