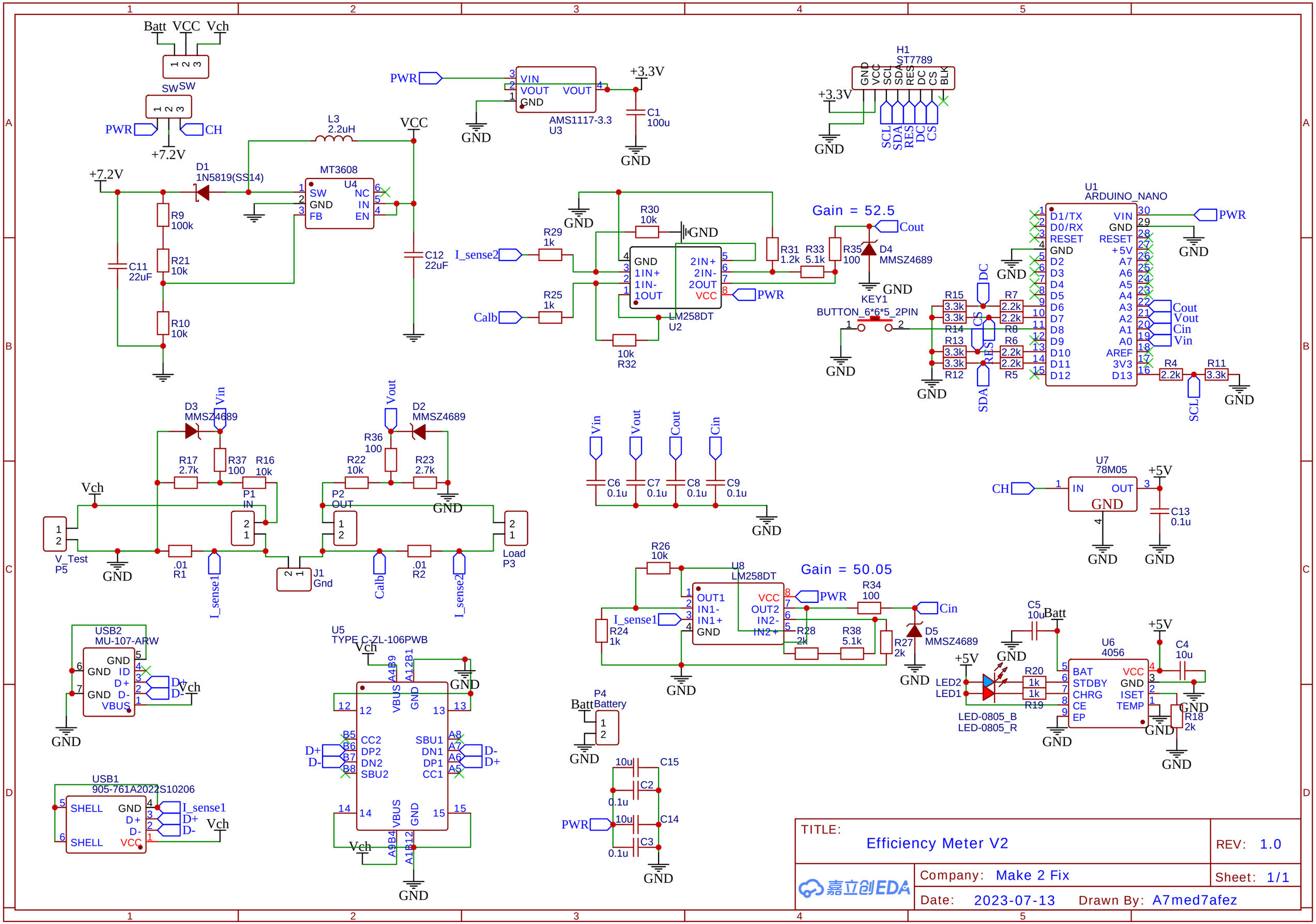
Batt VCC Vch
SW
PWR
CH
+7.2V
D1
1N5819(SS14)
L3
2.2uH
MT3608
U4
SW
GND
FB
NC
IN
EN
R9
100k
R21
10k
R10
10k
C11
22uF
C12
22uF
VCC
PWR
VIN
VOUT
GND
AMS1117-3.3
U3
+3.3V
C1
100u
H1
ST7789
GND
VCC
SCL
SDA
RES
DC
CS
BLK
R30
10k
R29
1k
R25
1k
I_sense2
Calb
LM258DT
U2
2IN+
2IN-
2OUT
1IN+
1IN-
1OUT
R32
10k
R31
1.2k
R33
5.1k
R35
100
D4
MMSZ4689
Gain = 52.5
Cout
KEY1
BUTTON_6*6*5_2PIN
U1
ARDUINO_NANO
D1/TX
D0/RX
RESET
D2
D3
D4
D5
D6
D7
D8
D9
D10
D11
D12
VIN
+5V
A7
A6
A5
A4
A3
A2
A1
A0
AREF
3V3
D13
Vout
Vin
R15
R14
R13
R12
R7
R8
R6
R5
R4
R11
3.3k
2.2k
D3
MMSZ4689
D2
MMSZ4689
R17
2.7k
R37
100
R16
10k
R36
100
R22
10k
R23
2.7k
P1
IN
P2
OUT
V_Test
P5
.01
R1
.01
R2
J1
Gnd
Load
P3
C6
0.1u
C7
0.1u
C8
0.1u
C9
0.1u
U7
78M05
IN
OUT
C13
0.1u
R26
10k
U8
LM258DT
Gain = 50.05
OUT1
IN1-
IN1+
VCC
OUT2
IN2-
IN2+
R34
100
R24
1k
R28
2k
R38
5.1k
R27
2k
D5
MMSZ4689
C5
10u
Batt
U6
4056
BAT
STDBY
CHRG
CE
EP
VCC
GND
ISET
TEMP
C4
10u
R18
2k
R20
1k
R19
1k
LED2
LED1
LED-0805_B
LED-0805_R
USB2
MU-107-ARW
ID
D+
D-
VBUS
USB1
905-761A2022S10206
SHELL
VCC
U5
TYPE C-ZL-106PWB
A4B9
A12B1
VBUS
GND
CC2
DP2
DN2
SBU2
SBU1
DN1
DP1
CC1
A9B4
A1B12
P4
Battery
C15
C14
C2
C3
10u
0.1u
TITLE:
Efficiency Meter V2
REV: 1.0
Company: Make 2 Fix
Sheet: 1/1
Date: 2023-07-13
Drawn By: A7med7afez
嘉立创EDA