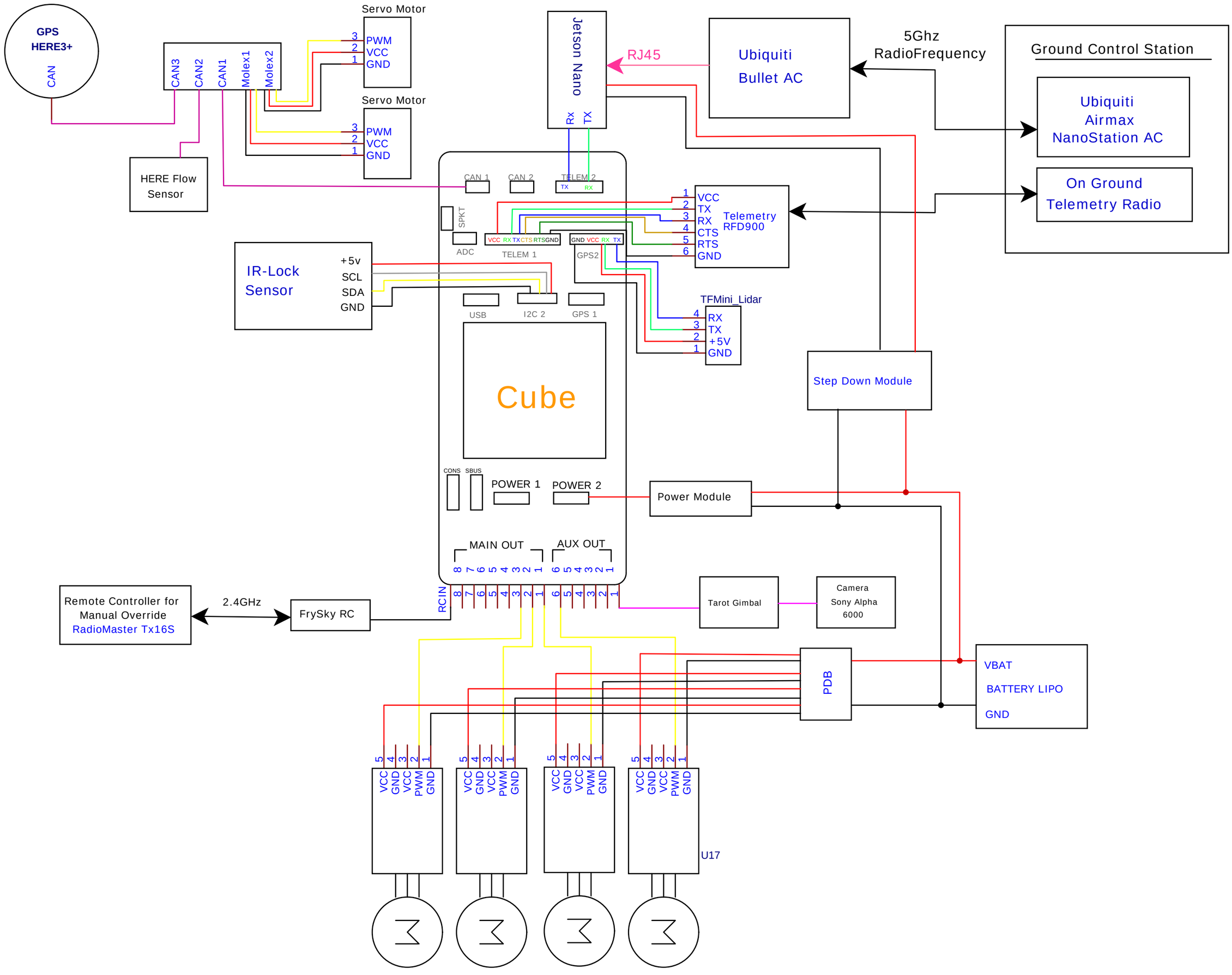

TITLE: Task3_Diagram		REV:
嘉立创EDA	Company: Eagles	Sheet: 1/1
	Date:	Drawn By: AhmedSaleh