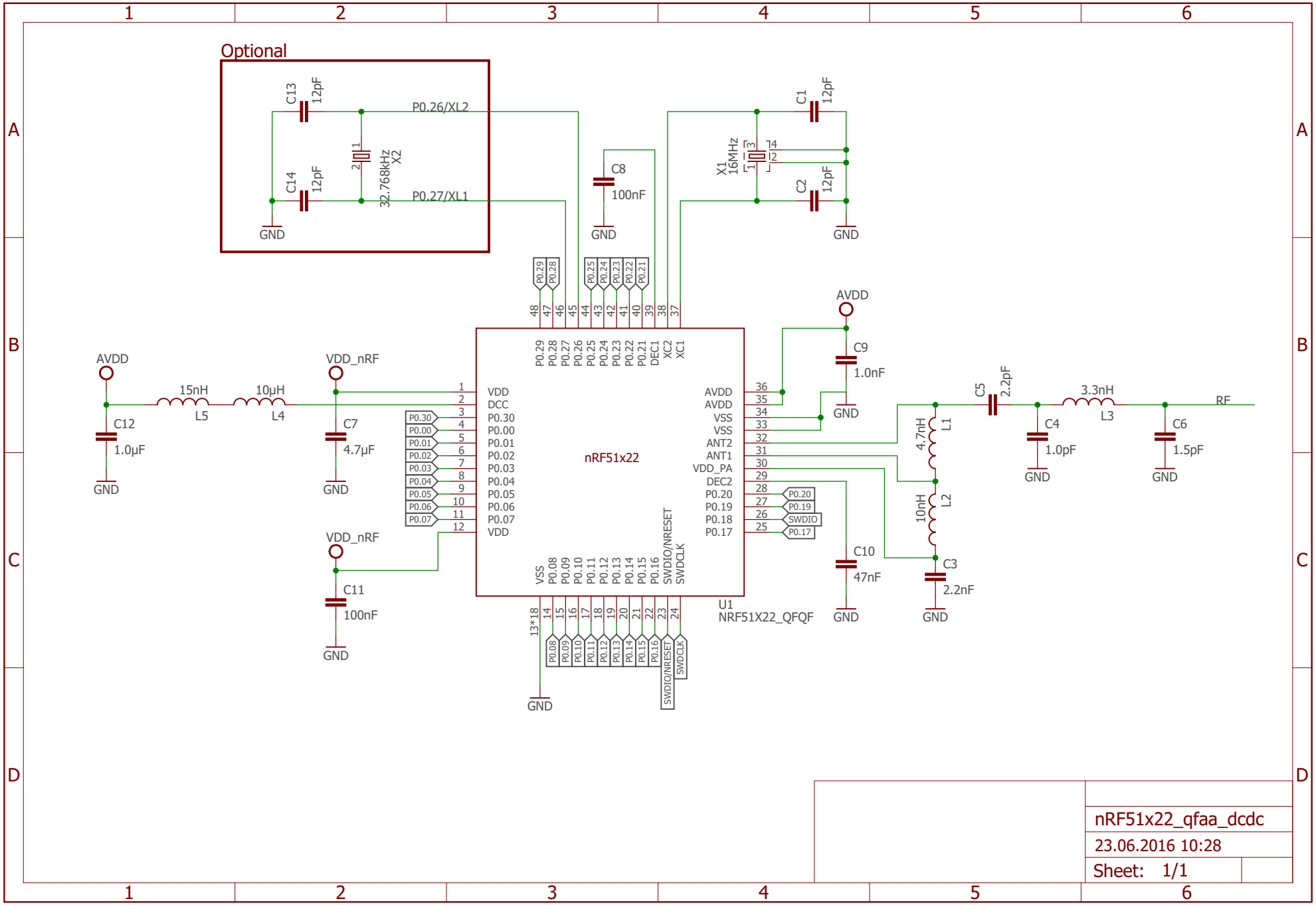

nRF51x22_qfaa_dcdc

23.06.2016 10:28

Sheet: 1/1