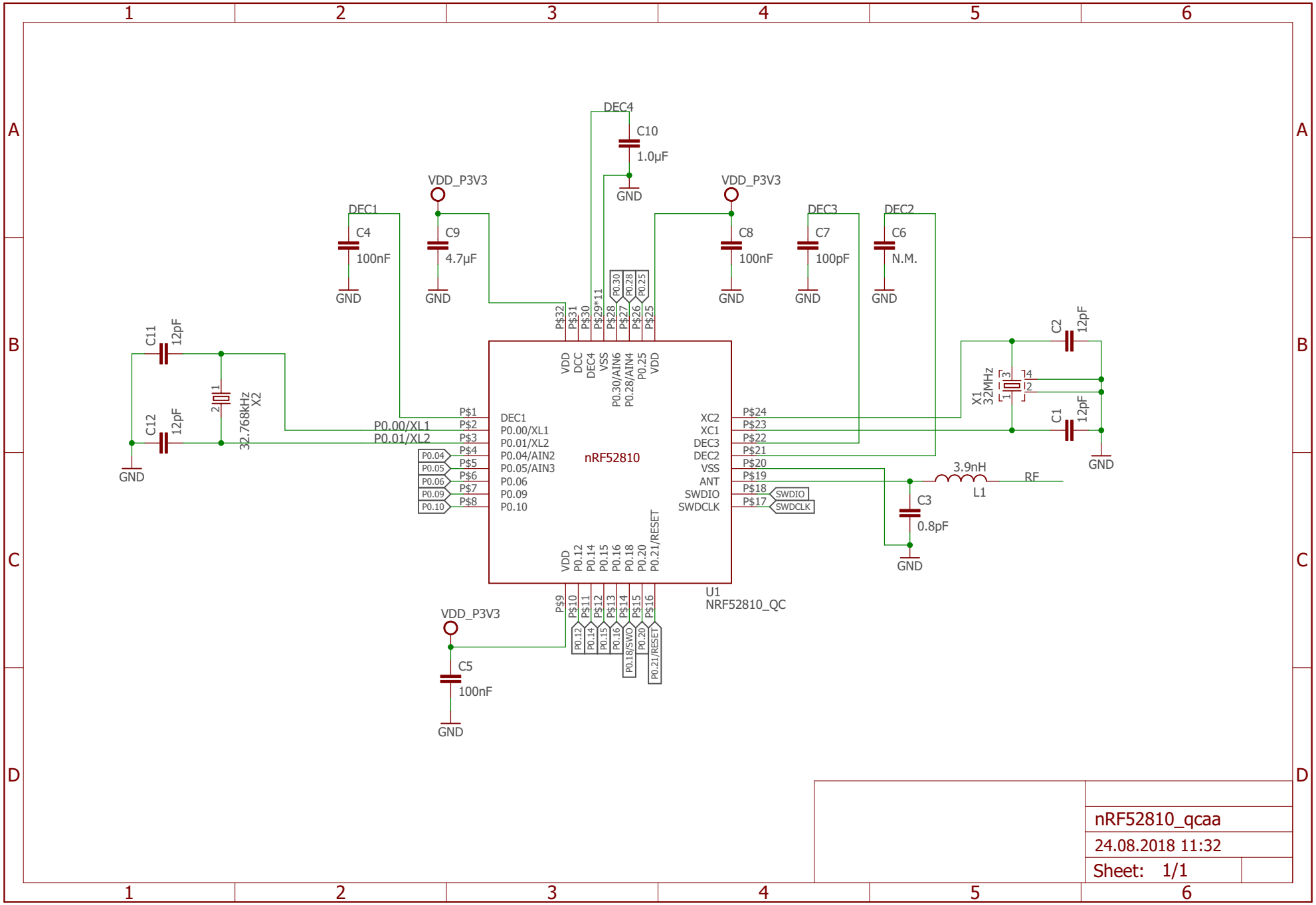
DEC4
C10
1.0µF
GND
VDD_P3V3
DEC1
C4
100nF
C9
4.7µF
VDD_P3V3
C8
100nF
DEC3
C7
100pF
DEC2
C6
N.M.
C11
12pF
C12
12pF
X2
32.768kHz
P0.00/XL1
P0.01/XL2
nRF52810
U1
NRF52810_QC
XC2
XC1
DEC3
DEC2
VSS
ANT
SWDIO
SWDCLK
DEC1
P0.00/XL1
P0.01/XL2
P0.04/AIN2
P0.05/AIN3
P0.06
P0.09
P0.10
VDD
DCC
DEC4
VSS
P0.30/AIN6
P0.28/AIN4
P0.25
VDD
VDD
P0.12
P0.14
P0.15
P0.16
P0.18
P0.20
P0.21/RESET
C2
12pF
X1
32MHz
C1
12pF
3.9nH
L1
RF
C3
0.8pF
VDD_P3V3
C5
100nF
nRF52810_qcaa
24.08.2018 11:32
Sheet: 1/1