PHAROS UNIVERSITY IN ALEXANDRIA
Department of Construction Engineering and Management
KTH ROYAL INSTITUTE OF TECHNOLOGY

Steel Bridge

CONTENT

01 Project Objective

02 Architecture

02 Structure System

03 Managment

04 Field Pictures

05 Conclusion

Pharos University in Alexandria
Faculty of Engineering
Department of Construcion and Mangment

Project Objective

Google Maps

Google Earth

Cairo, Egypt
Nasr City

Pharos University in Alexandria
Faculty of Engineering
Department of Construcion and Mangment

General Information

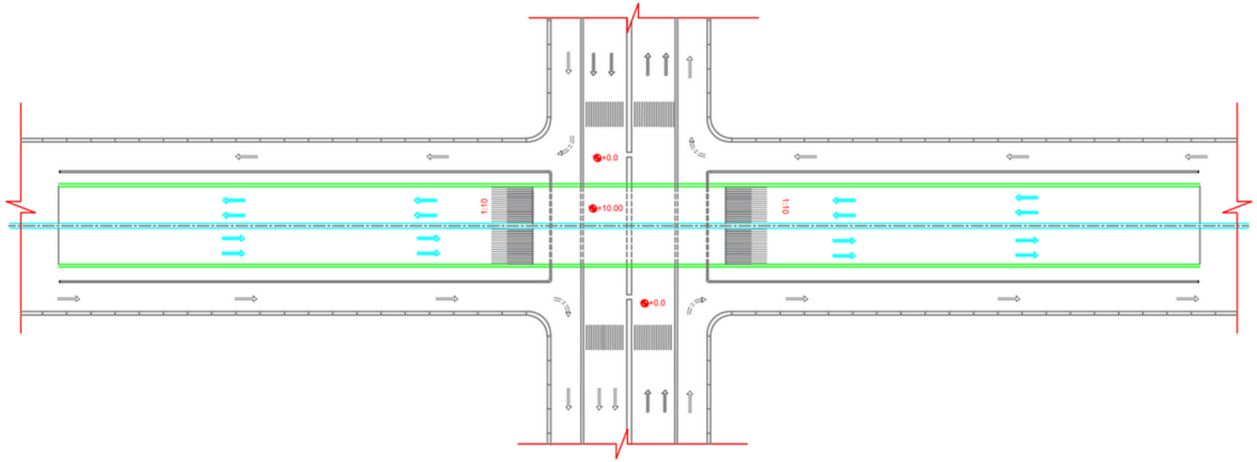

Site Plan

- 4 Lanes (Span = 16m)
- Top Level = 10 m
- Clear Height = 7.5 m
- Inclined Slope = 1:10

Site 3D

Pharos University in Alexandria
Faculty of Engineering
Department of Construcion and Mangment

3D Modeling

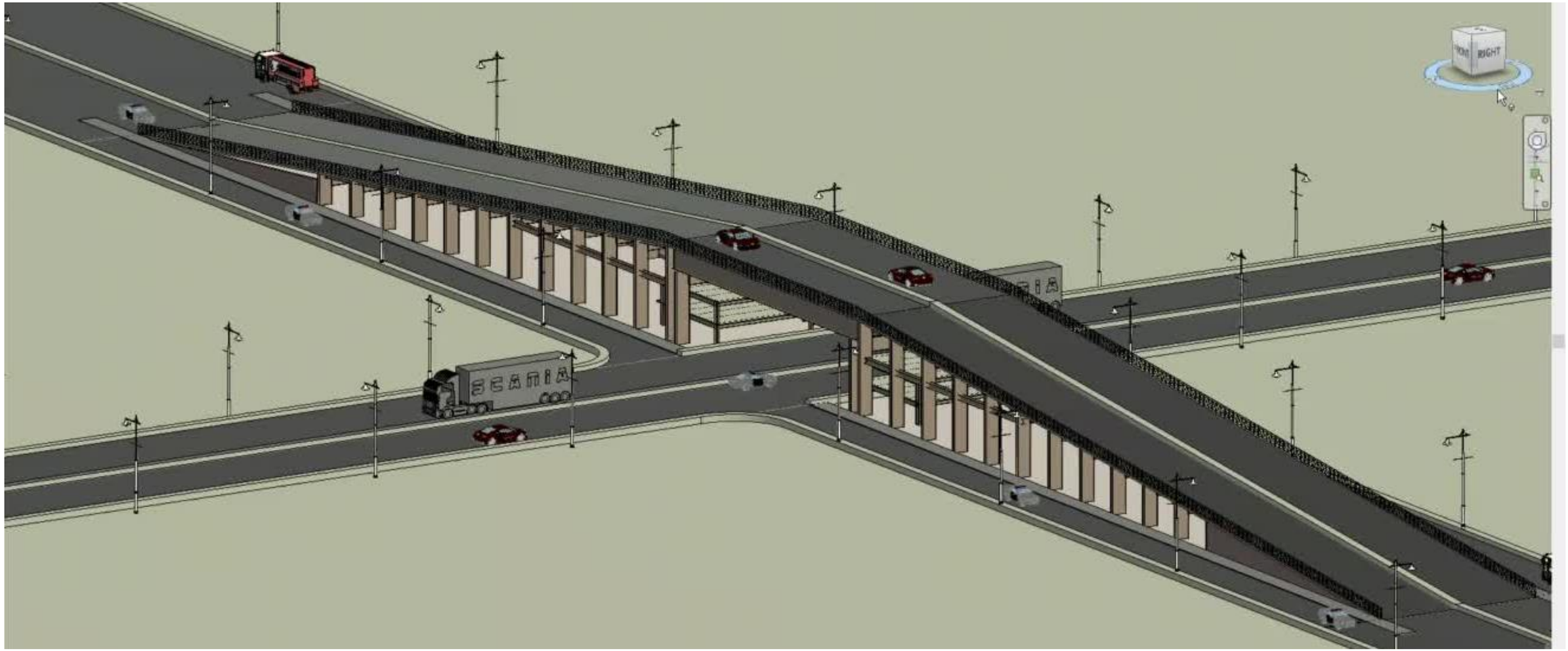

Architecture

Pharos University in Alexandria
Faculty of Engineering
Department of Construcion and Mangment

- **Ground Floor Plan**

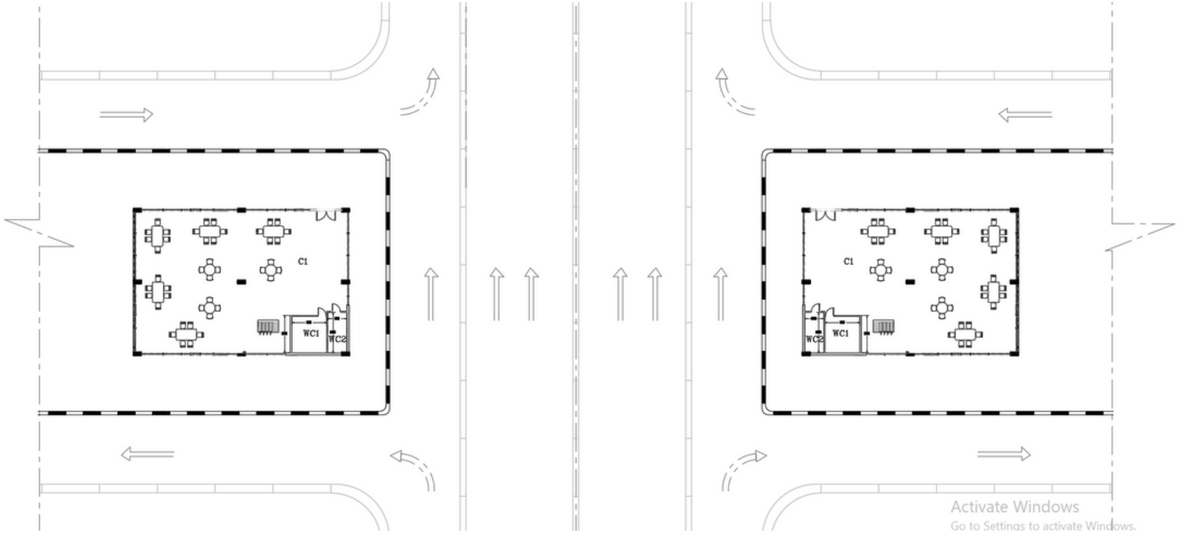

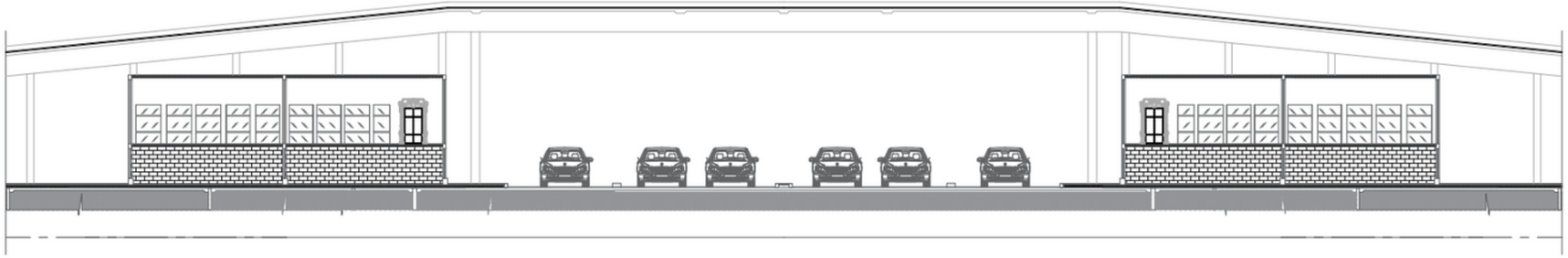

- **Side View**

- **Architecture 3D**

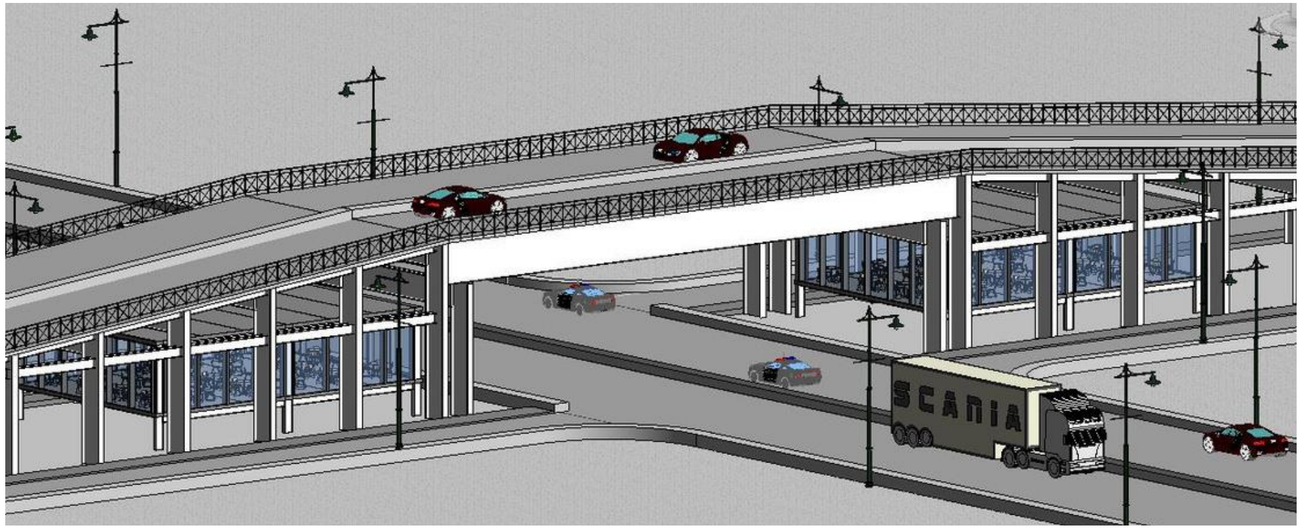

Pharos University in Alexandria
Faculty of Engineering
Department of Construcion and Mangment

Structure System

Graduation Project 2022-2023

Pharos University in Alexandria
Faculty of Engineering
Department of Construcion and Mangment

General Layout

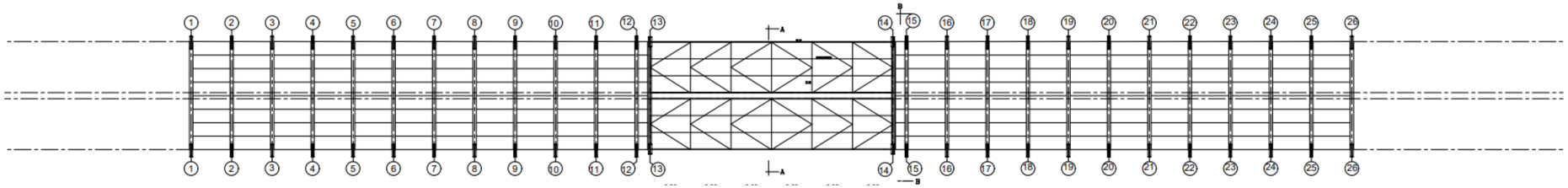

- **Roof Plan**

- **Side View**

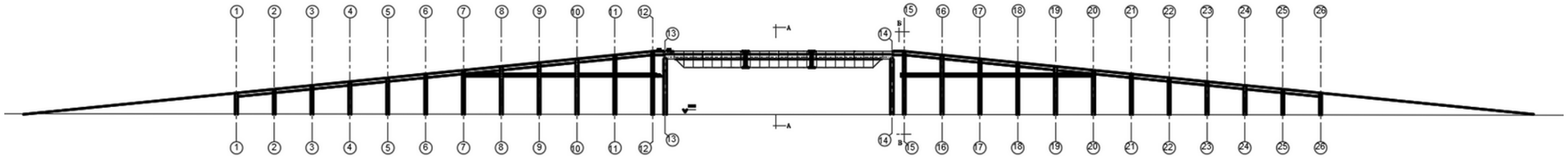

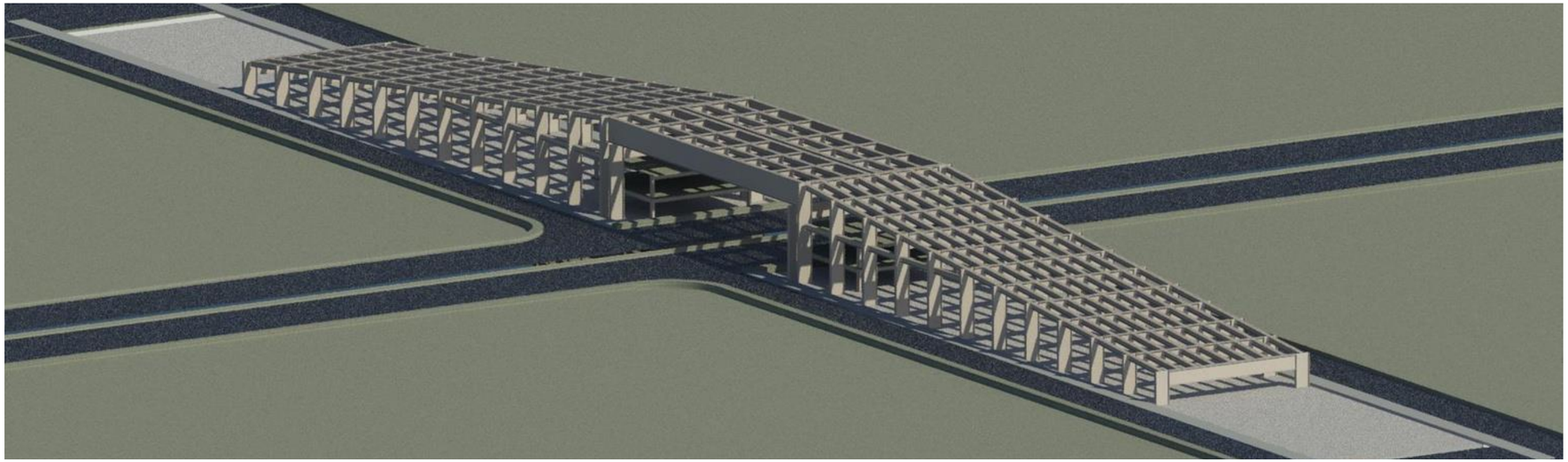

- **Structural 3D**

Our Project is Divided into 3 Parts

1st: Inclined Part

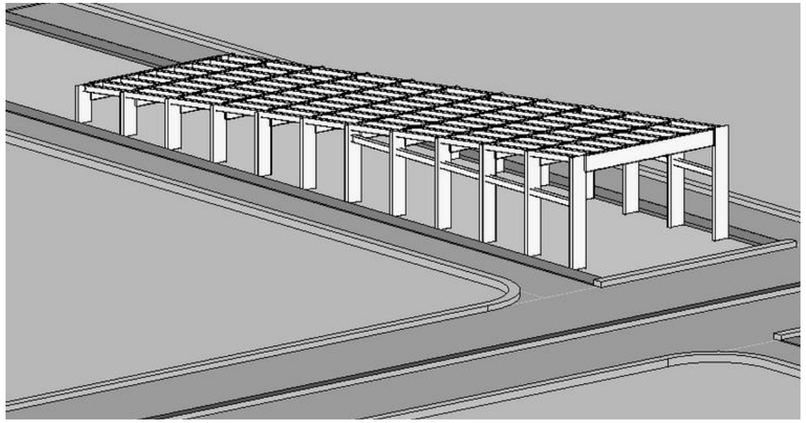

2nd: Deck Part

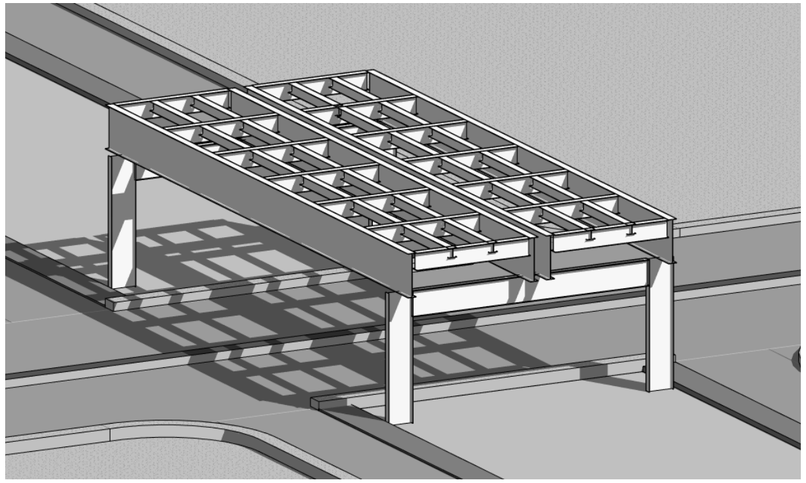

3rd: Mezzanine Floor

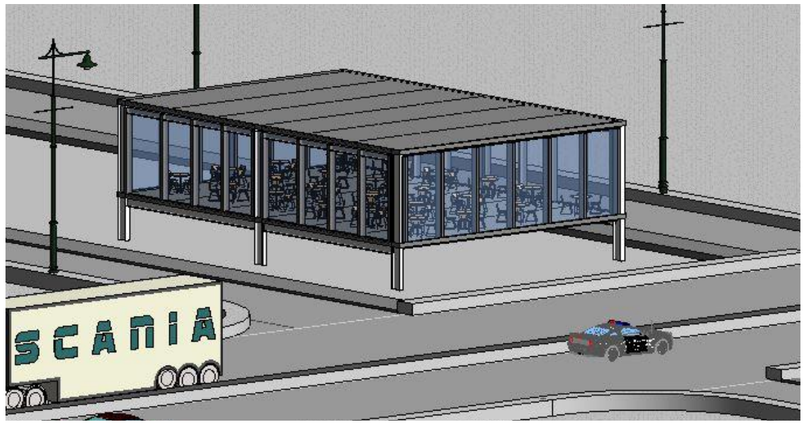

Loads & allowable stresses

Primary Loads:
Dead Load , Live Load & Fatigue Effect

Secondary Loads:
Wind Load , braking Force , shrinkage ...etc

Live loads on roadway bridges are taken according to the Egyptian code of practice for loads and forces ECP-201

Table (1) Live loads on different lanes for Roadway Bridges (ECP-201)

Lane Number	Vehicle load (tons)	Wheel load (tons)	Uniform load over the total area of the lane	width of each lane
Lane No. (1)	60 t	15 t	900 Kg/m^2	3.00 m
Lane No. (2)	40 t	10 t	250 Kg/m^2	
Lane No. (3)	20 t	5 t	250 Kg/m^2	
The rest area	---	---	250 Kg/m^2	

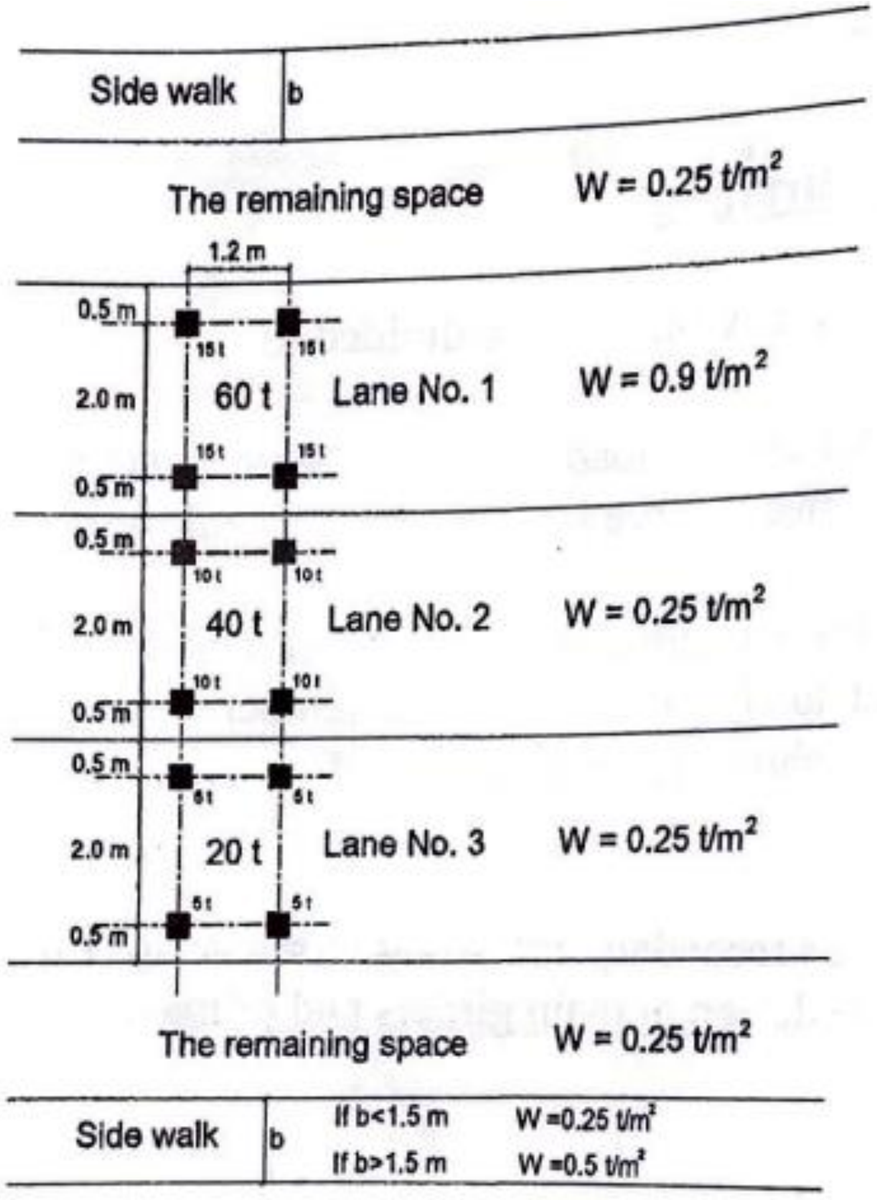

Live loads on roadway bridges - Case (1)

Inclined Part

- 12 Portal Frames
- Incline Slope 1:10
- Spacing = 6 m
- Stringer Spacing = 2 m
- Span between frame = 16 m

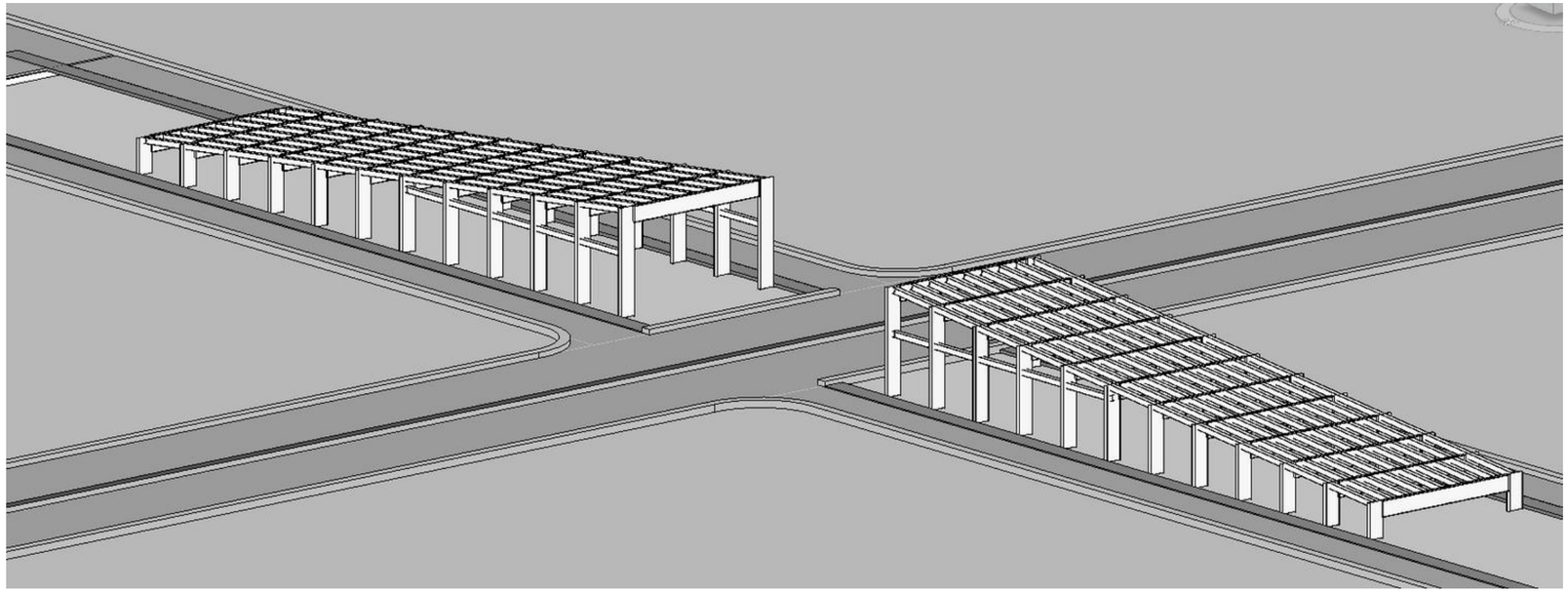

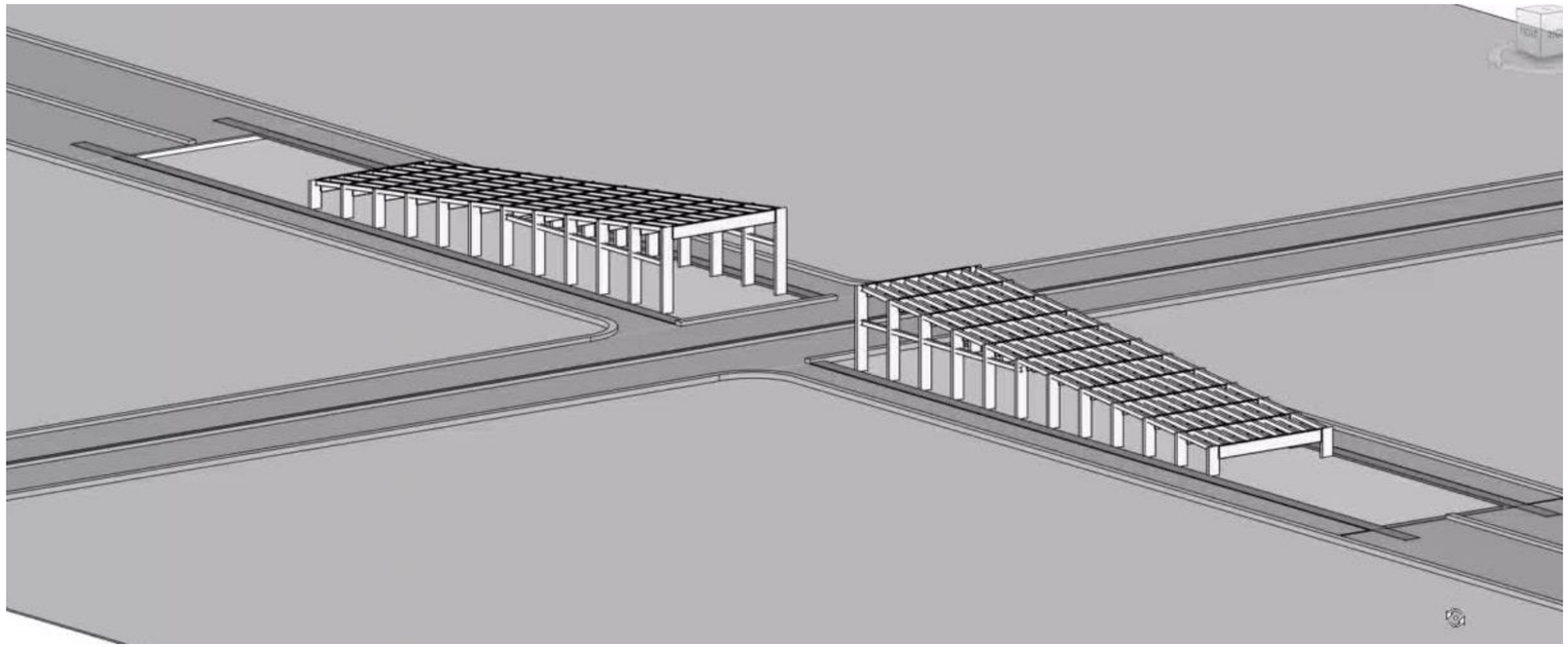

Pharos University in Alexandria
Faculty of Engineering
Department of Construcion and Mangment

Live load Distribution

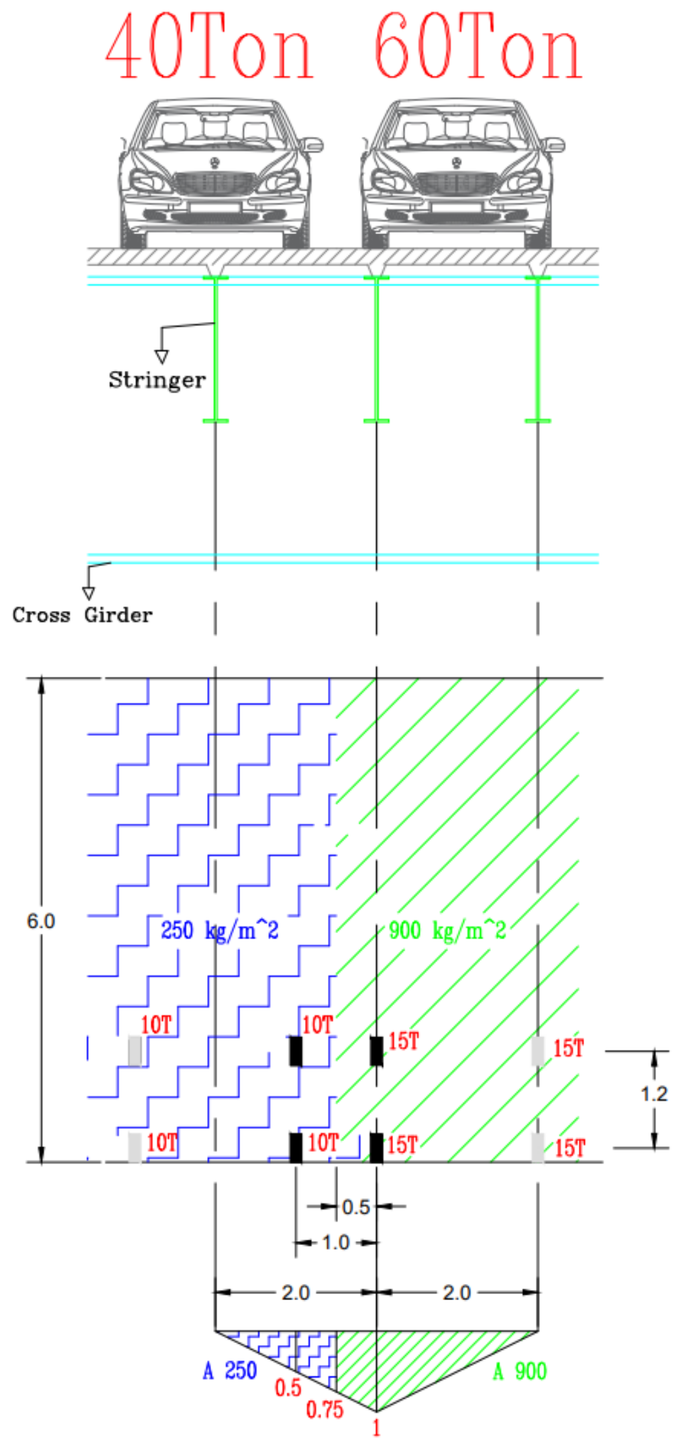

Inclined Part

Stringer Design

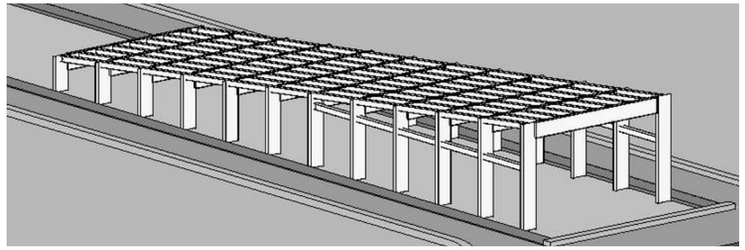

Max Moment Case (LL)

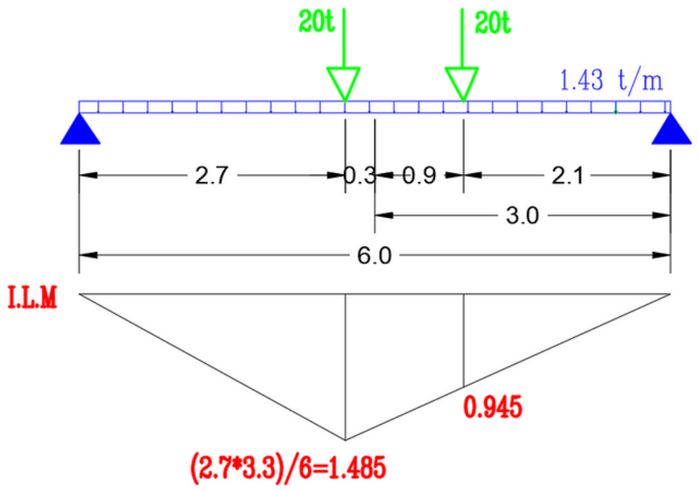

Max Shear Case (LL)

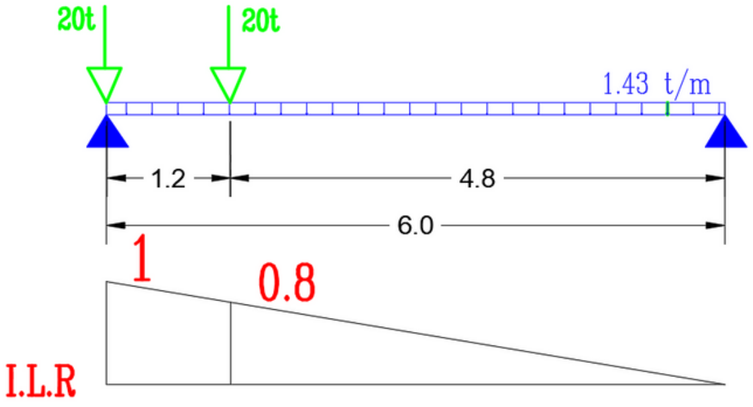

Inclined Part

Stringer Design

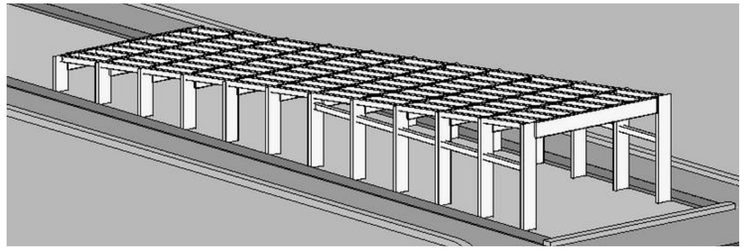

Design values

Moment maximum =55.8 t.m

Moment maximum fatigue =36 t.m

Shear Q maximum =45.15t

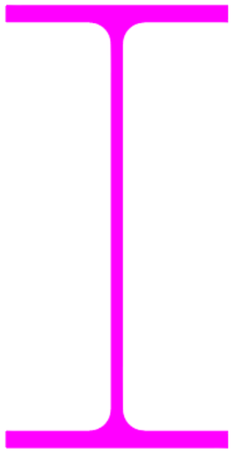

IPE 600

Pharos University in Alexandria
Faculty of Engineering
Department of Construcion and Mangment

Inclined Part

Frame Design

Loading as X Girder

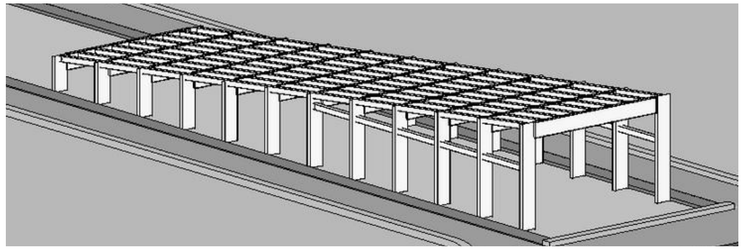

Live load Distribution

Case 1

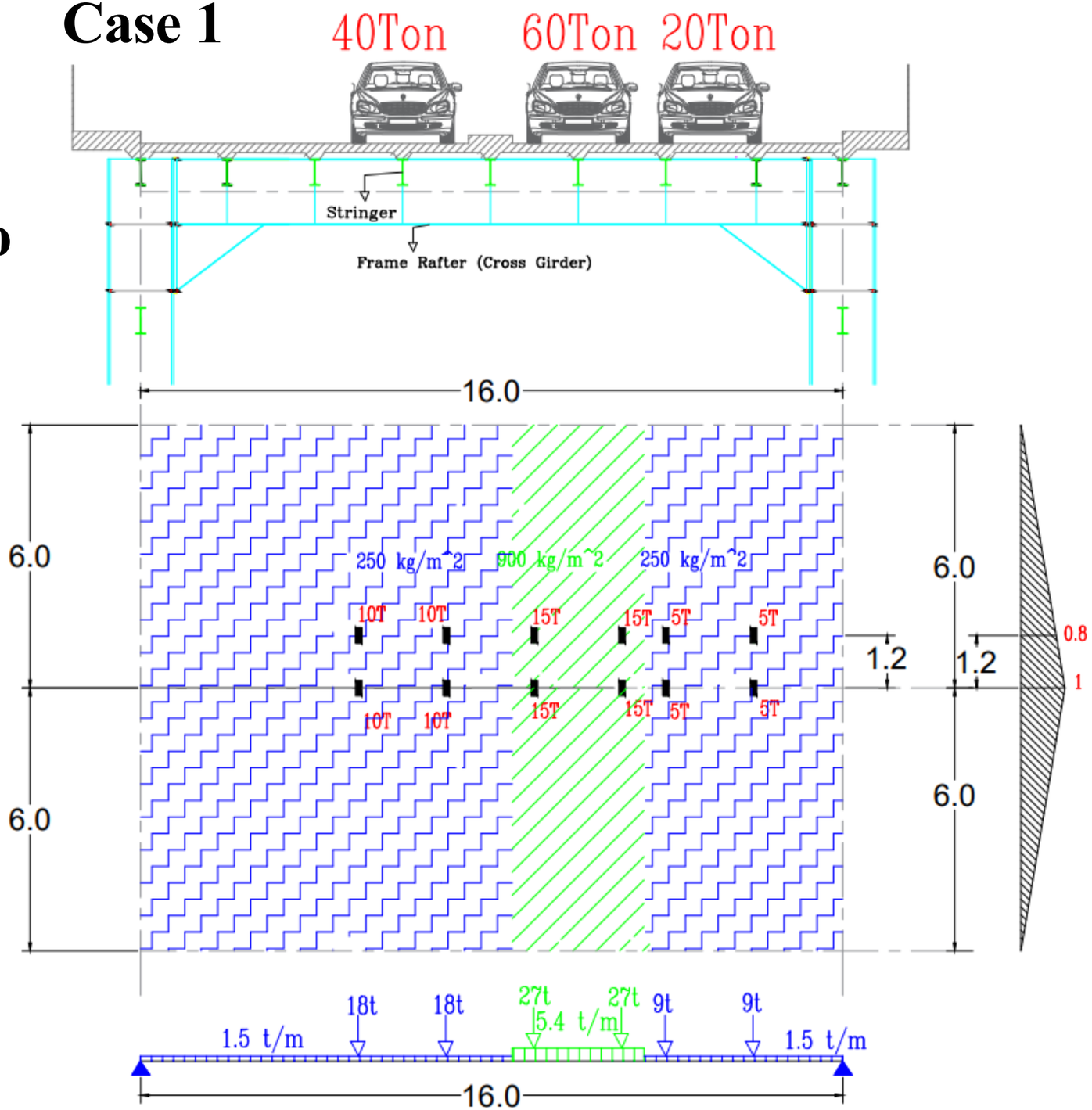

Pharos University in Alexandria
Faculty of Engineering
Department of Construcion and Mangment

Inclined Part

Frame Design

Loading as X Girder

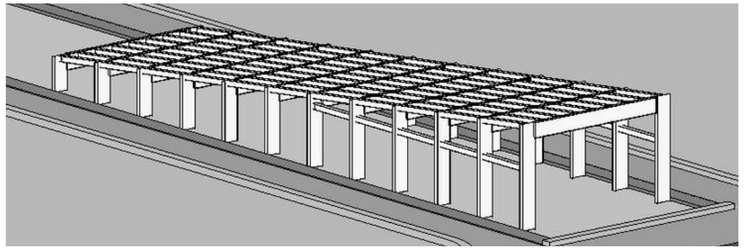

Live load Distribution

Case 2

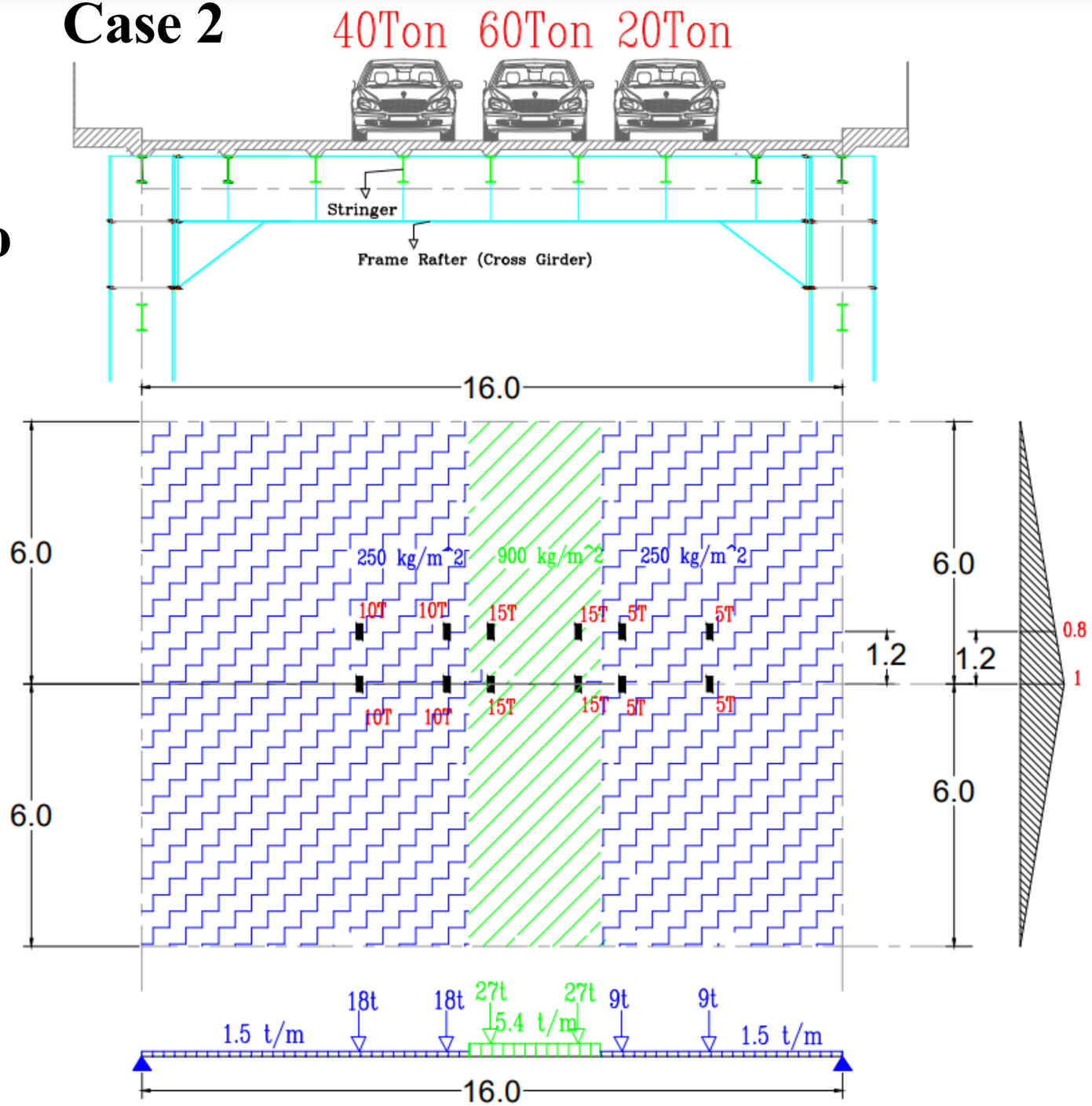

Pharos University in Alexandria
Faculty of Engineering
Department of Construcion and Mangment

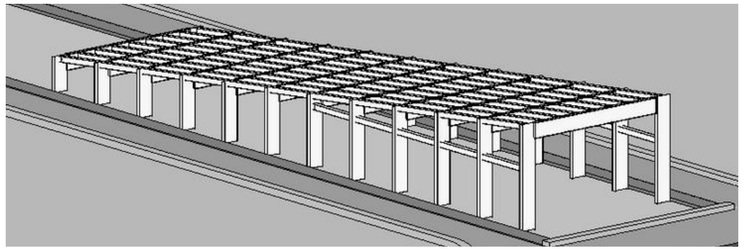

Inclined Part

Frame Design

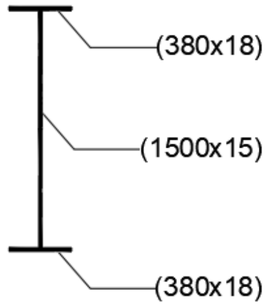

Rafter Section

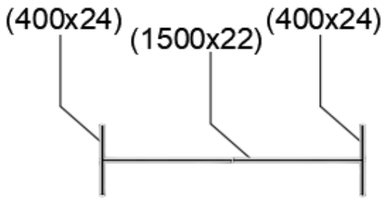

Coulmn Section

Max Moment Case

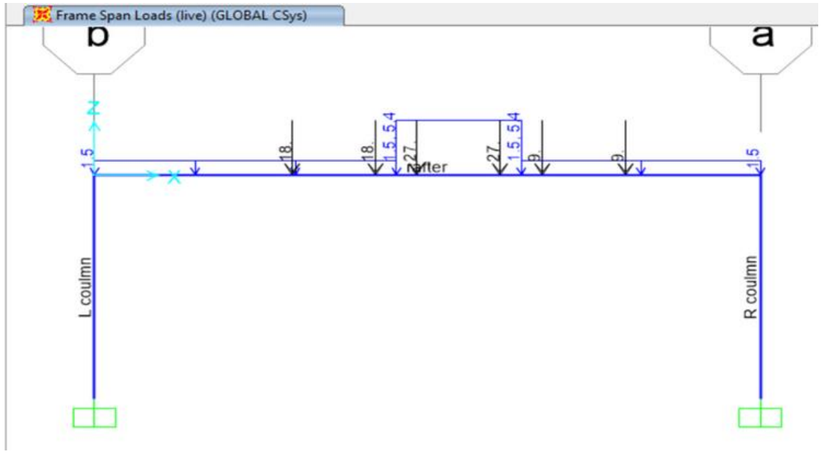

MAX moment at H=10m					
Frame	Station	OutputCase	N	Q	M
Text	m	Text	Tonf	Tonf	Tonf-m
column L	10	DL+LL	-105.4476	39.7817	264.2801
column L	10	DL+LL	-105.4476	39.7817	-133.537
coulmn R	0	DL+LL	-110.2524	-39.7817	-266.943
coulmn R	10	DL+LL	-110.2524	-39.7817	130.8739
rafter	0	DL+LL	-39.7817	-105.4476	-264.28
rafter	7.75	DL+LL	-39.7817	-20.9976	300.264
rafter	16	DL+LL	-39.7817	110.2524	-266.943

Max Shear Case

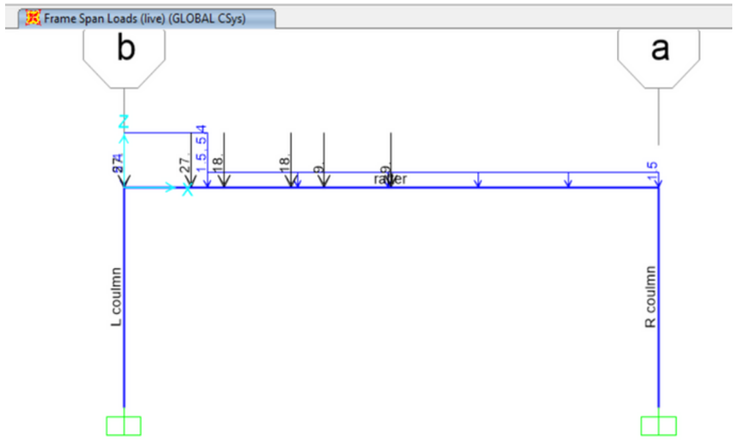

MAX Shear at H=10m					
Frame	Station	OutputCase	N	Q	M
Text	m	Text	Tonf	Tonf	Tonf-m
column L	0	DL+LL	-146.0915	27.9088	197.16574
column L	10	DL+LL	-146.0915	27.9088	-81.92243
coulmn R	0	DL+LL	-67.6585	-27.9088	-175.51346
coulmn R	10	DL+LL	-67.6585	-27.9088	103.57471
rafter	0	DL+LL	-27.9088	-119.0915	-197.16574
rafter	7.75	DL+LL	-27.9088	7.6585	178.33338
rafter	16	DL+LL	-27.9088	67.6585	-175.51346

Pharos University in Alexandria
Faculty of Engineering
Department of Construcion and Mangment

Inclined Part

Shop Drawings

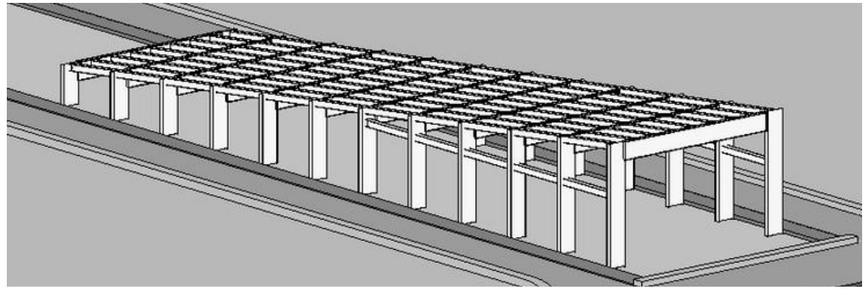

Drawing Title:
Left Column of frame at 10 m

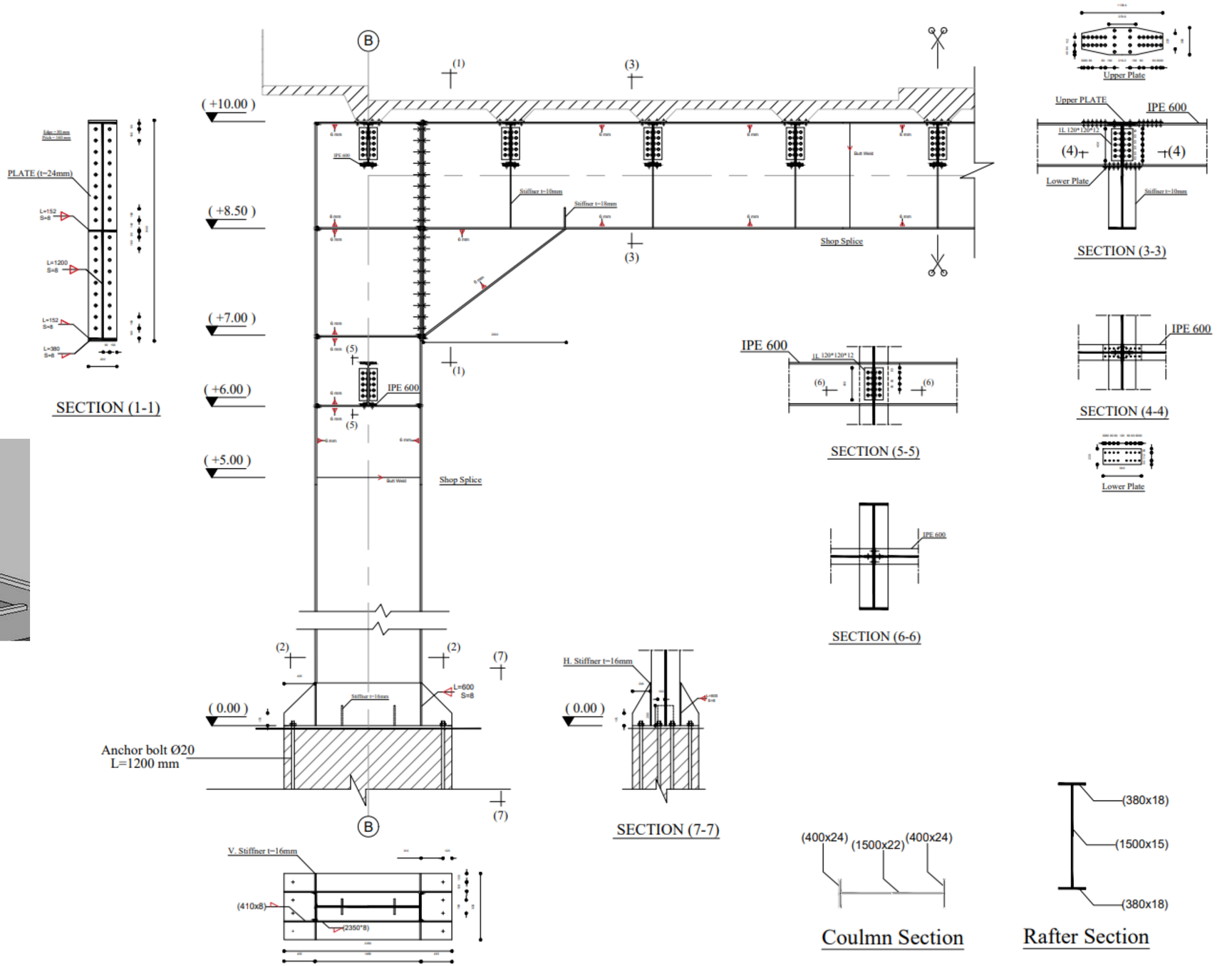

Graduation Project 2022-2023

Pharos University in Alexandria
Faculty of Engineering
Department of Construcion and Mangment

Deck Bridge Part
First Trial

- Multi main Girder System
- Resting On Portal Frame
- Main Girder Span = 36 m
- Stringer Spacing = 2.5 m
- Cross Girder Spacing = 6 m

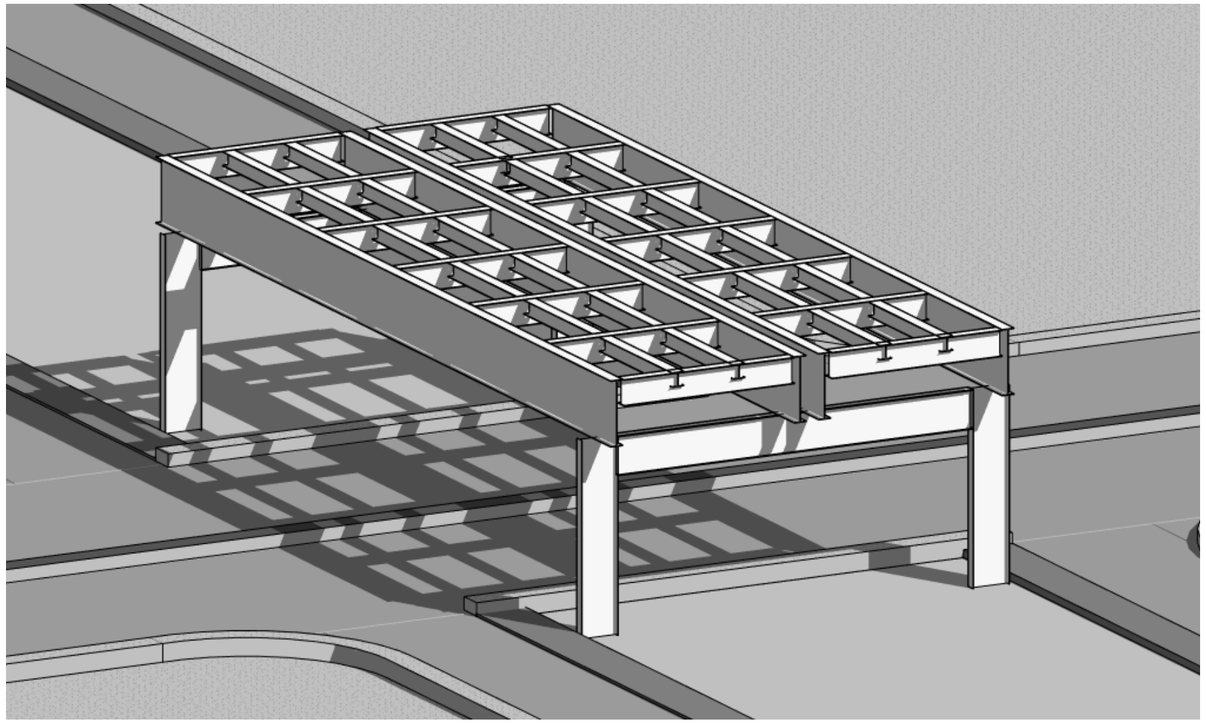

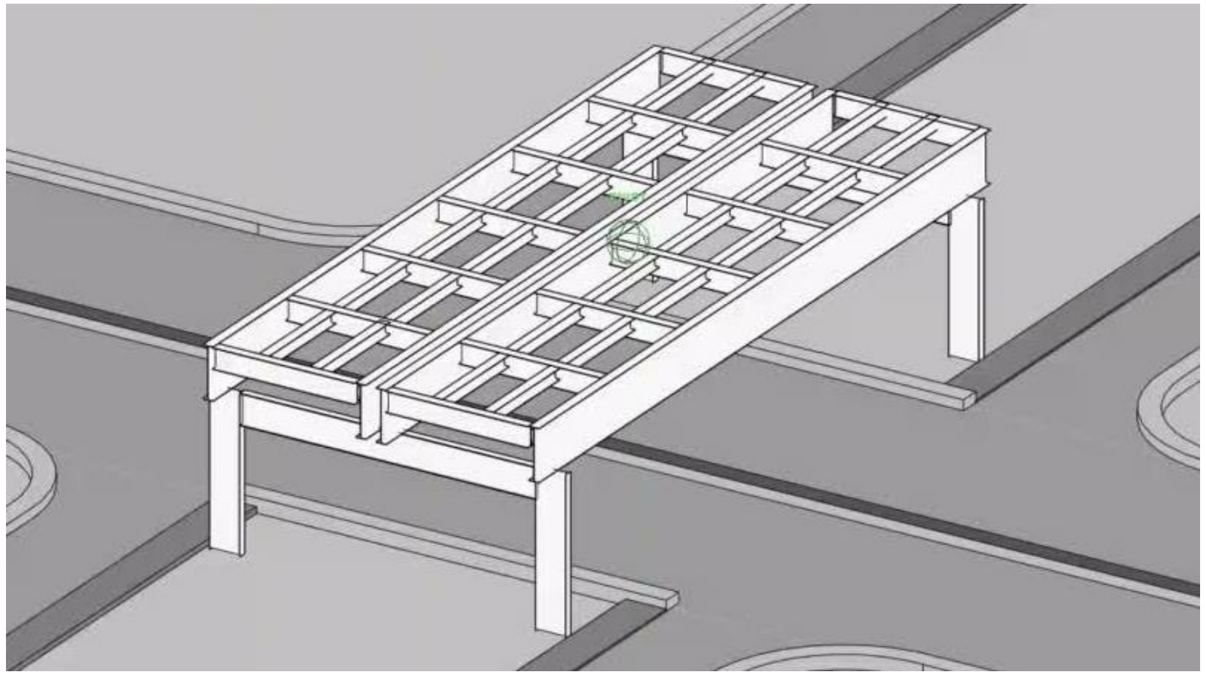

Pharos University in Alexandria
Faculty of Engineering
Department of Construcion and Mangment

Live load Distribution

Deck Bridge Part First Trial

Stringer Design

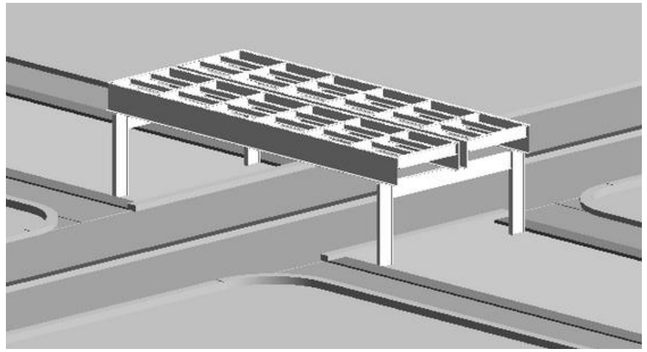

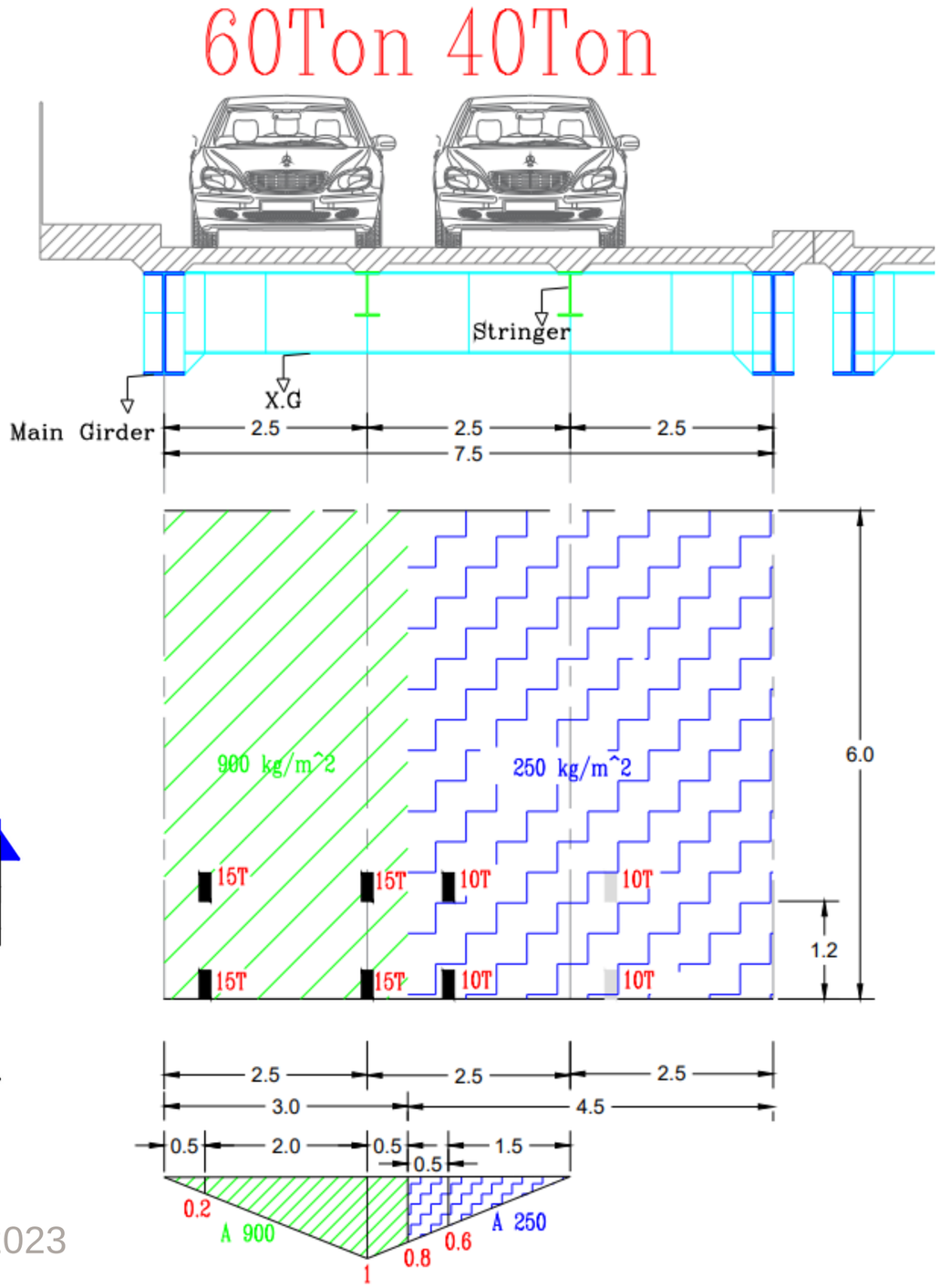

Max Moment Case (LL)

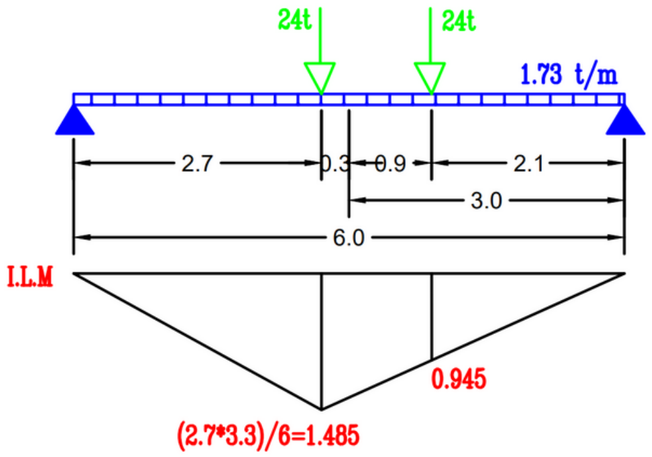

Max Shear Case (LL)

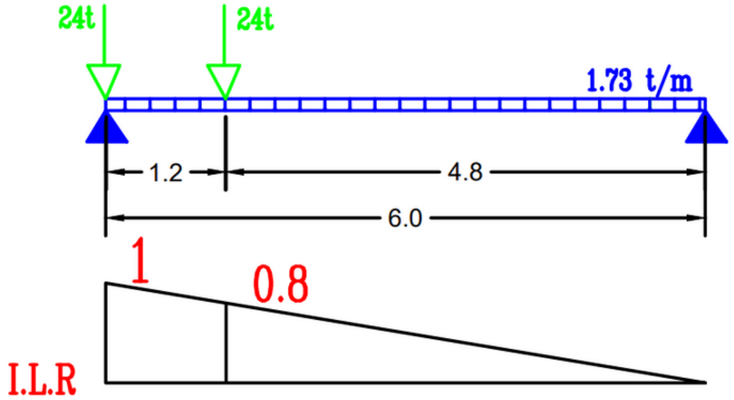

Pharos University in Alexandria
Faculty of Engineering
Department of Construcion and Mangment

Deck Bridge Part First Trial

Stringer Design

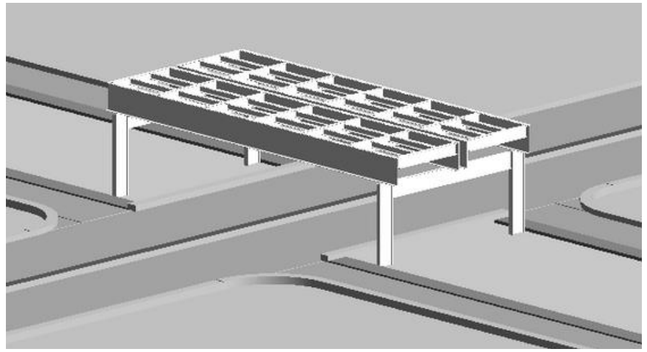

Design values

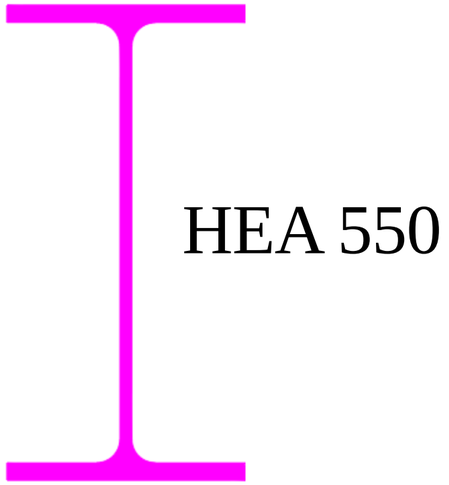

Moment maximum =68 t.m

Moment maximum fatigue =44.24 t.m

Shear Q maximum =54.76 t

Pharos University in Alexandria
Faculty of Engineering
Department of Construcion and Mangment

Live load Distribution

Deck Bridge Part First Trial

Cross Girder Design

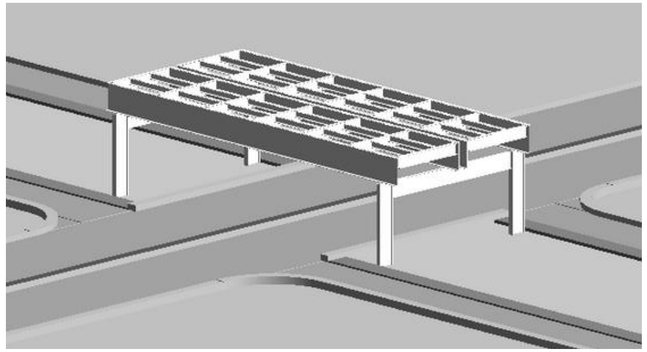

Max Moment Case (LL)

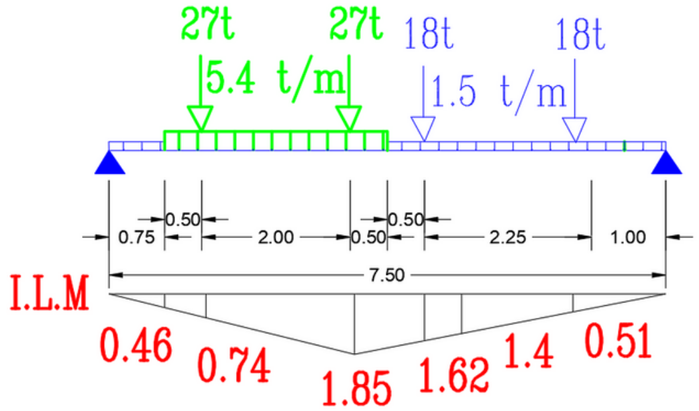

Max Shear Case (LL)

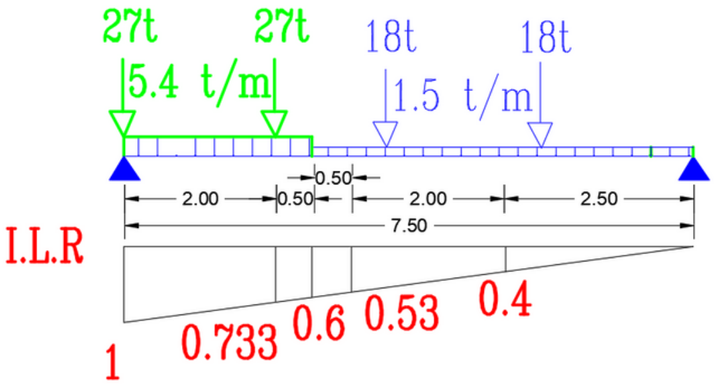

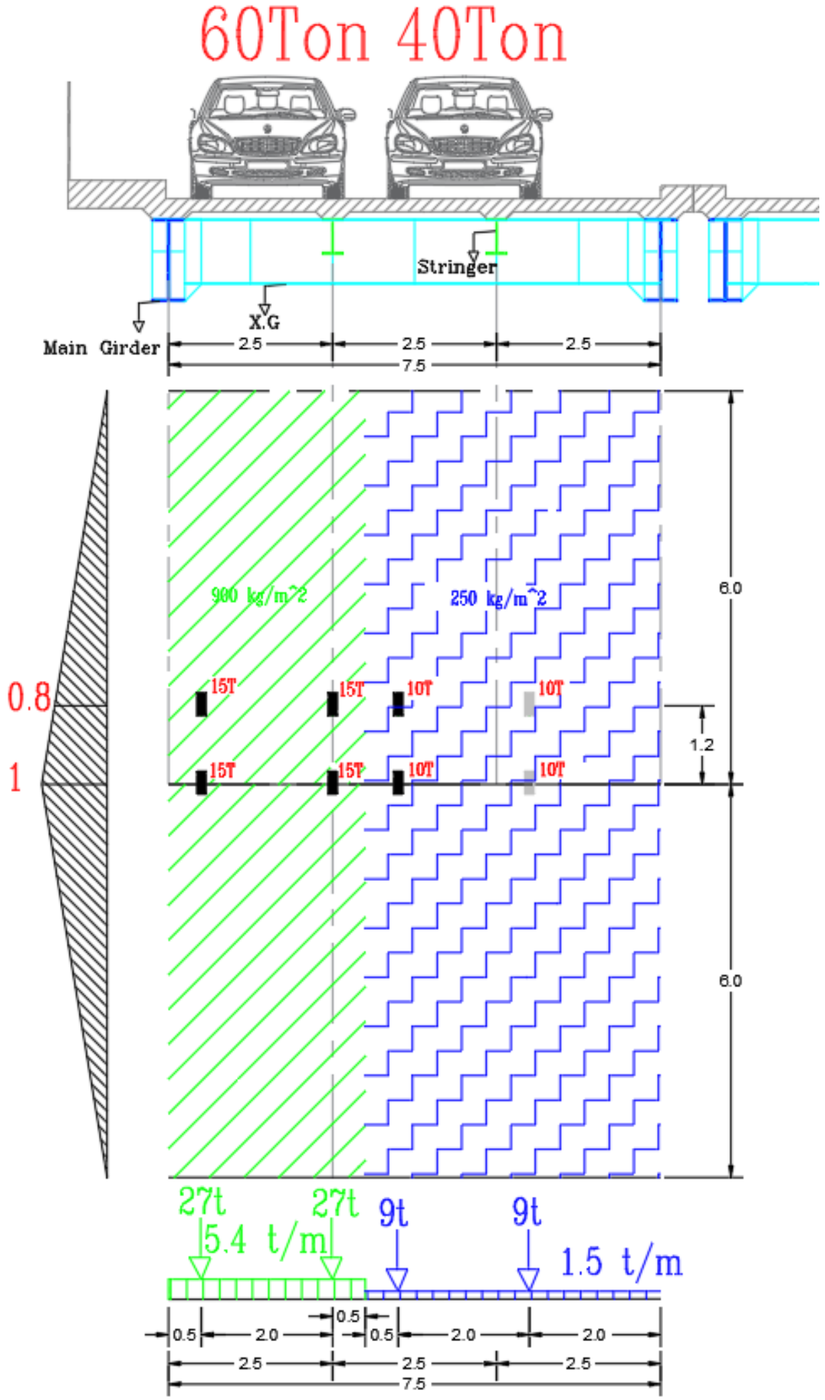

Deck Bridge Part First Trial

Cross Girder Design

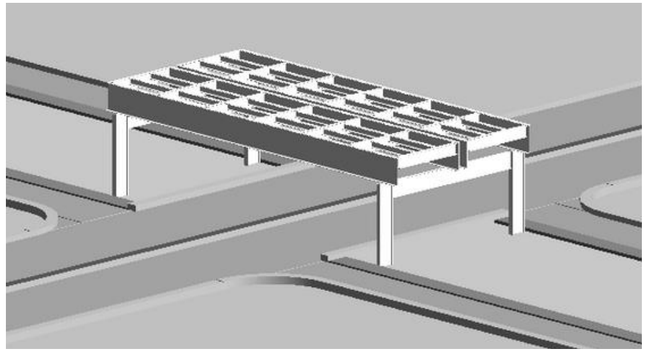

Design values

Moment maximum =160.6 t.m

Moment maximum fatigue =129 t.m

Shear Q maximum =95.3 t

Built up Section

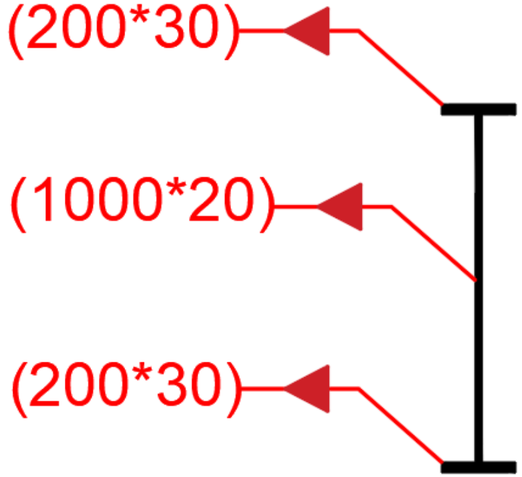

Pharos University in Alexandria
Faculty of Engineering
Department of Construcion and Mangment

Live load Distribution

Deck Bridge Part First Trial

Main Girder Design

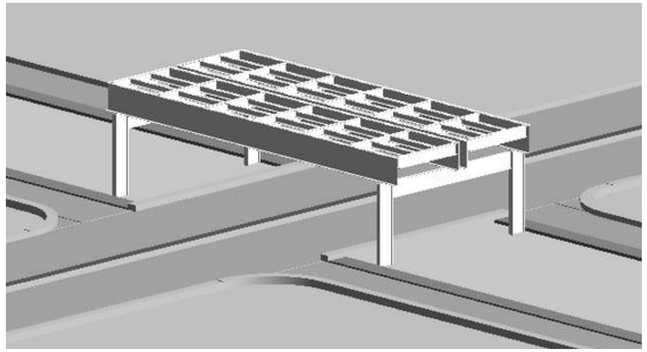

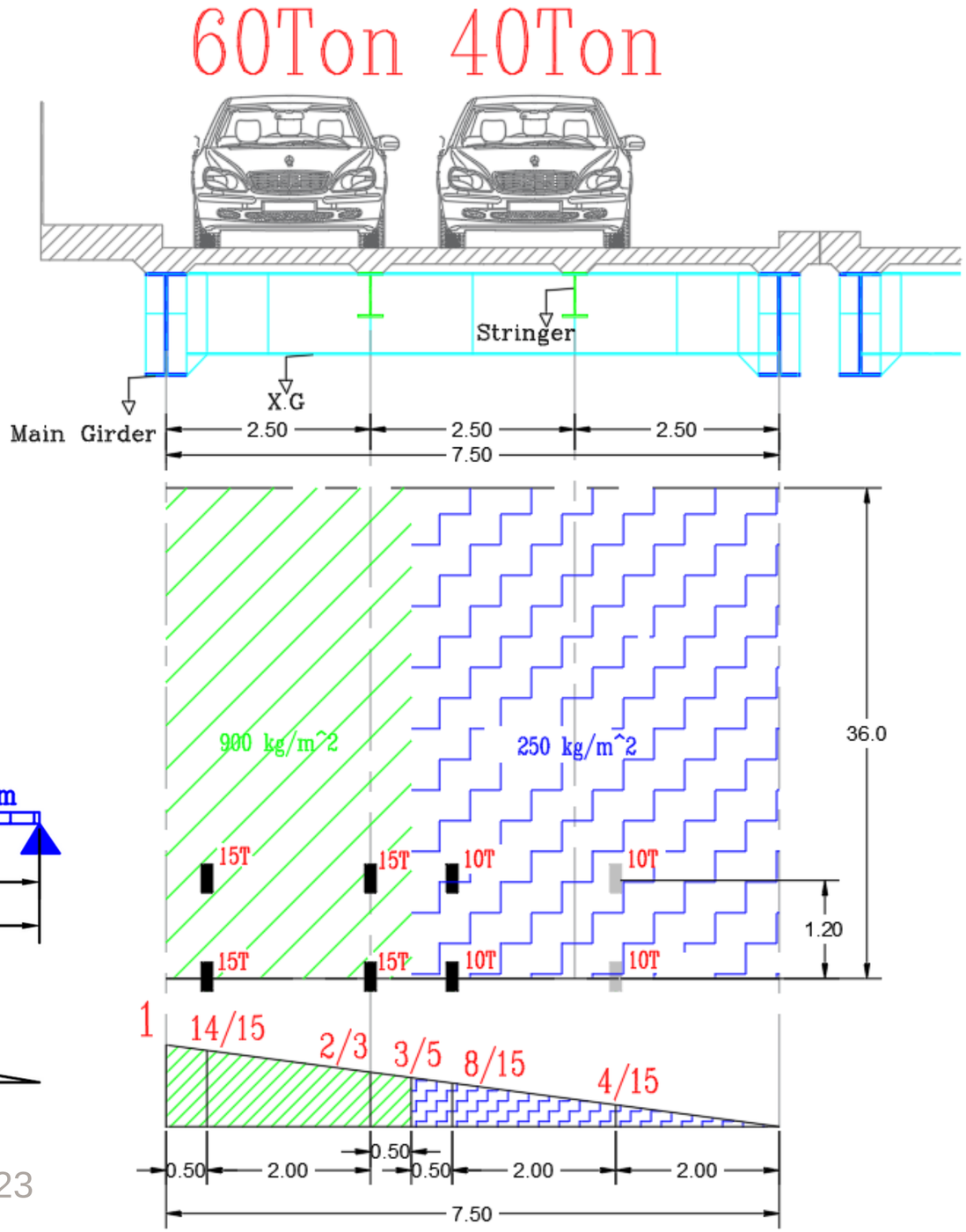

Max Moment Case (LL)

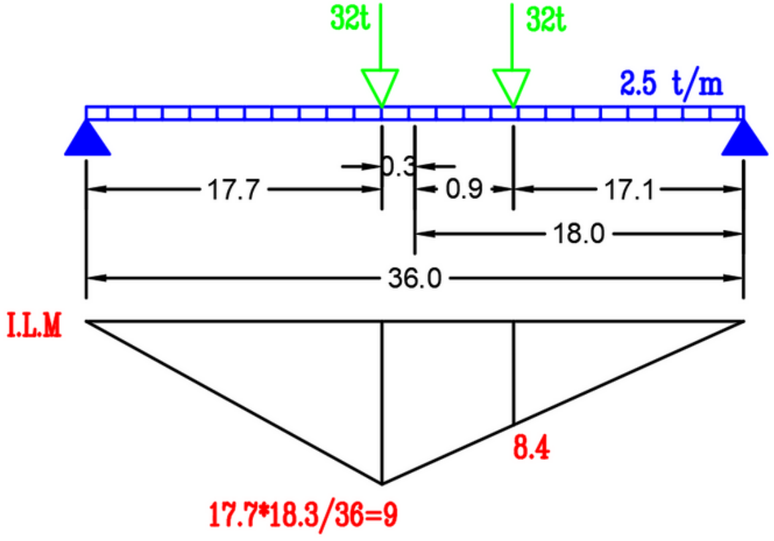

Max Shear Case (LL)

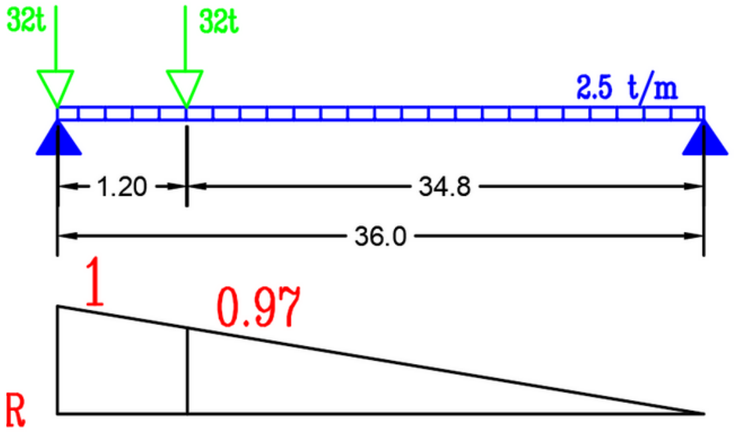

Pharos University in Alexandria
Faculty of Engineering
Department of Construcion and Mangment

Deck Bridge Part First Trial

Main Girder Design

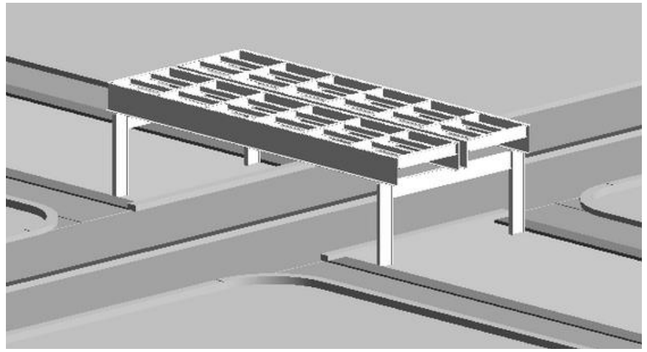

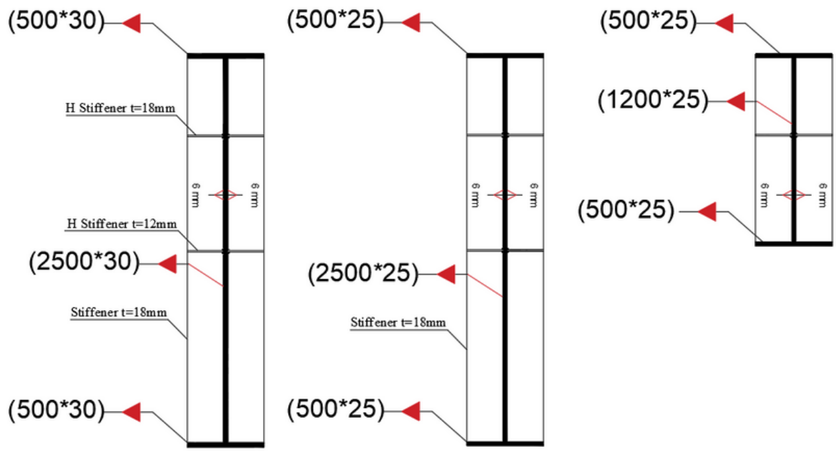

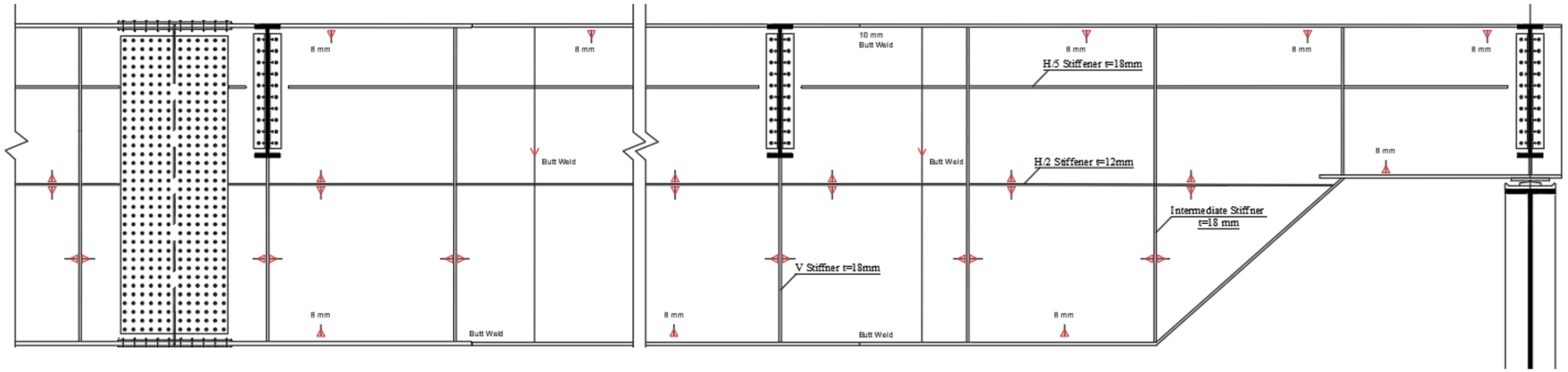

Flange curtailment

Web curtailment

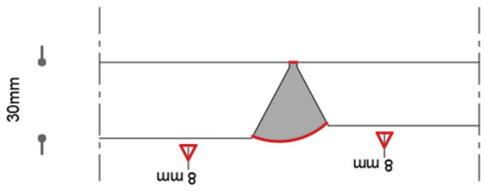

Single V Butt Weld

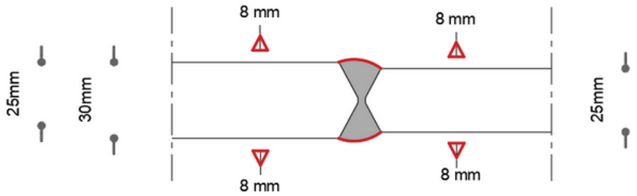

Double V Butt Weld

Main Girder Curtailment

Pharos University in Alexandria
Faculty of Engineering
Department of Construcion and Mangment

Deck Bridge Part First Trial

Shop Drawings

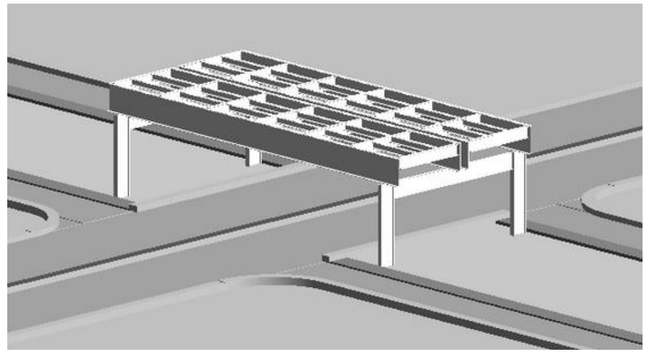

Drawing Title:
Right Part of Main Girder

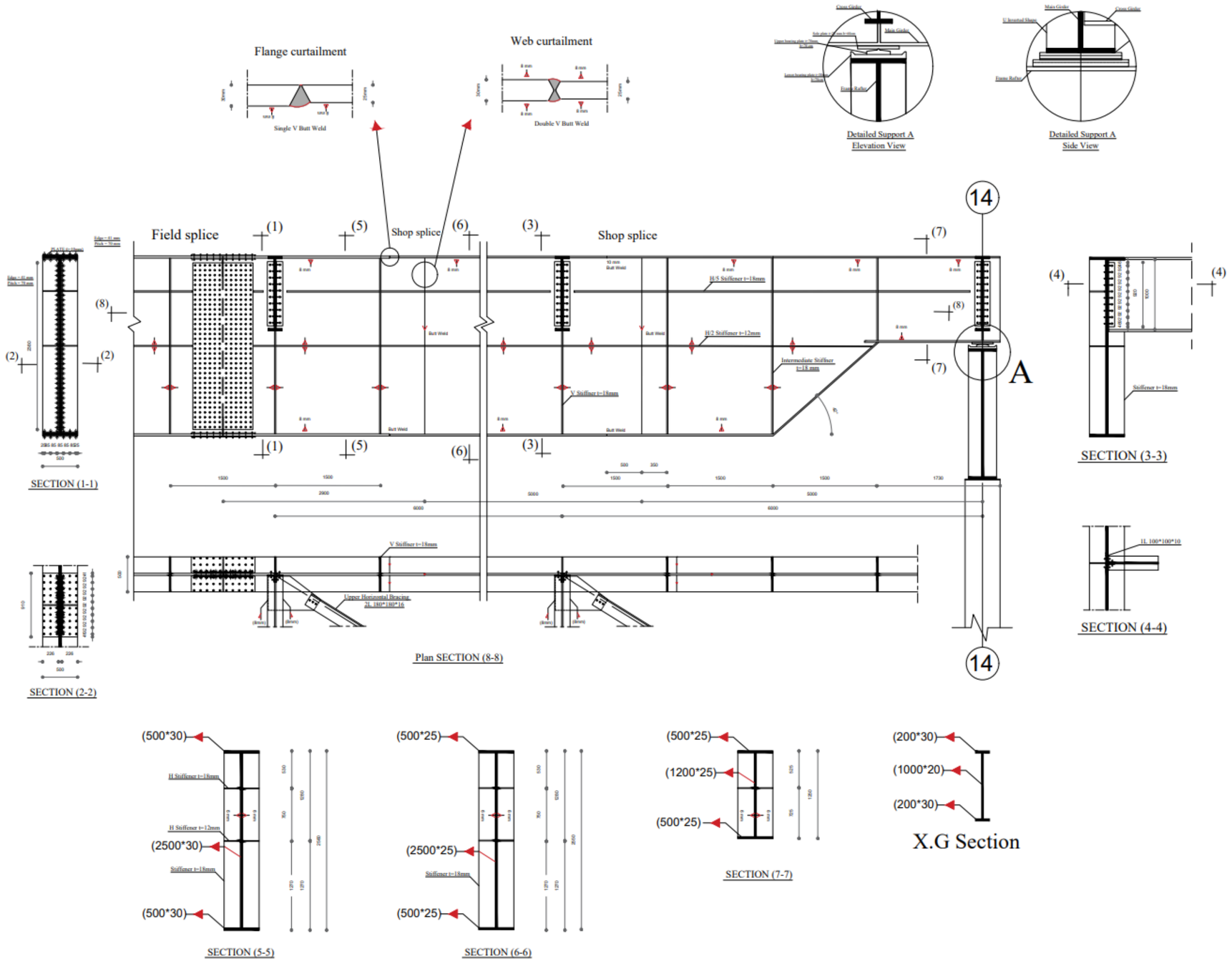

Graduation Project 2022-2023

Pharos University in Alexandria
Faculty of Engineering
Department of Construcion and Mangment

Deck Bridge Part First Trial

Shop Drawings

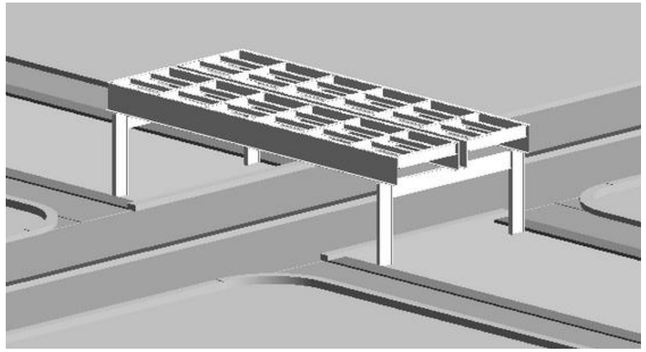

Drawing Title:
Left Column of Frame Under Multi Main Girder

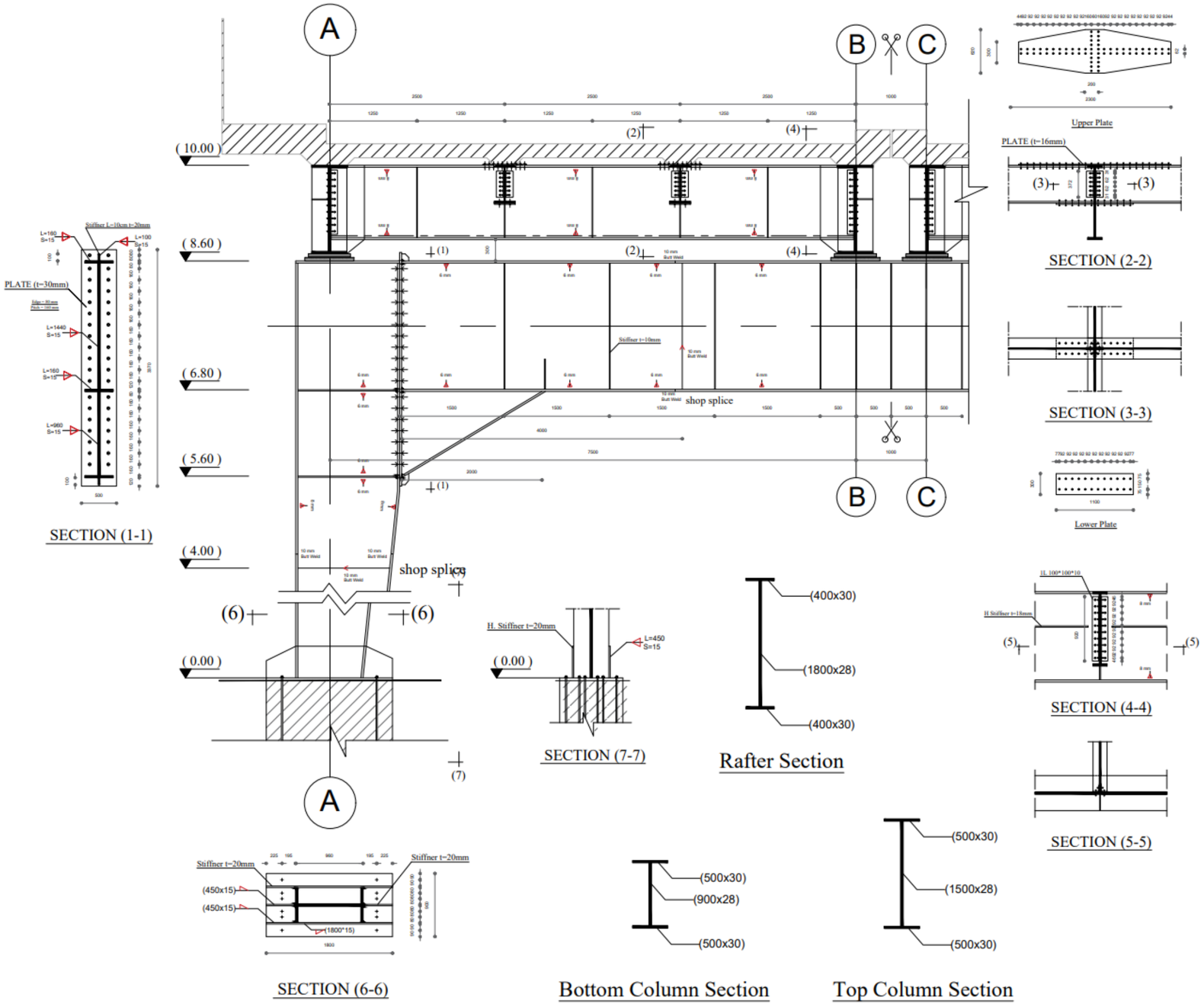

Graduation Project 2022-2023

Pharos University in Alexandria
Faculty of Engineering
Department of Construcion and Mangment

Deck Bridge Part First Trial

Shop Drawings

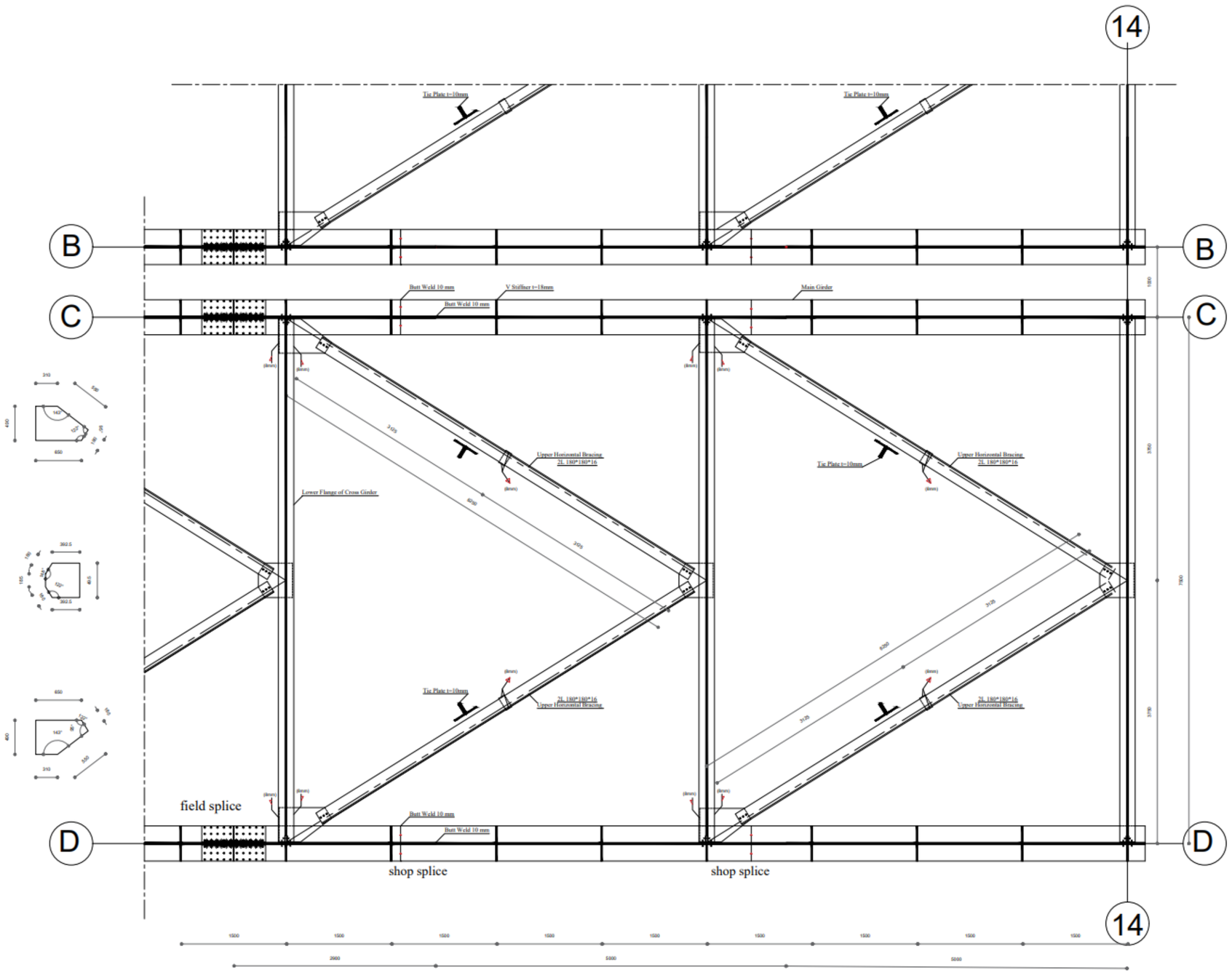

Drawing Title:
Upper Bracing System

Graduation Project 2022-2023

Pharos University in Alexandria
Faculty of Engineering
Department of Construcion and Mangment

Deck Bridge Part Second Trial

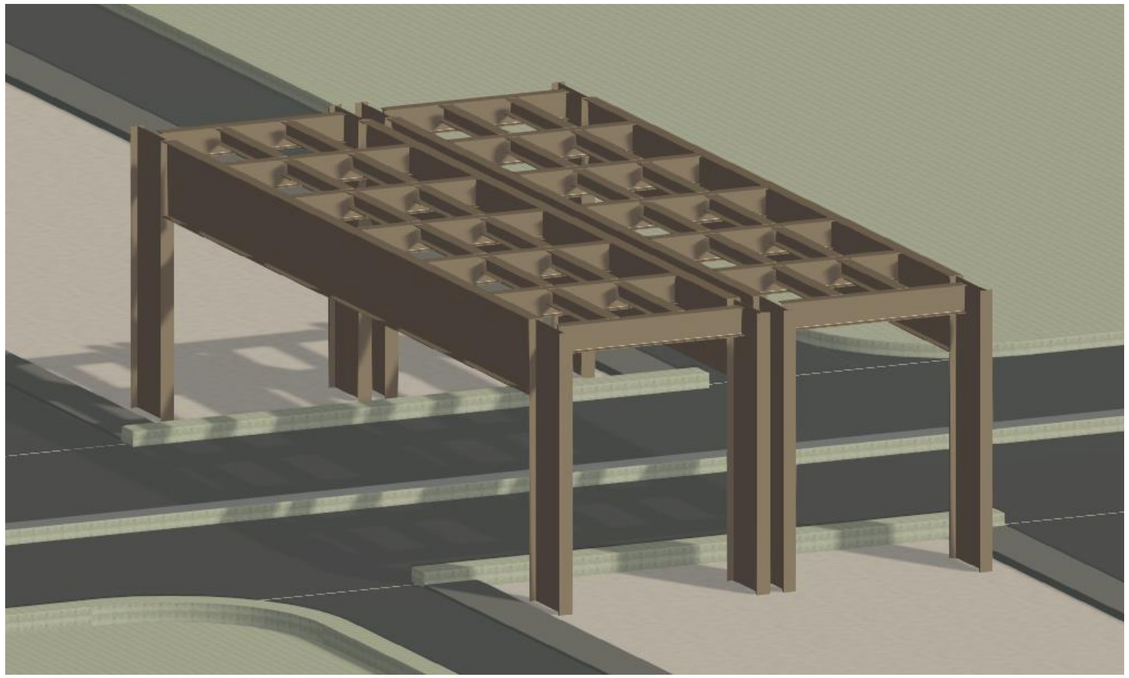

- 4 Portal Frames Span = 36 m
- Stringer Spacing = 2.5 m
- Cross Girder Spacing = 6 m

Pharos University in Alexandria
Faculty of Engineering
Department of Construcion and Mangment

Deck Bridge Part Second Trial

Frame Design

Loading

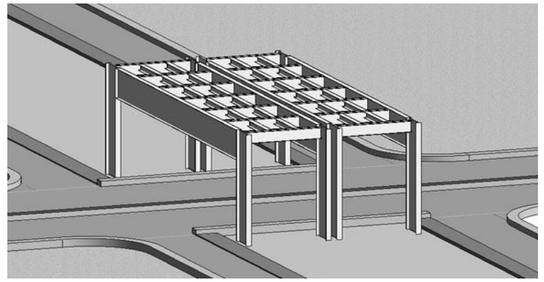

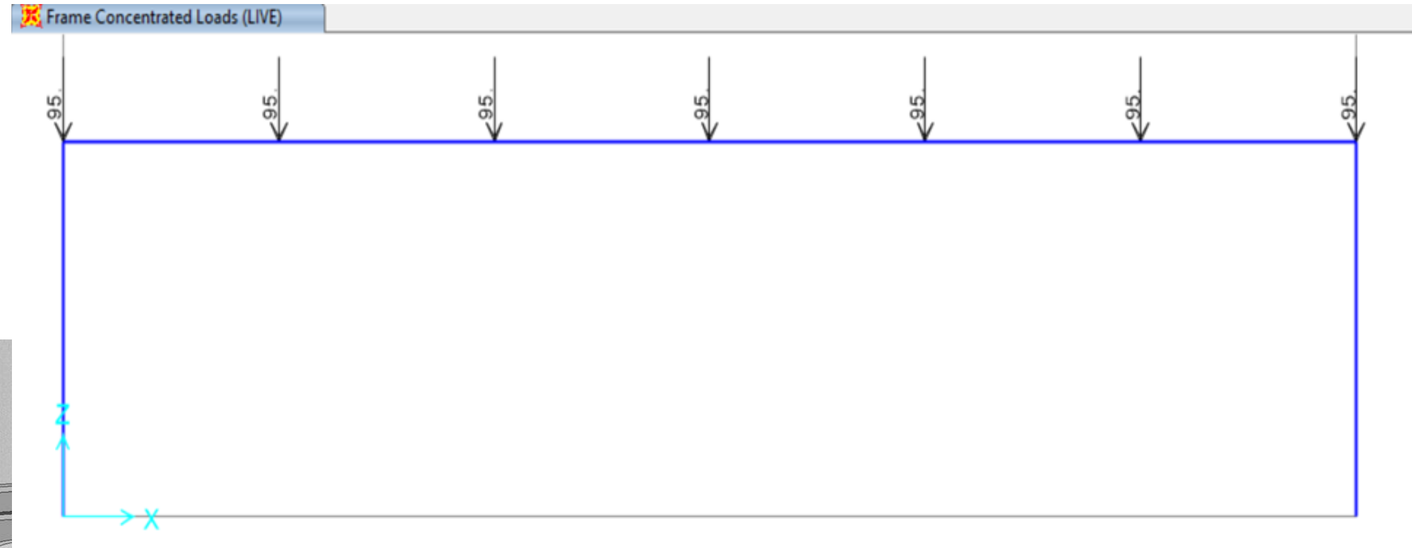

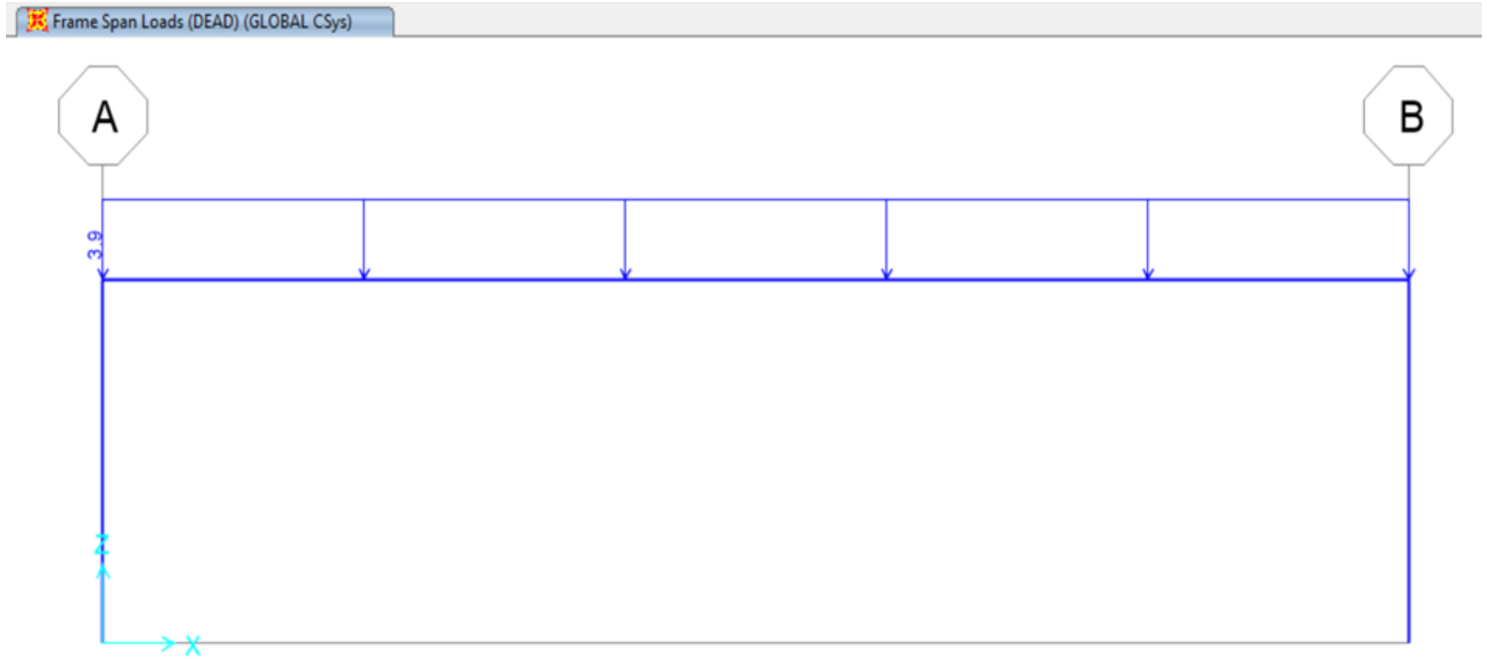

Pharos University in Alexandria
Faculty of Engineering
Department of Construcion and Mangment

Deck Bridge Part Second Trial

Frame Design

SAP Analysis

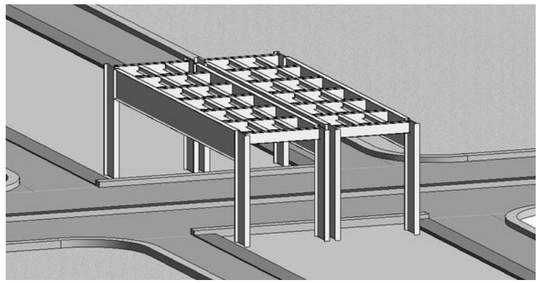

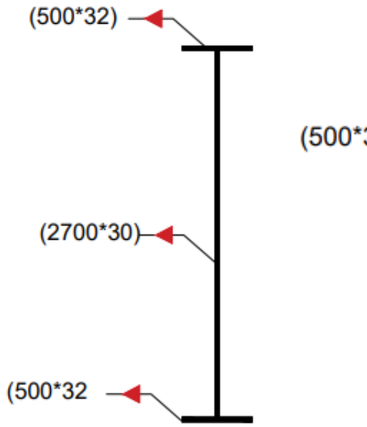

Rafter Section

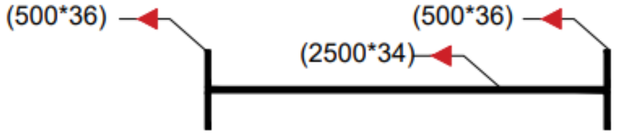

Coulmn Section

Max Moment

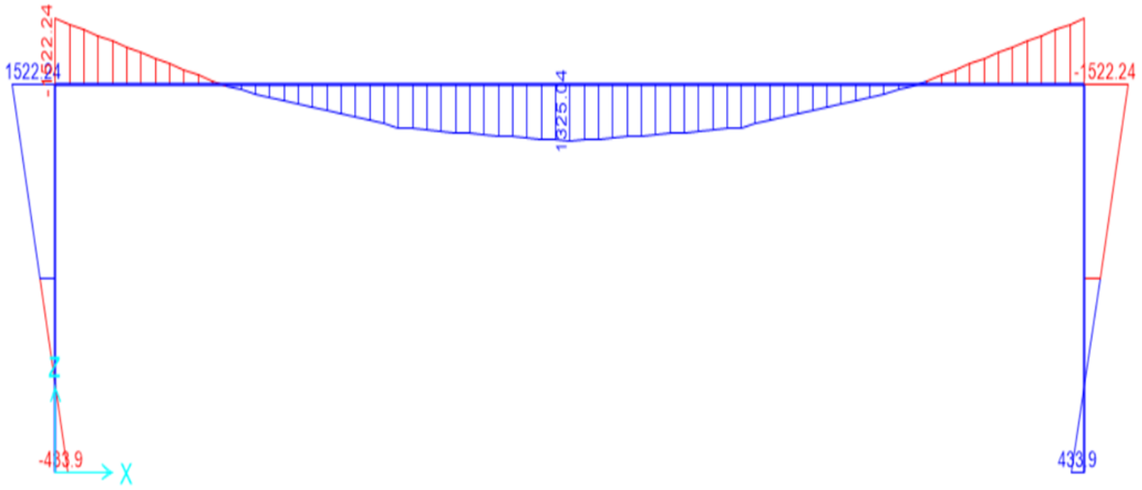

Max Shear

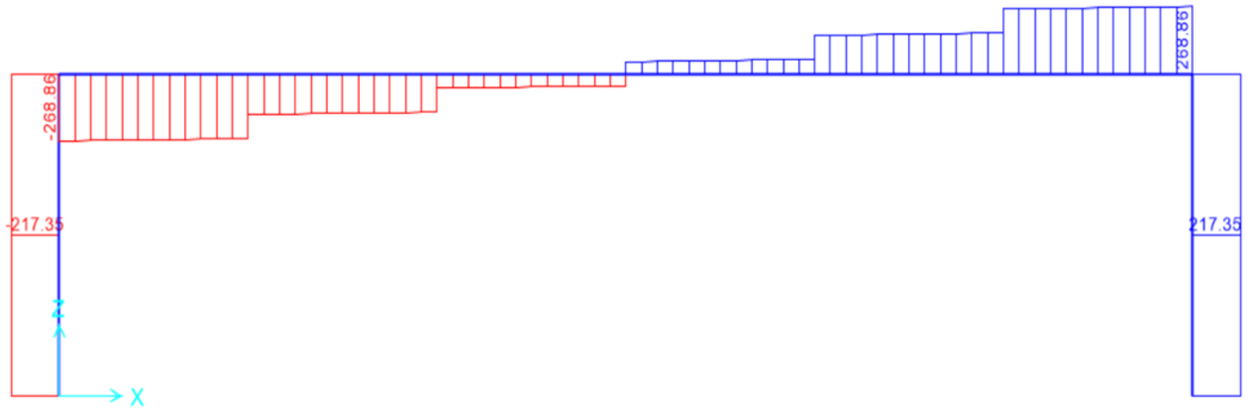

Pharos University in Alexandria
Faculty of Engineering
Department of Construcion and Mangment

Deck Bridge Part Second Trial

Shop Drawings

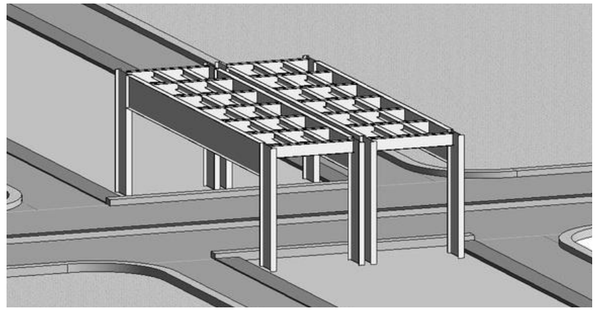

Drawing Title:
Right Part of Main Girder Frame

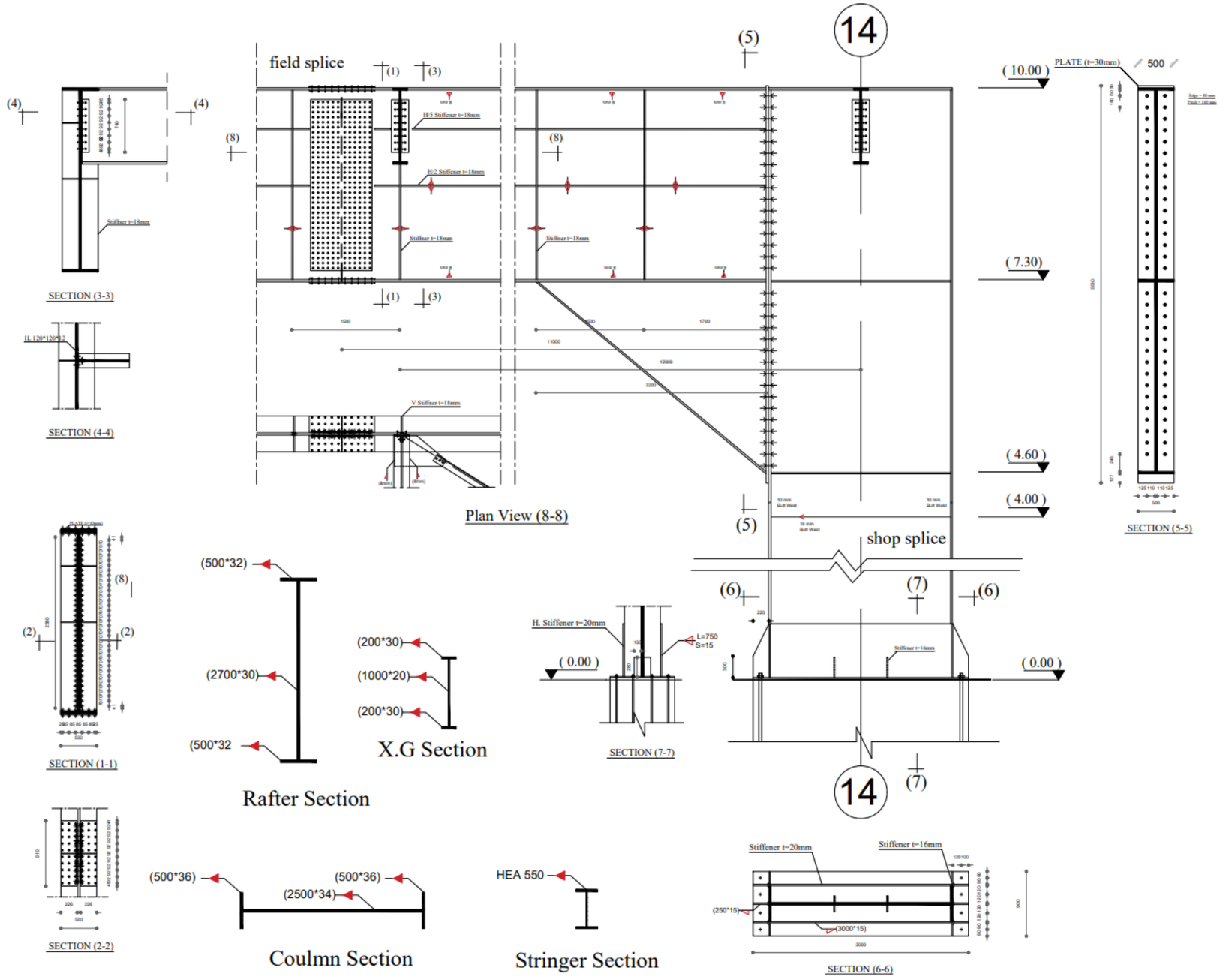

Graduation Project 2022-2023

Pharos University in Alexandria
Faculty of Engineering
Department of Construcion and Mangment

Mezzanine Floor

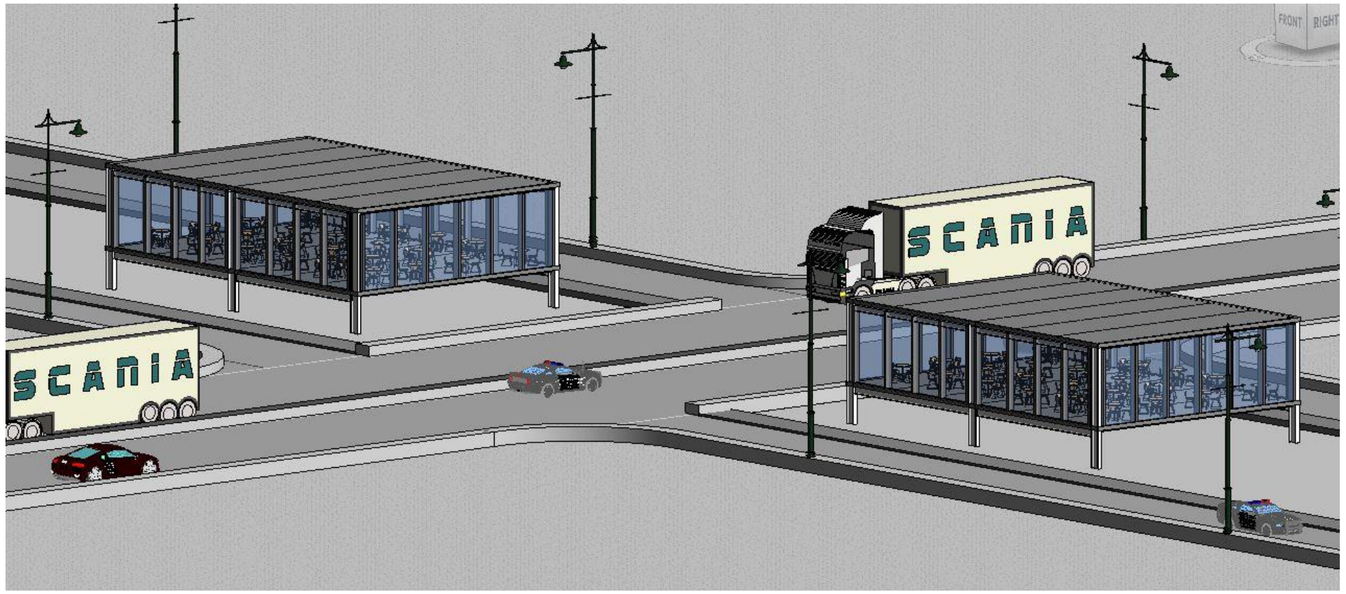

- Area=(18 x 12.4) = 223.2 m2
- Main Beam Span = 9 m
- Secondary Beam Span = 6.2 m
- First Column Height = 2m
- Coffee Shop Clear Height = 4 m

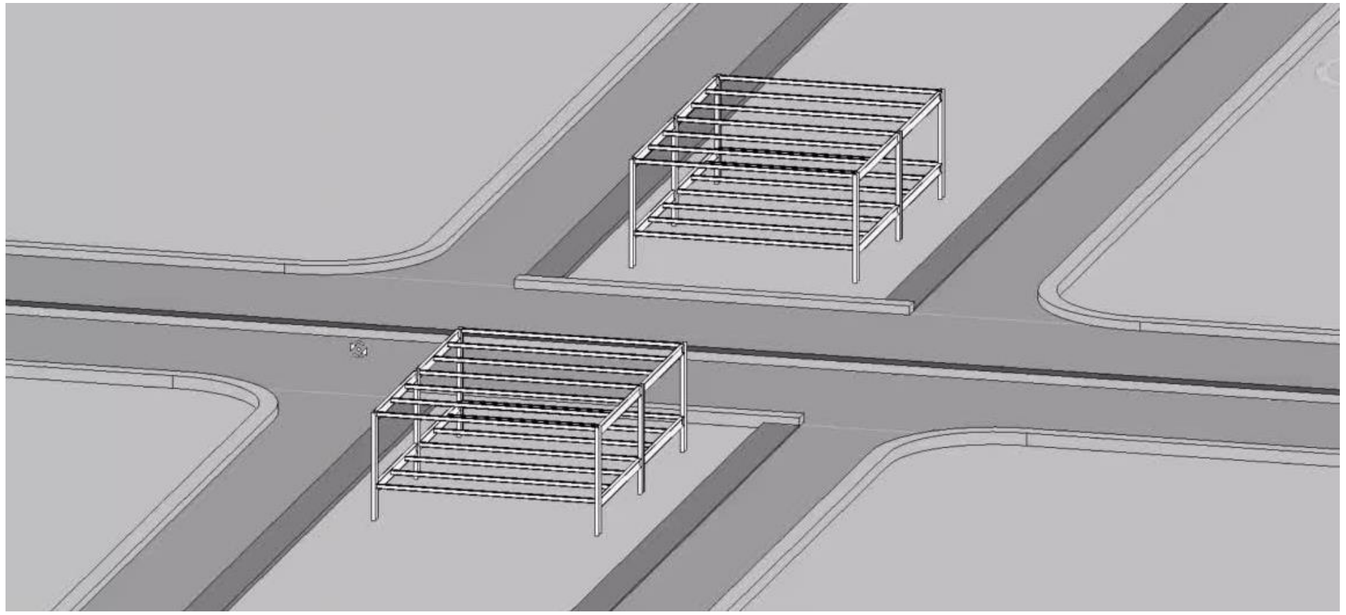

Pharos University in Alexandria
Faculty of Engineering
Department of Construcion and Mangment

Live load according to Egyptian Code

Mezzanine Floor

Secondary Beam Design

Loading

تابع جـــــــدول (٤ - ١) الأحمال الحية للمباني المختلفة*

عنصر المبنى	كجم/م٢	كن/م٢
و - القاعات والصالات ودور العبادة:		
١- ذات مقاعد ثابتة	(٤٠٠)	٤
٢- ذات مقاعد غير ثابتة وبدون مقاعد	(٥٠٠)	٥
ز - المحـــــلات والمخازن:		
- محلات البيع العاديه	(٥٠٠)	٥
- محلات البيع بالجملة والمخازن (تبعاً لنوع المواد المخزنه والآلات)	(١٠٠٠) فأكثر	١٠ فأكثر
حـ - الفنـــــادق:		
١- غرف النزلاء	(٢٥٠)	٢,٥
٢- غرف الخدمة العامة	(٤٠٠)	٤
٣- غرف الطعام والمطاعم	(٤٠٠)	٤
٤- السلالم والطرقات	(٤٠٠)	٤

Pharos University in Alexandria
Faculty of Engineering
Department of Construcion and Mangment

Mezzanine Floor

Main Beam & Column Design

Loading

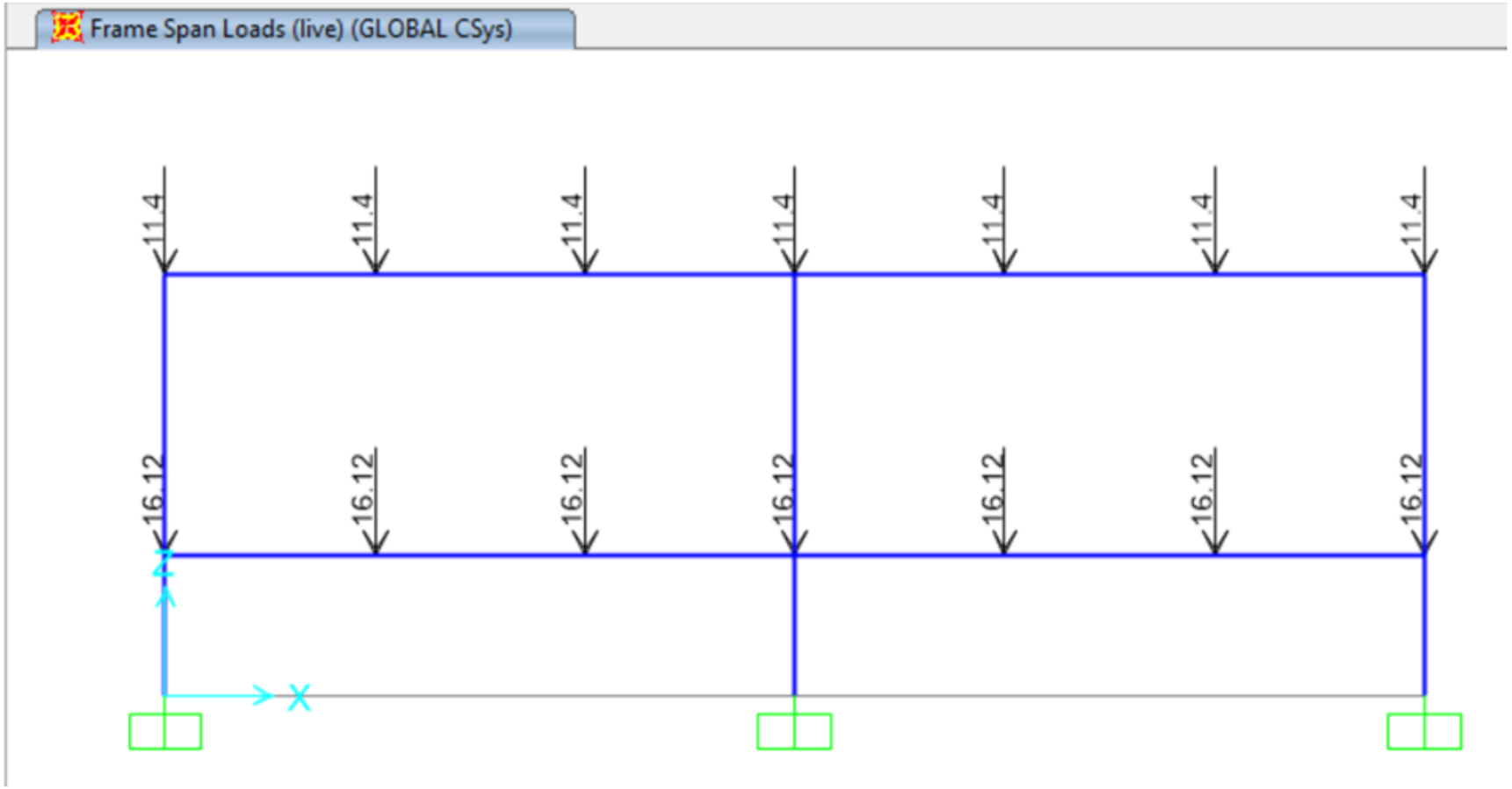

Pharos University in Alexandria
Faculty of Engineering
Department of Construcion and Mangment

Mezzanine Floor

Main Beam & Column Design

SAP Analysis

Max Moment

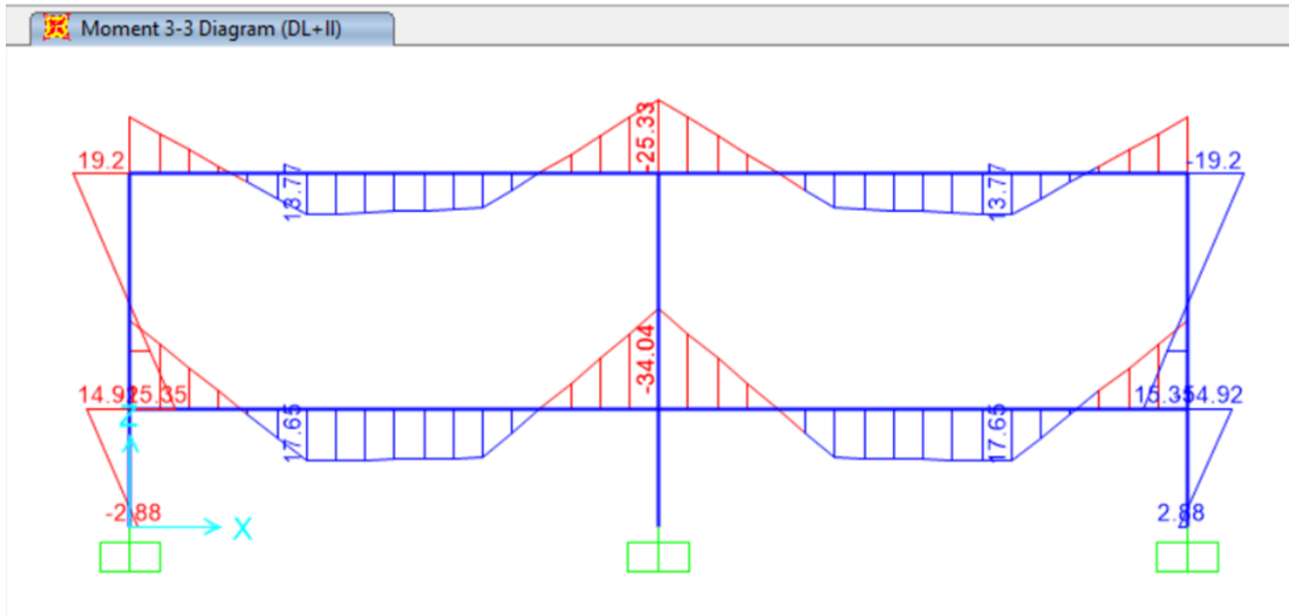

Max Shear

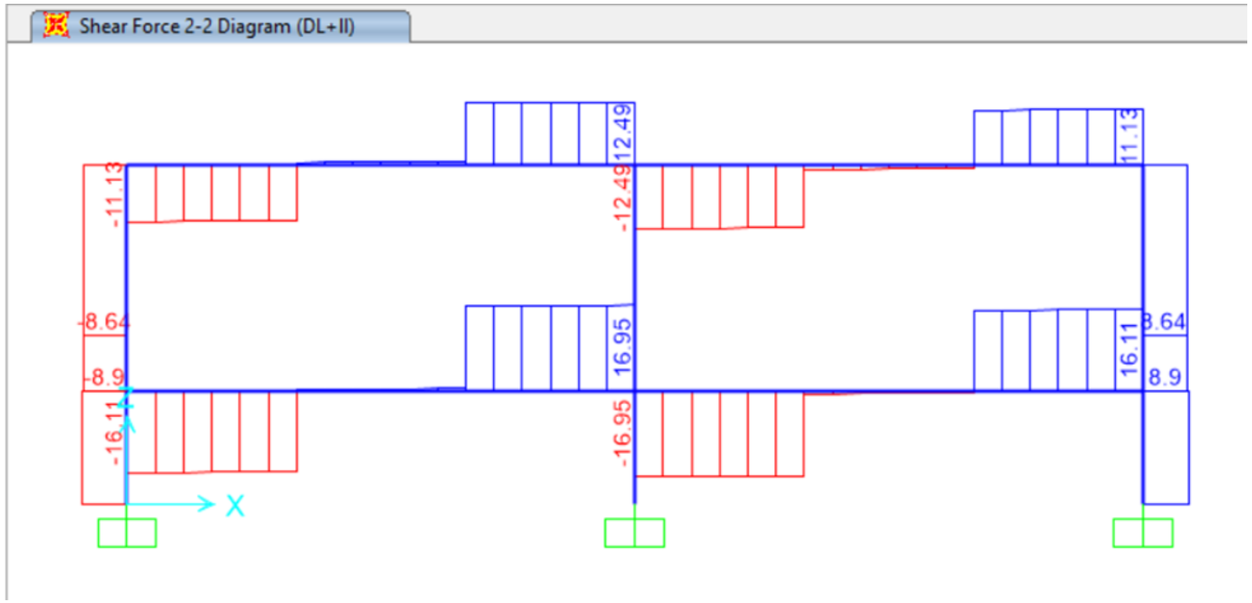

Pharos University in Alexandria
Faculty of Engineering
Department of Construcion and Mangment

Mezzanine Floor

Main Beam & Column Design

Sections Selection

	Second Floor	First Floor
Secondary Beam Sections	IPE 300	IPE 360
Main Beam Sections	IPE 450	IPE 500
Column Sections	IPE 500	IPE 600

Pharos University in Alexandria
Faculty of Engineering
Department of Construcion and Mangment

Mezzanine Floor

Shop Drawings

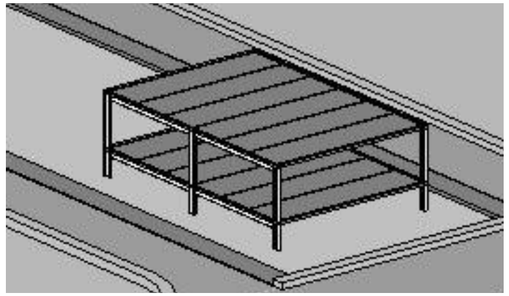

Drawing Title:
Middle column of mezzanine floor

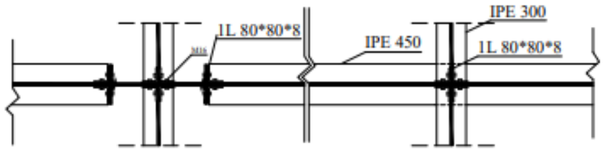

Section (4–4)

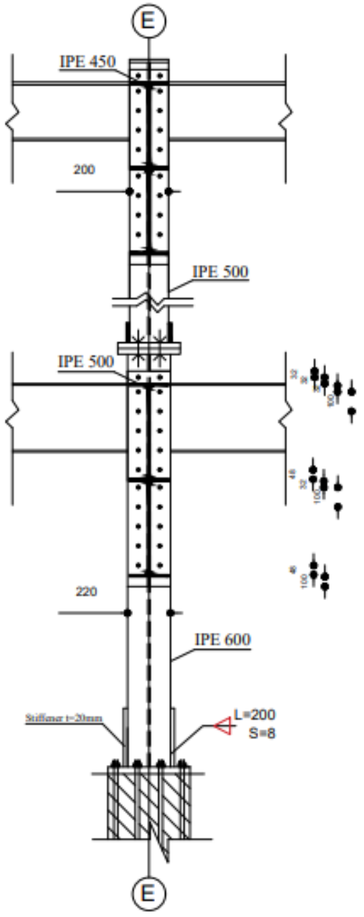

Section (5–5)
Column Side View

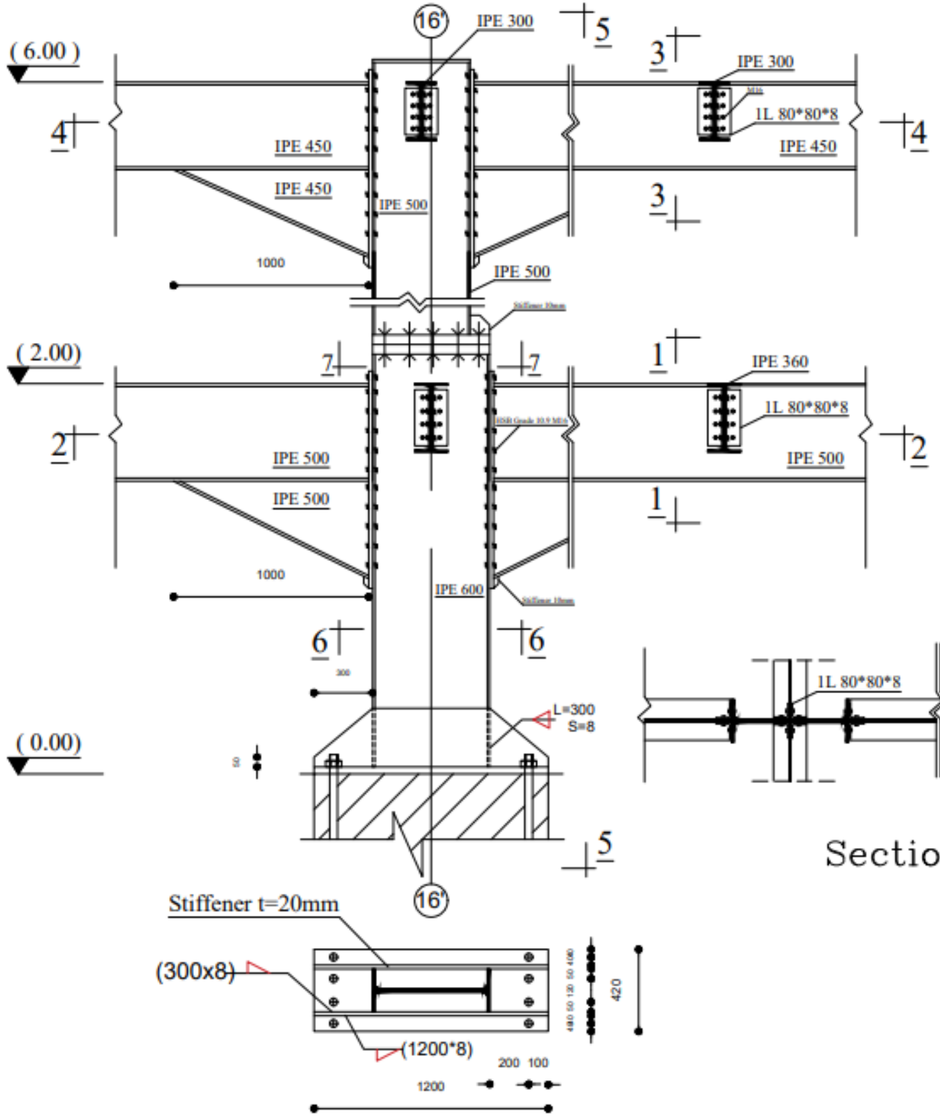

Section (6–6)

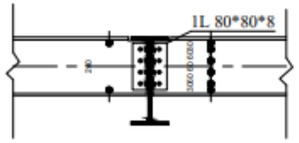

Section (3–3)

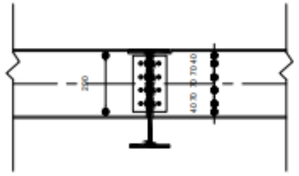

Section (1–1)

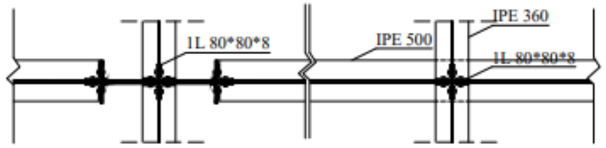

Section (2–2)

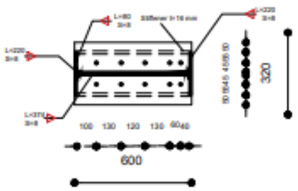

Section (7–7)

Pharos University in Alexandria
Faculty of Engineering
Department of Construcion and Mangment

Management

Graduation Project 2022-2023

Weight Comparison (Optimum Option)

Total Steel Weight of First Trial = 158.2 ton

Total Steel Weight of Second Trial = 205.9 ton

Pharos University in Alexandria
Faculty of Engineering
Department of Construcion and Mangment

Time Estimation

Steel Bridge		158	01-Aug-23	07-Mar-24
Preliminary Work		75	01-Aug-2	13-Nov-23
B.100	Surveying Works	7	01-Aug-2	09-Aug-23
B.110	Site Offices	3	10-Aug-2	14-Aug-23
B.630	Production of Members	75	01-Aug-2	13-Nov-23
Inclined Part (1)		100	01-Aug-2	18-Dec-23
Earth Works		32	01-Aug-2	13-Sep-23
B.120	Excavation	7	15-Aug-2	23-Aug-23
B.130	Replacement	3	01-Aug-2	03-Aug-23
B.140	Insulation	5	25-Aug-2	31-Aug-23
B.150	Backfilling	3	01-Sep-2	05-Sep-23
B.160	Backfilling For Ramp	7	05-Sep-2	13-Sep-23
Concrete Works		97	04-Aug-2	18-Dec-23
B.170	P.C Footings	5	04-Aug-2	10-Aug-23
B.180	R.C Footings	10	11-Aug-2	24-Aug-23
B.190	Retaining Wall	7	25-Aug-2	04-Sep-23
B.200	Inclined Slap	7	08-Dec-2	18-Dec-23
Steel Installing Works		18	14-Nov-2	07-Dec-23
B.210	Installing Columns	5	14-Nov-2	20-Nov-23
B.220	Installing Rafter	5	21-Nov-2	27-Nov-23
B.230	Installing stringer	8	28-Nov-2	07-Dec-23

Time Estimation

Deck Part		141	24-Aug-2	07-Mar-24
Earth Works		109	24-Aug-2	23-Jan-24
B.240	Excavation	7	24-Aug-2	01-Sep-23
B.250	Replacement	3	19-Dec-2	21-Dec-23
B.260	Insulation	5	12-Jan-2	18-Jan-24
B.270	Backfilling	3	19-Jan-2	23-Jan-24
Concrete Works		55	22-Dec-2	07-Mar-24
B.280	P.C Footings	5	22-Dec-2	28-Dec-23
B.290	R.C Footings	10	29-Dec-2	11-Jan-24
B.300	Deck Slap	7	28-Feb-2	07-Mar-24
Steel Installing Works		25	24-Jan-2	27-Feb-24
B.310	Installing Columns	2	24-Jan-2	25-Jan-24
B.320	Installing Rafter	2	26-Jan-2	29-Jan-24
B.330	Installing Main girder	6	30-Jan-2	06-Feb-24
B.340	Installing cross girder	6	07-Feb-2	14-Feb-24
B.350	Bracing	3	15-Feb-2	19-Feb-24
B.360	Installing stringer	6	20-Feb-2	27-Feb-24

Pharos University in Alexandria
Faculty of Engineering
Department of Construcion and Mangment

Time Estimation

Inclined Part (2)		76	04-Sep-2	18-Dec-23	12
Earth Works		36	04-Sep-2	23-Oct-23	45
B.370	Excavation	7	04-Sep-2	12-Sep-23	30
B.380	Replacement	3	13-Sep-2	15-Sep-23	30
B.390	Insulation	5	09-Oct-23	13-Oct-23	30
B.400	Backfilling	3	16-Oct-23	18-Oct-23	30
B.610	Backfilling for ramp	5	17-Oct-23	23-Oct-23	45
Concrete Works		66	18-Sep-2	18-Dec-23	12
B.410	P.C Footings	5	18-Sep-2	22-Sep-23	30
B.420	R.C Footings	10	25-Sep-2	06-Oct-23	30
B.430	Retaining Wal	6	09-Oct-23	16-Oct-23	45
B.440	Inclined Slap	7	08-Dec-2	18-Dec-23	12
Steel Installing Works		18	14-Nov-2	07-Dec-23	12
B.450	Installing Columns	5	14-Nov-2	20-Nov-23	12
B.460	Installing Rafter	5	21-Nov-2	27-Nov-23	12
B.470	Installing stringer	8	28-Nov-2	07-Dec-23	12
Mezzanine Floor		110	13-Sep-2	13-Feb-24	17
Earth Works		92	13-Sep-2	18-Jan-24	35
B.480	Excavation	3	13-Sep-2	15-Sep-23	124
B.490	Replacement	2	19-Dec-2	20-Dec-23	12
B.500	Insulation	3	11-Jan-2	15-Jan-24	12
B.510	Backfilling	3	16-Jan-2	18-Jan-24	12
Concrete Works		39	21-Dec-2	13-Feb-24	12
B.520	P.C Footings	5	21-Dec-2	27-Dec-23	12
B.530	R.C Footings	10	28-Dec-2	10-Jan-24	12
B.540	Slap	5	07-Feb-2	13-Feb-24	12
Steel Installing Works		13	19-Jan-2	06-Feb-24	12
B.550	Installing Columns	4	19-Jan-2	24-Jan-24	12
B.560	Installing Main Beam	3	25-Jan-2	29-Jan-24	12
B.570	Installing Secondry Beam	6	30-Jan-2	06-Feb-24	12
Finishing Works		46	19-Dec-2	20-Feb-24	12
B.580	Asphalt Works	20	28-Dec-2	24-Jan-24	22
B.590	Installing Rail	7	19-Dec-2	27-Dec-23	22
B.600	Installing Lamposts	9	25-Jan-2	06-Feb-24	22
B.620	Glass and Painting	5	14-Feb-2	20-Feb-24	12

Pharos University in Alexandria
Faculty of Engineering
Department of Construcion and Mangment

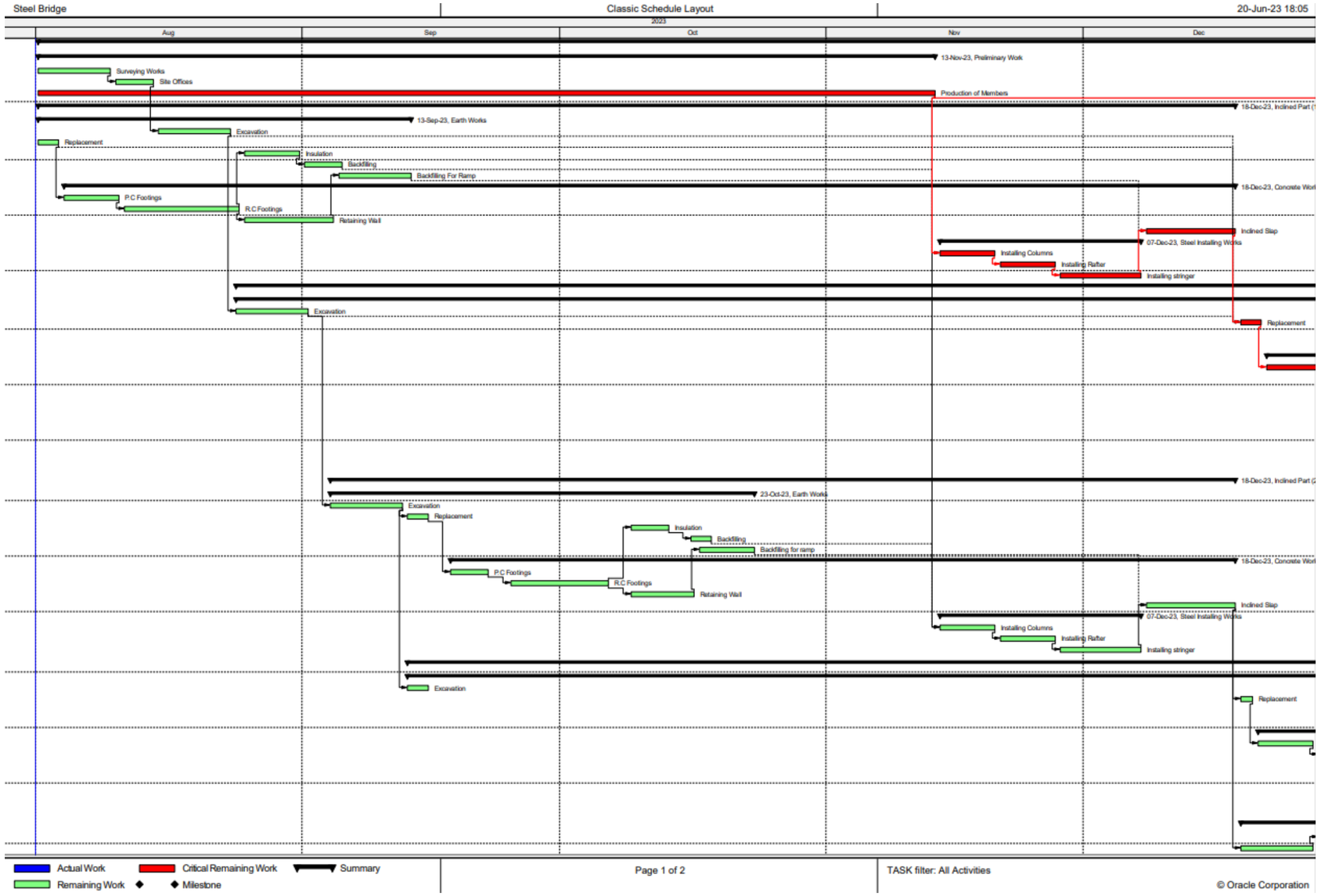

Project Estimated Duration = 158 Days

Flow chart (Premavira)

Weight Calculations

	Type of member	No.of Member	B flange (mm)	T flange(mm)	h web(mm)	T web(mm)	Area (mm^2)	Length(m)	Volume (m^3)	Weight (ton)
Deck Part	Cross girder of deck part	14	200	30	1000	20	32000	6	2.688	21.1008
	Main girder of deck part b4 Car	4	500	30	2500	30	105000	15.2	6.384	50.1144
	Main girder of deck part car part	4	500	25	2500	25	87500	14.8	5.18	40.663
	Main girder after depth decrease	4	500	25	1200	25	55000	3.46	0.7612	5.97542
	Main girder Inclined Part	4					71250	3	0.855	6.71175
	Rafter of frame of deck part	2	400	30	1800	28	74400	14	2.0832	16.35312
	Column Straight part	4	500	30	1500	28	72000	3.28	0.94464	7.415424
	Column cart part (deck part)	4					63600	5.3	1.34832	10.584312
	Hunch	2	400	30	1800	28	74400	2	0.2976	2.33616
Inclined part	(Rafter) frame of Inclined Part	24	380	18	1500	15	36180	14.5	12.59064	98.836524
	(column) frame of Inclined Part	4	400	24	1500	22	52200	10	2.088	16.3908
	(column) frame of Inclined Part	4	400	24	1500	22	52200	9.4	1.96272	15.407352
	(column) frame of Inclined Part	4	400	24	1500	22	52200	8.8	1.83744	14.423904
	(column) frame of Inclined Part	4	400	24	1500	22	52200	8.2	1.71216	13.440456
	(column) frame of Inclined Part	4	400	24	1500	22	52200	7.6	1.58688	12.457008
	(column) frame of Inclined Part	4	400	24	1500	22	52200	7	1.4616	11.47356
	(column) frame of Inclined Part	4	400	24	1500	22	52200	6.4	1.33632	10.490112
	(column) frame of Inclined Part	4	400	24	1500	22	52200	5.8	1.21104	9.506664
	(column) frame of Inclined Part	4	400	24	1500	22	52200	5.2	1.08576	8.523216
	(column) frame of Inclined Part	4	400	24	1500	22	52200	4.6	0.96048	7.539768
	(column) frame of Inclined Part	4	400	24	1500	22	52200	4	0.8352	6.55632
	(column) frame of Inclined Part	4	400	24	1500	22	52200	3.4	0.70992	5.572872
	Hunch	24	380	18	1500	15	36180	2	1.73664	13.632624
									Total weight	391.872942

Weight Calculations

Type of plate	No.of plate	T (mm)	B (mm)	Area(mm^2)	H (m)	Volume (m^3)	Weight (ton)
Fixed pase of Inclined Part	48	50	930	46500	2.35	5.2452	41.17482
corner plate inclined part	48	24	400	9600	3.1	1.42848	11.213568
Fixed pase of deck Part	4	30	900	27000	1.8	0.1944	1.52604
corner plate dec part	4	30	500	15000	3.37	0.2022	1.58727
splice plate	16	20	860	17200	2.38	0.654976	5.1415616
					Total weight		55.501698

Weight Calculations

quantity of stringer					
Type of member	Type Section	No.of Member	Weight (kg/m)	Length (m)	Total weight (ton)
Stringr of inclined part	IPE600	198	122	6	144.936
Stringr of deck part	HEA550	24	168	6	24.192
			Total weight		169.128

Mezzanine Floor					
Type of member	Type Section	No.of Members	weight (kg/m)	Length (m)	Total weight (ton)
Column first floor	IPE600	9	122	2	2.196
Column socend floor	IPE500	9	90.7	4	3.2652
Main Beam First floor	IPE500	6	90.7	9	4.8978
Main Beam Socend floor	IPE450	6	77.6	9	4.1904
Secondary beam First floor	IPE360	14	57.1	6.2	4.95628
Secondary beam socend floor	IPE300	14	42.2	6.2	3.66296
			Total weight		23.16864

Upper Bracing System	2L 100*100*10	24	30.2	6.32	4.580736
Site gerts	IPE600	20	122	6	14.64
			Total weight		19.220736

Total weight of project	658.892016

Pharos University in Alexandria
Faculty of Engineering
Department of Construcion and Mangment

Field Pictures

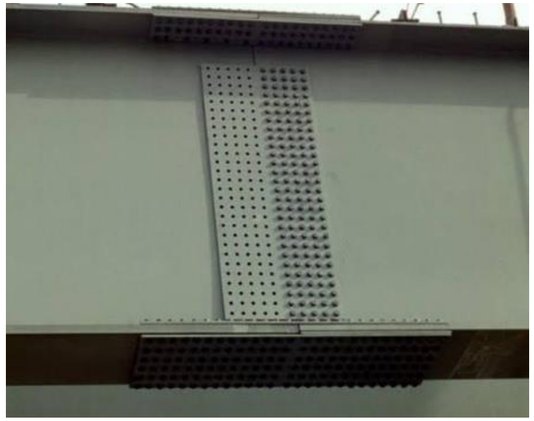

Field Splice

Corner Connection

Main Girder Curtailment

Mahmodia – Alexandria, Egypt

Beam with Beam Connection

Fixed Base

Environmental Impact

environment

- Recycled Steel
- Faster Construction

Economic

- Structural Efficiency
- Faster Erection
- Lighter Foundations

Social

- Long-term Durability

Used Programs

SAP2000

Conclusion

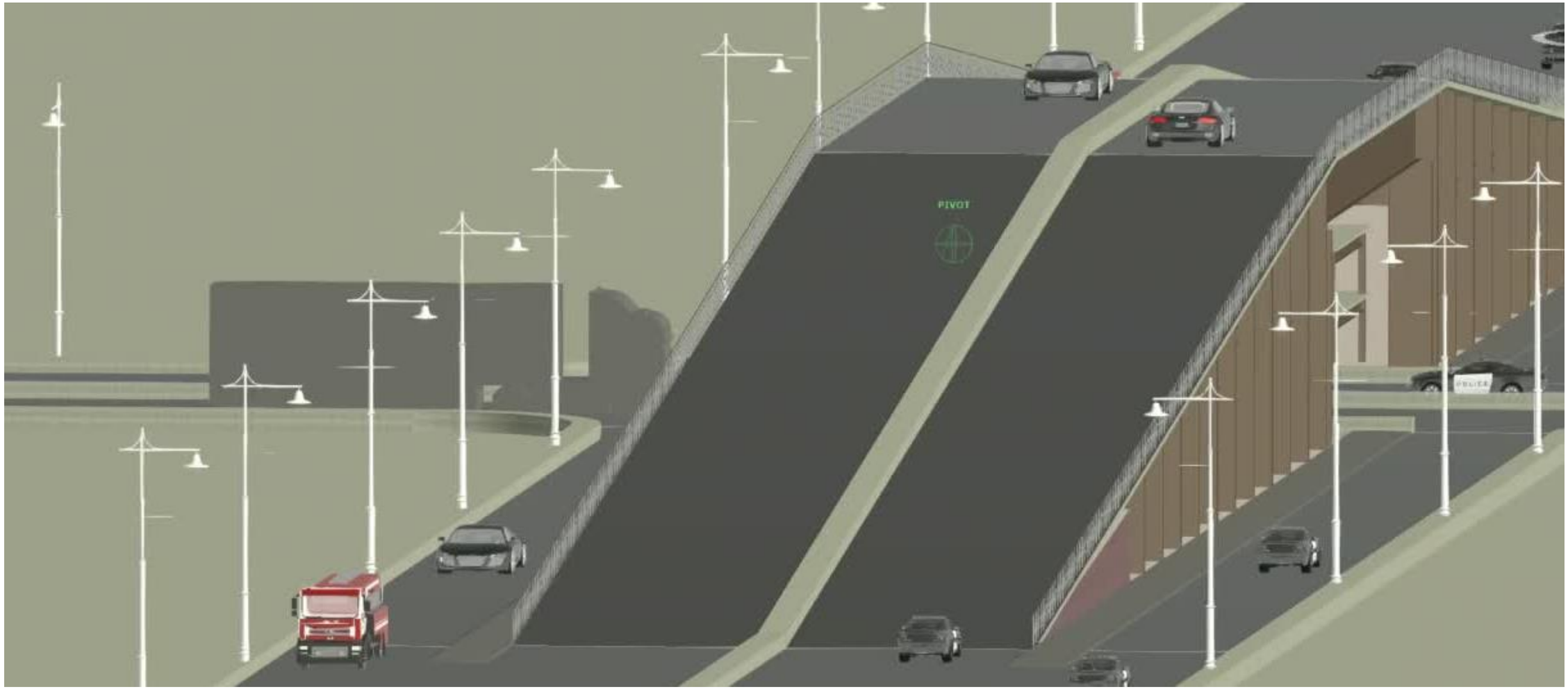

References

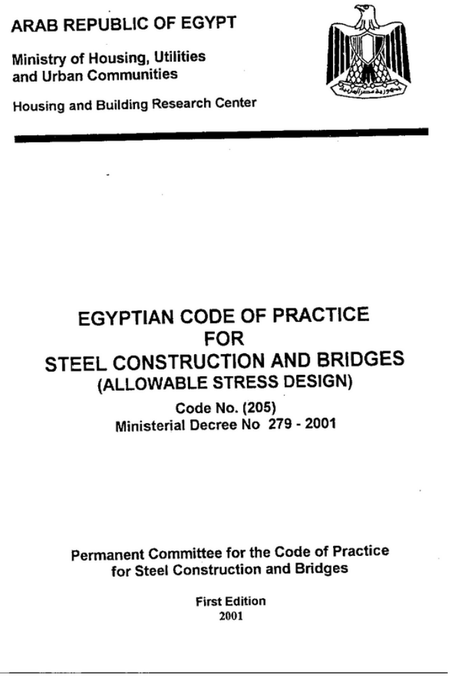
ARAB REPUBLIC OF EGYPT
Ministry of Housing, Utilities and Urban Communities
Housing and Building Research Center

EGYPTIAN CODE OF PRACTICE
FOR
STEEL CONSTRUCTION AND BRIDGES
(ALLOWABLE STRESS DESIGN)
Code No. (205)
Ministerial Decree No 279 - 2001

Permanent Committee for the Code of Practice for Steel Construction and Bridges
First Edition
2001

ministerial decree (2001). Egyptian Code of practice for steel construction and bridges(Code no. 205)

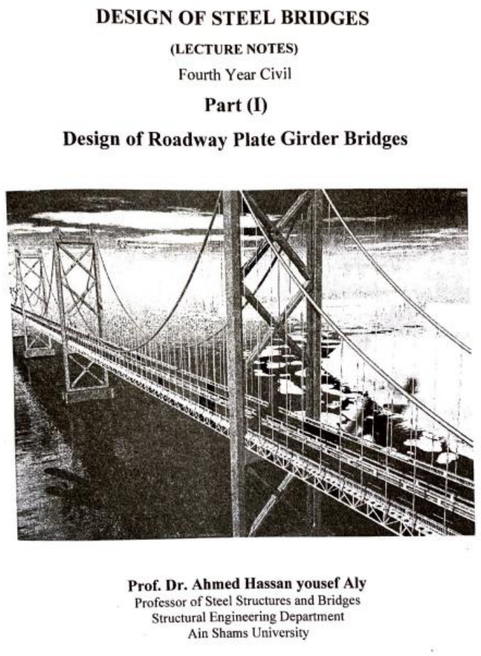
DESIGN OF STEEL BRIDGES
(LECTURE NOTES)
Fourth Year Civil
Part (I)
Design of Roadway Plate Girder Bridges

Prof. Dr. Ahmed Hassan yousef Aly
Professor of Steel Structures and Bridges
Structural Engineering Department
Ain Shams University

Ahmed Hassan A.H. (2021). Design of Steel Bridge (Lecture Notes)(Part 1),Ain Shams University

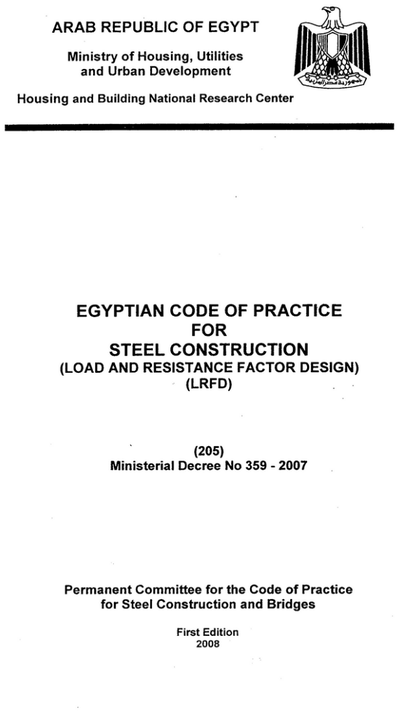
ARAB REPUBLIC OF EGYPT
Ministry of Housing, Utilities and Urban Development
Housing and Building National Research Center

EGYPTIAN CODE OF PRACTICE
FOR
STEEL CONSTRUCTION
(LOAD AND RESISTANCE FACTOR DESIGN)
(LRFD)

(205)
Ministerial Decree No 359 - 2007

Permanent Committee for the Code of Practice for Steel Construction and Bridges
First Edition
2008

ministerial decree (2007). Egyptian Code of practice for steel construction Load and Resistance Factor Design (Code no. 205)

Pharos University in Alexandria
Department of Construction Engineering and Management

Steel Structure

Car Agency and Maintenance Center

Graduation Project 2022-2023

Pharos University in Alexandria
Faculty of Engineering
Department of Construcion and Mangment

Supervised By

Prof. Dr. Mohamed El-Ghandour

Eng. Ahmed Abd El-Nasser

Ahmed Alaa
201801199

Omar Abosharaa
201801371

Omar Fayez
201801493

Pharos University in Alexandria
Faculty of Engineering
Department of Construcion and Mangment

Contents

- *Goals and objectives.*
- *Introduction.*
- *Architectural views.*
- *Structural Views.*
- *Shop drawing.*
- *Some of the problems we encountered.*
- *Conclusion.*
- *References.*

Graduation Project 2022-2023

Goals and objectives

Structural steel is a category of steel used for making construction materials in a variety of shapes. Many structural steel shapes take the form of an elongated beam having a profile of a specific cross section.

Project objectives:

- *Improving cost efficiency*
- *Integrate academic information into practical life*
- *Studying different types of dealing with problems related to the design phase.*

Pharos University in Alexandria
Faculty of Engineering
Department of Construcion and Mangment

Introduction

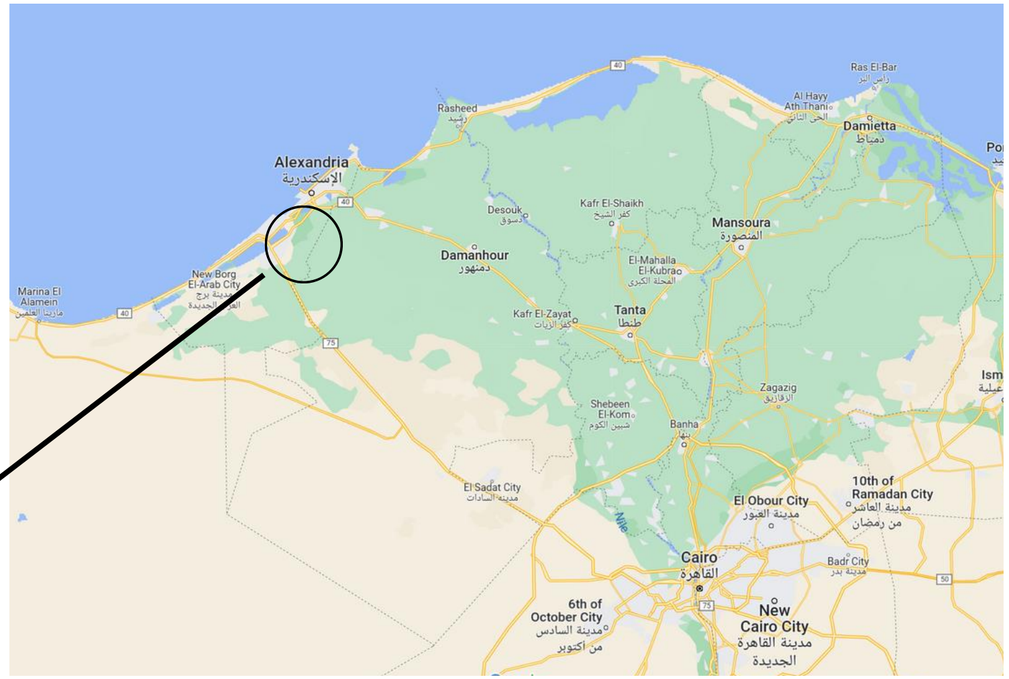

Google Maps

Google Earth

Recently, car agencies have been thinking of all possible ways to provide comfort to customers while shopping for cars or repairing car breakdowns. In This issue being studied, it was required to design 2 units.

- A car repair workshop on an area of 4320 square meters and contains a winch for transporting heavy parts inside the workshop at a height of 6.00 meters and a floor dedicated to cafes at a height of 3.5 meters.
- A showroom for cars on an area of 4000 square meter and contains three floors for administrative offices and facilities.

Introduction

Unit 1

The first unit is a car repair workshop on an area of 4320 square meters and contains a crane at height of 6.00 meters and a floor dedicated to cafes and administrative offices at a height of 3.5 meters.

Unit 2

The second unit is a showroom for cars on an area of 4000 square meters and contains two floors for administrative offices for the exhibition and places for customers to rest and provide services.

Unit 3

The third unit is a pedestrian bridge with a width of 3 meters and a length of 20 meters to connect the two units due to the presence of a highway between them.

Pharos University in Alexandria
Faculty of Engineering
Department of Construcion and Mangment

Unit 1

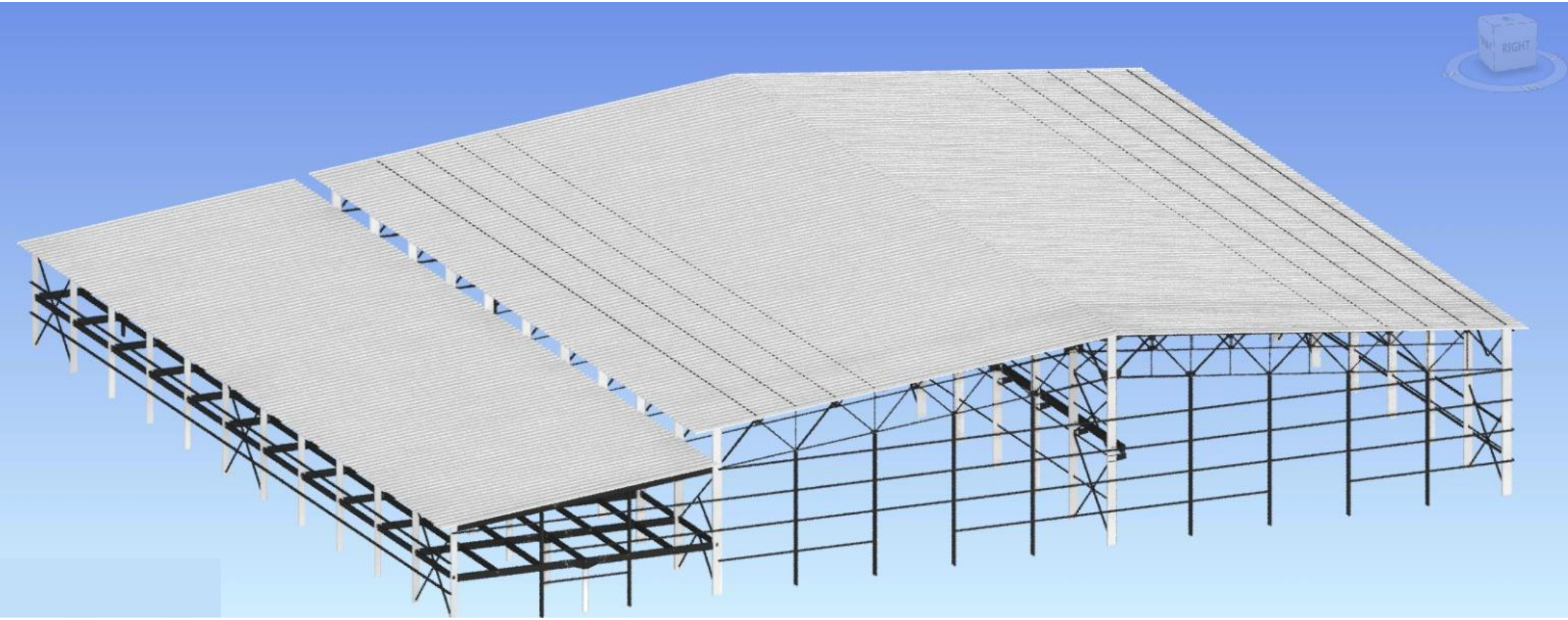

Pharos University in Alexandria
Faculty of Engineering
Department of Construcion and Mangment

Unit 1

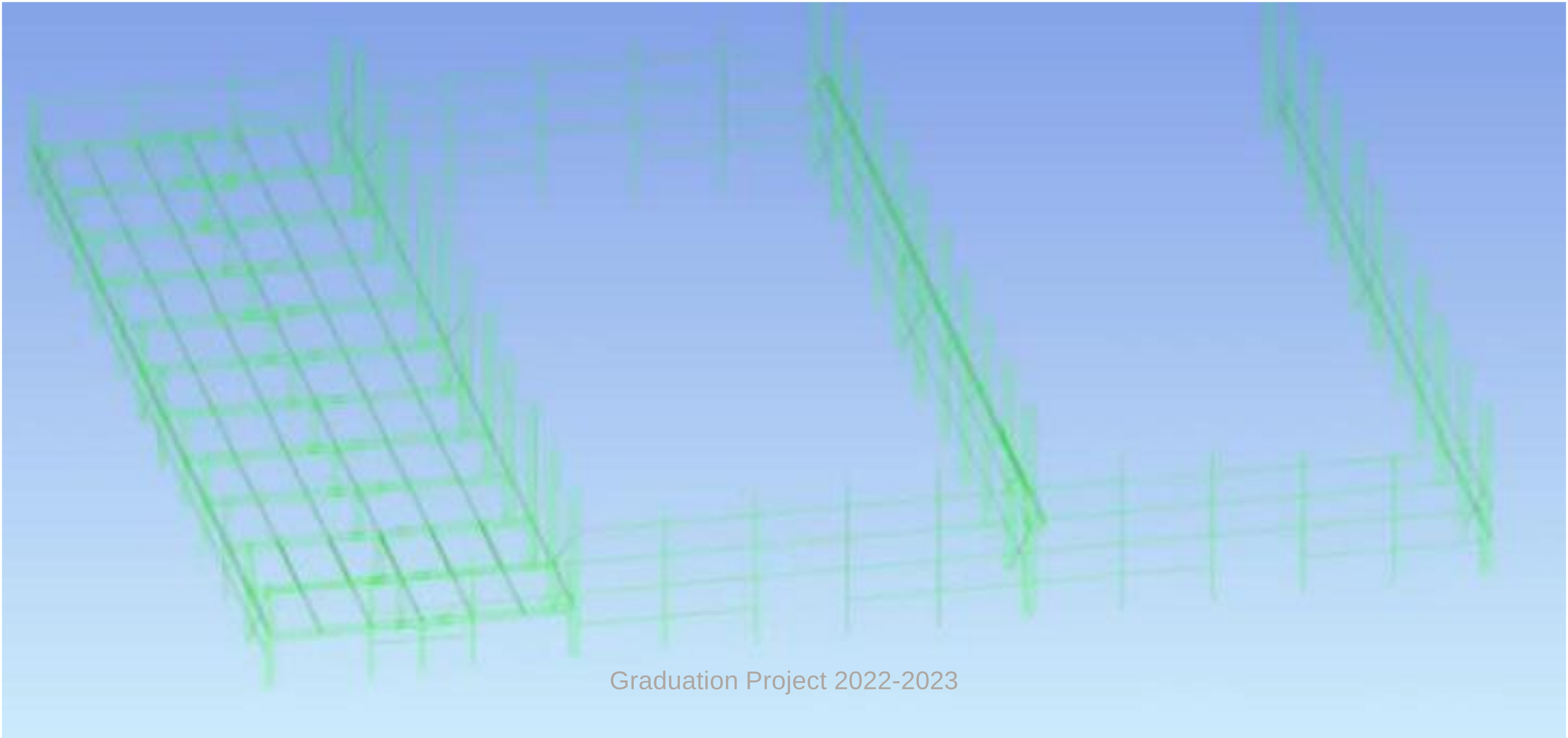

Graduation Project 2022-2023

Pharos University in Alexandria
Faculty of Engineering
Department of Construcion and Mangment

Unit 2

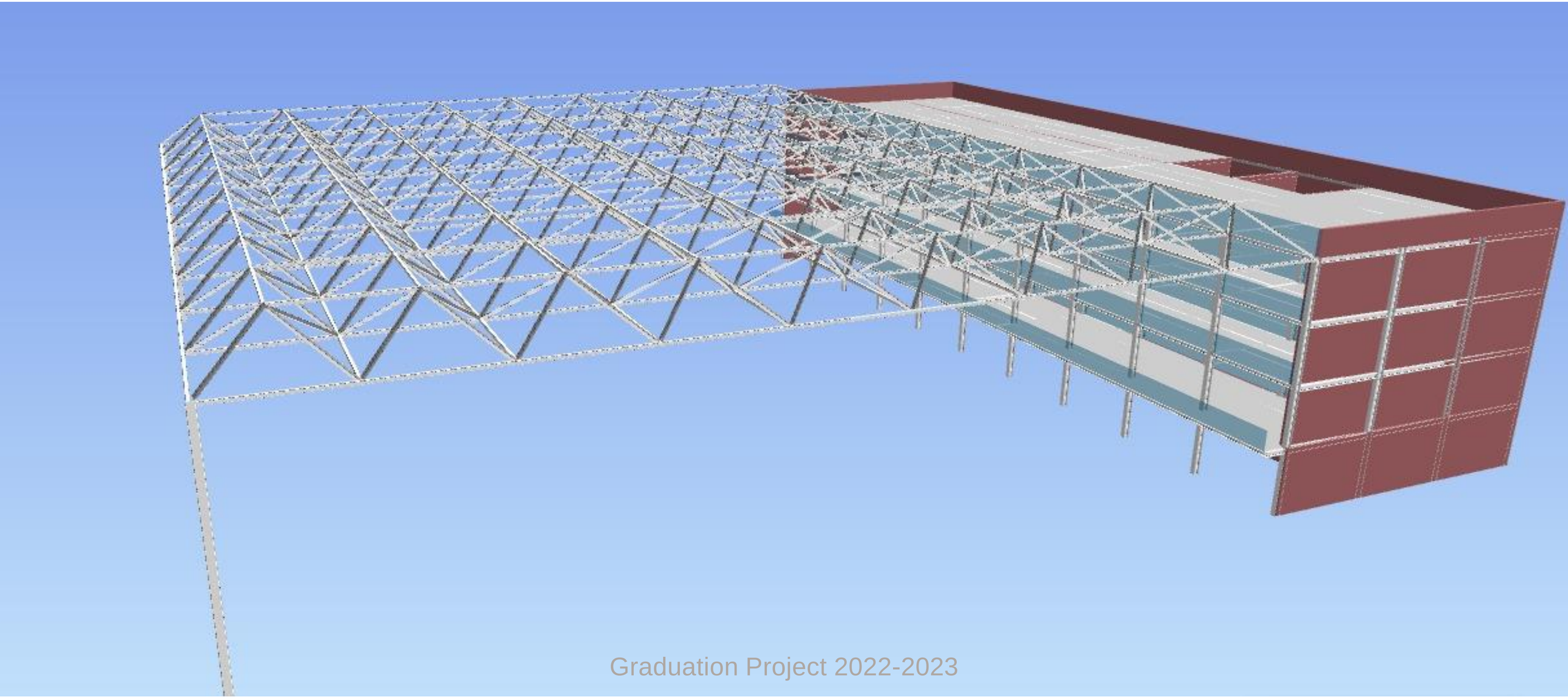

Unit 2

Pharos University in Alexandria
Faculty of Engineering
Department of Construcion and Mangment

Structural 3D model

Pharos University in Alexandria
Faculty of Engineering
Department of Construcion and Mangment

Unit 1

- **Architecture Plan**

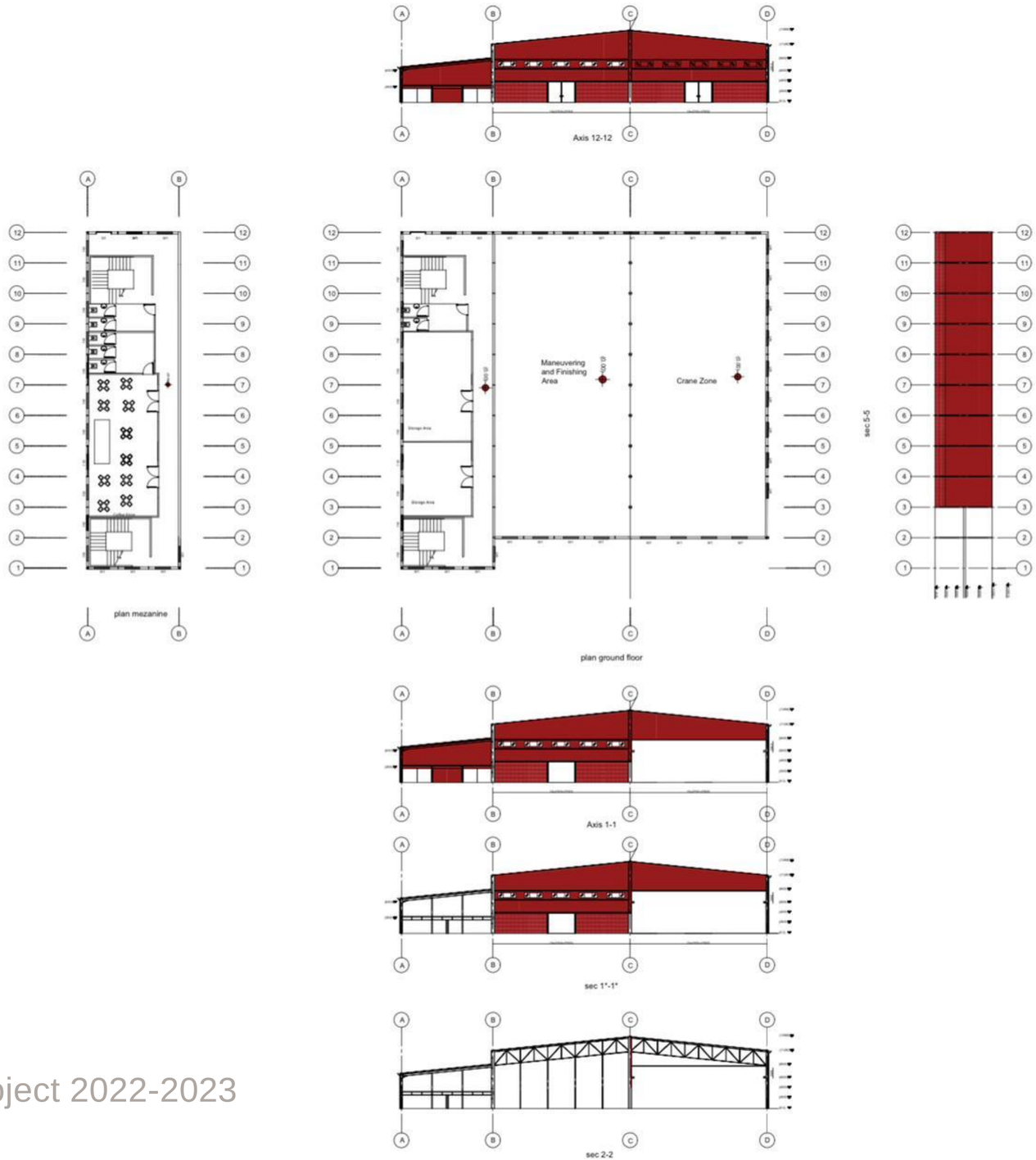

Pharos University in Alexandria
Faculty of Engineering
Department of Construcion and Mangment

Plan & Site view

Area 72x66 m

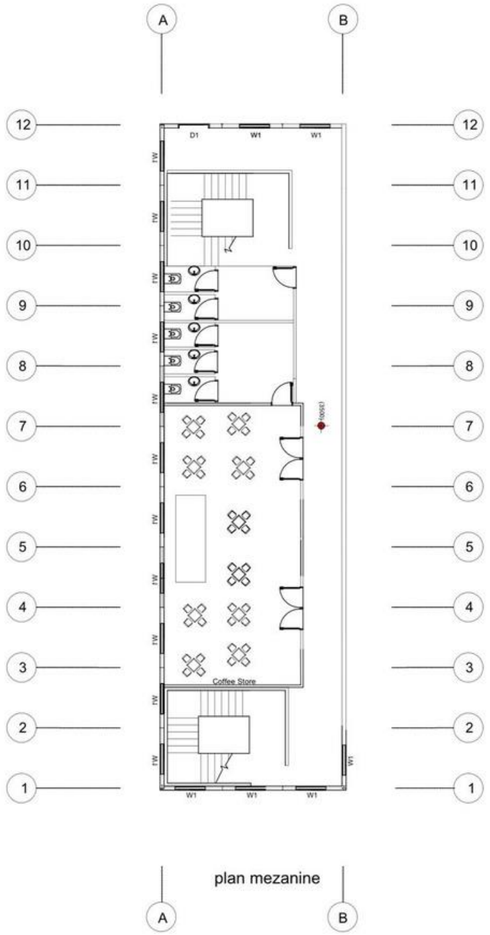

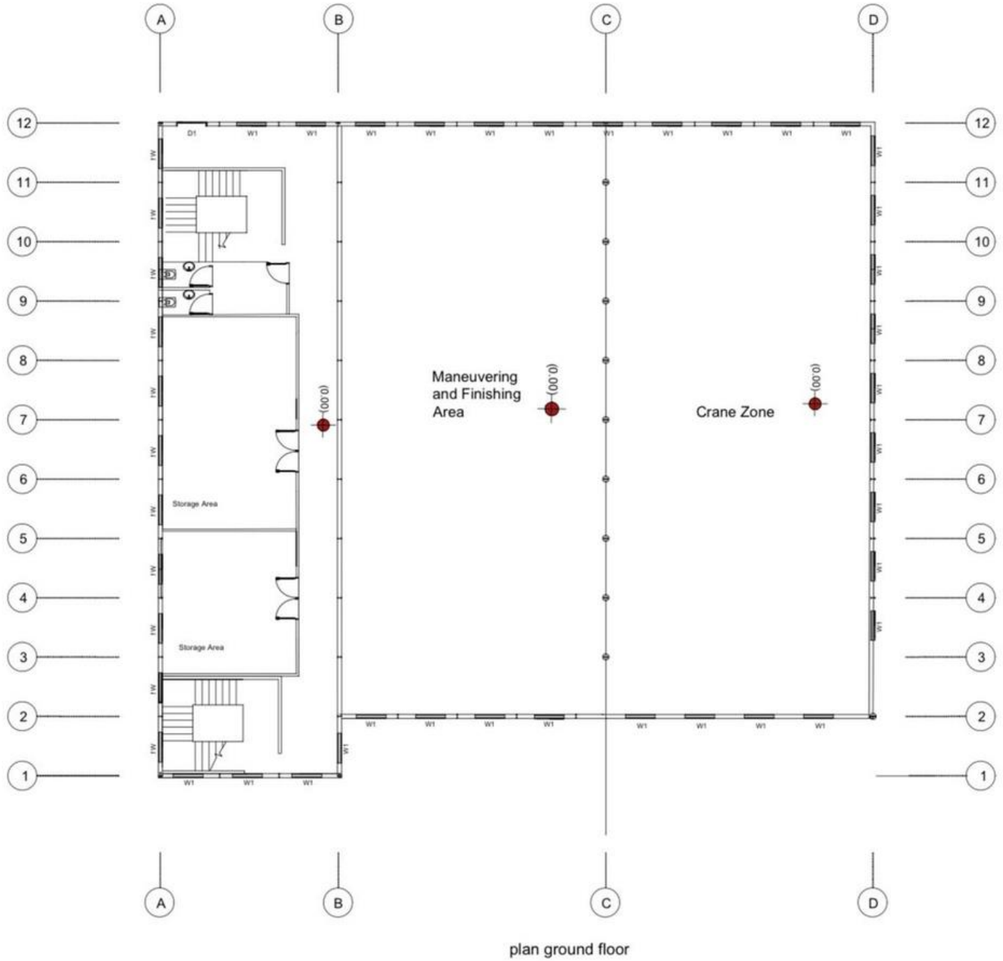

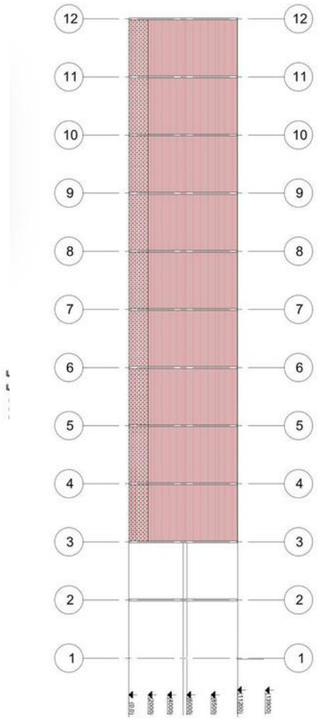

plan ground floor

Pharos University in Alexandria
Faculty of Engineering
Department of Construcion and Mangment

Elevation & End Gable

- Area 72x66 m
- span 54 m Truss
- span 18 m frame
- crane at level (6.00)
- mezzanine at level (3.50)

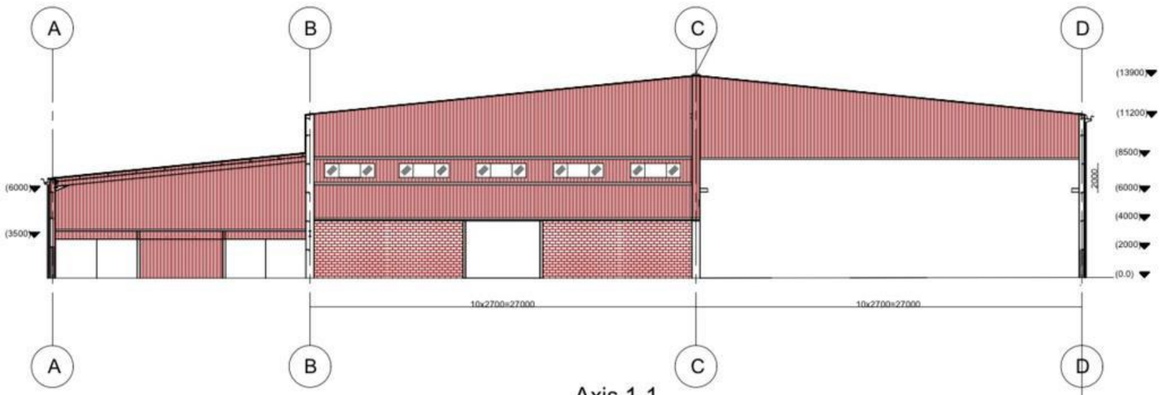

Axis 1-1

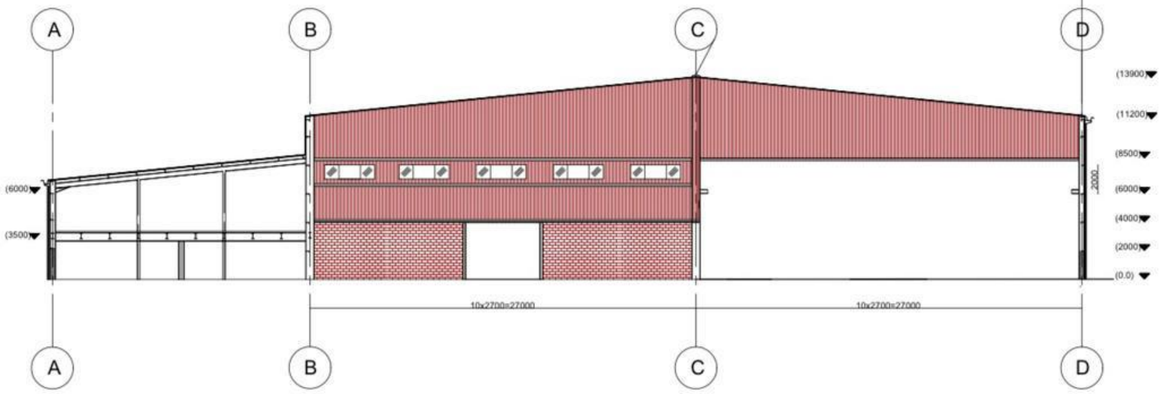

sec 1*-1*

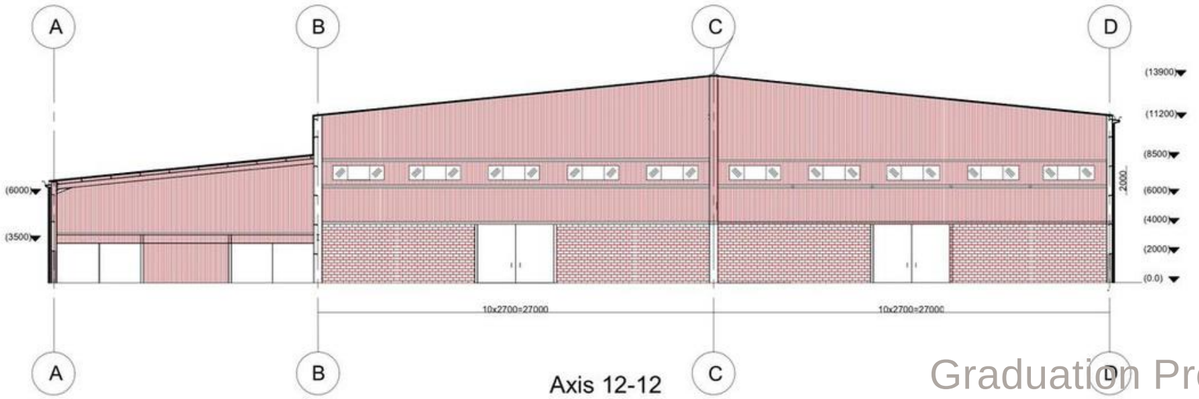

Axis 12-12

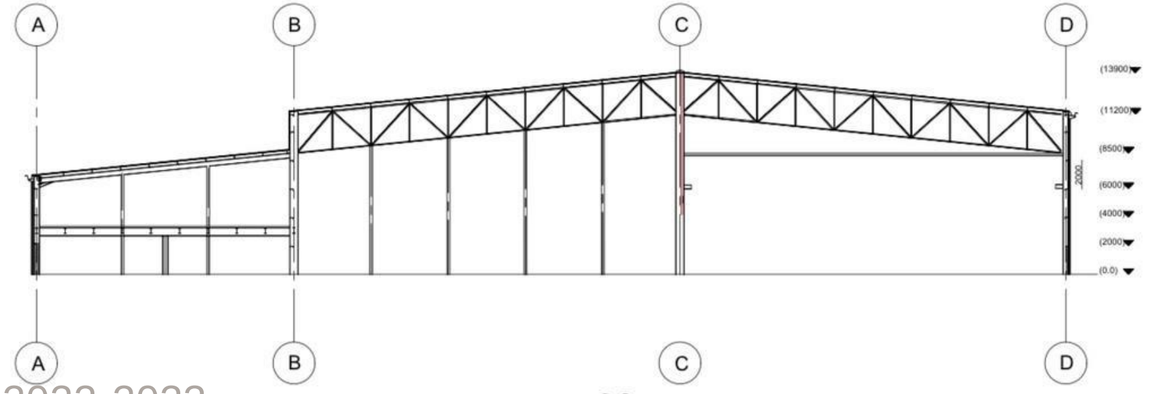

sec 2-2

Pharos University in Alexandria
Faculty of Engineering
Department of Construcion and Mangment

- **Structure Plan**

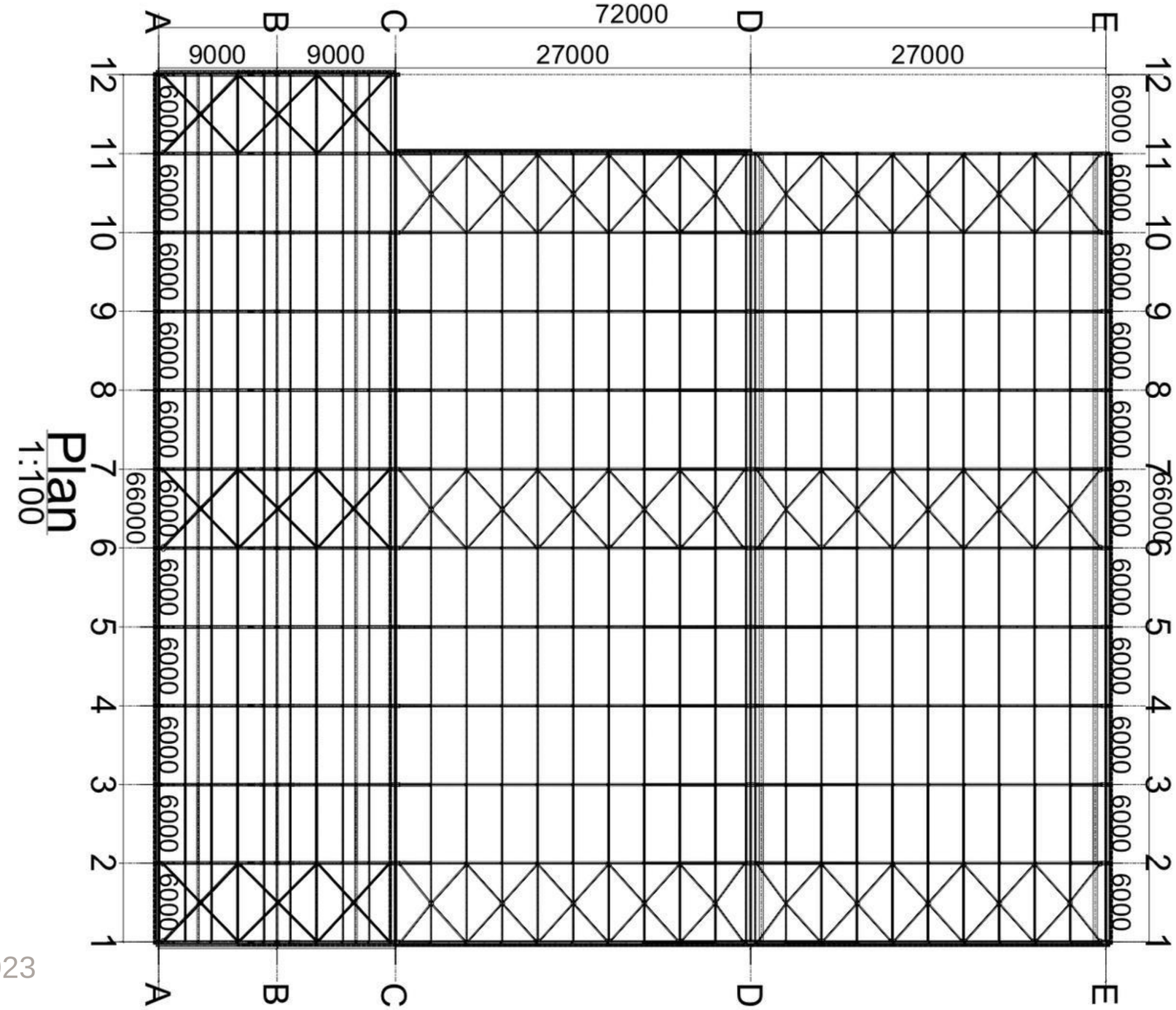

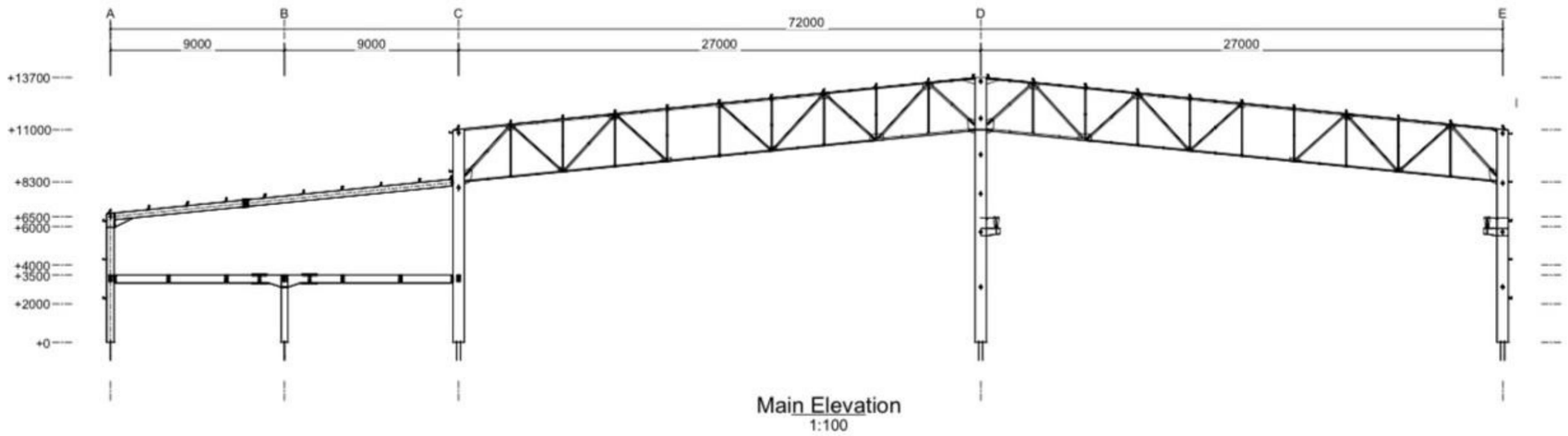

- **Elevation & End gable**

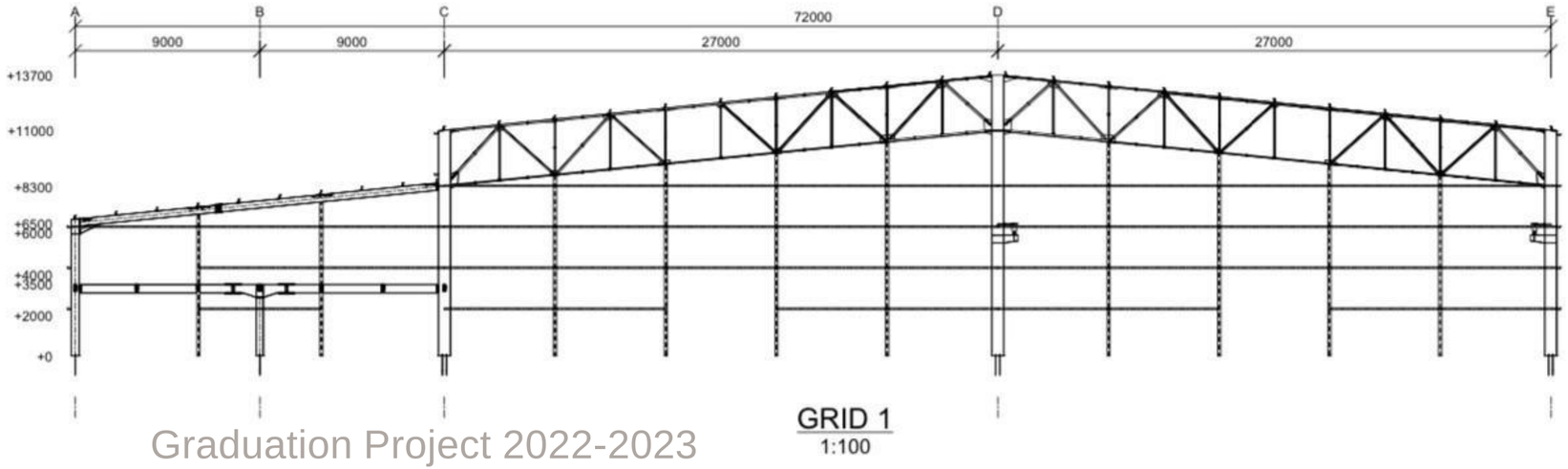

Pharos University in Alexandria
Faculty of Engineering
Department of Construcion and Mangment

- **Side views**

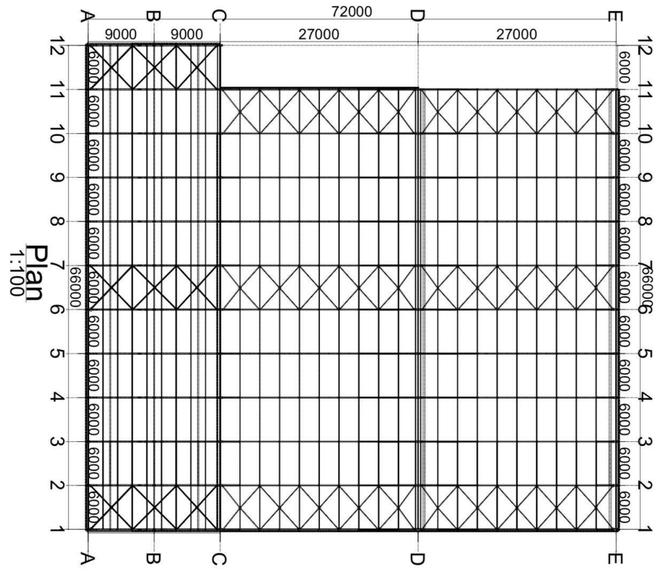

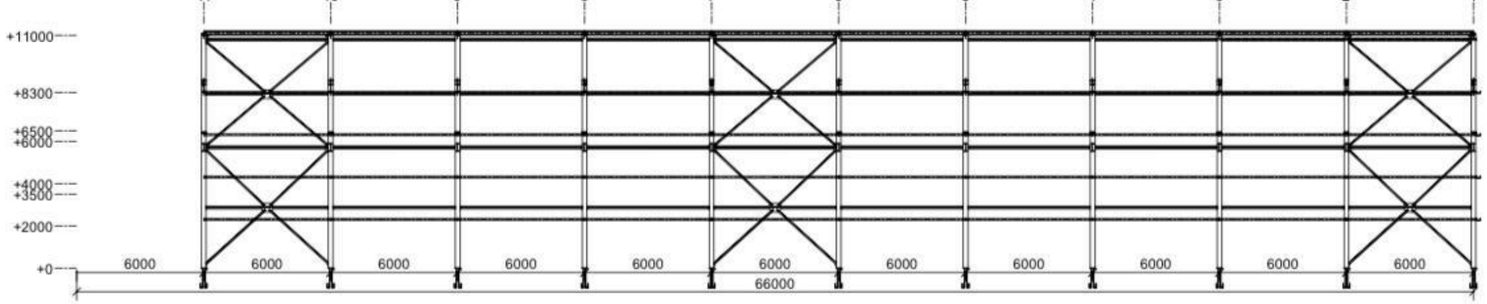

Side View E-E

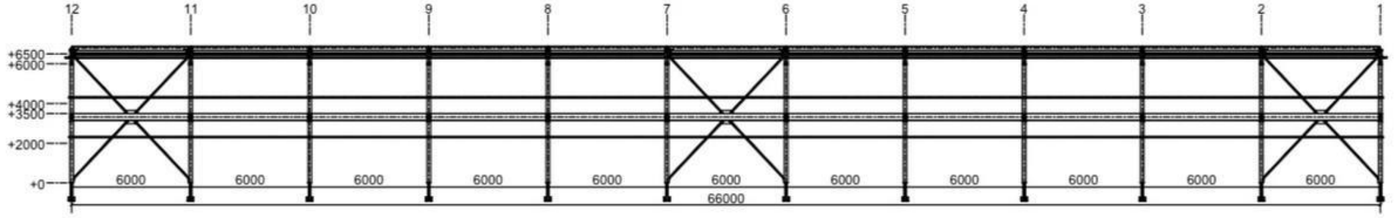

Side View (A-A)
1:100

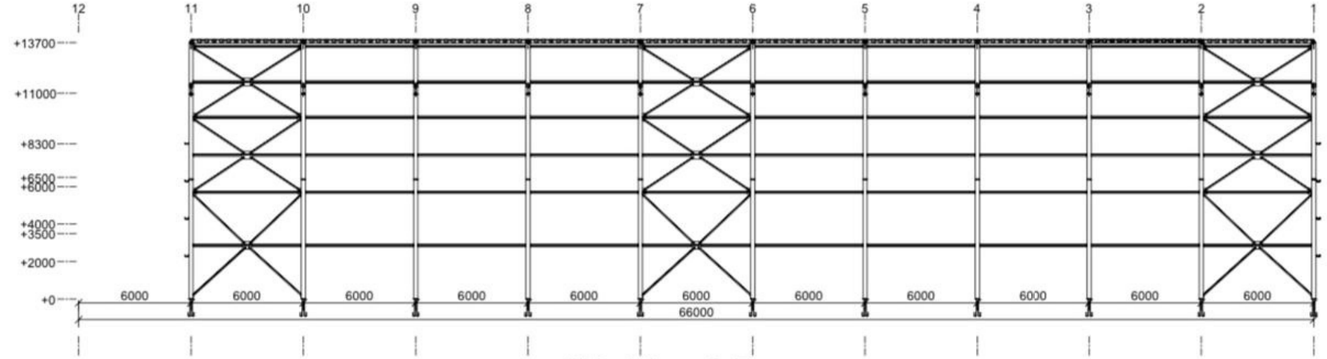

Side View D-D

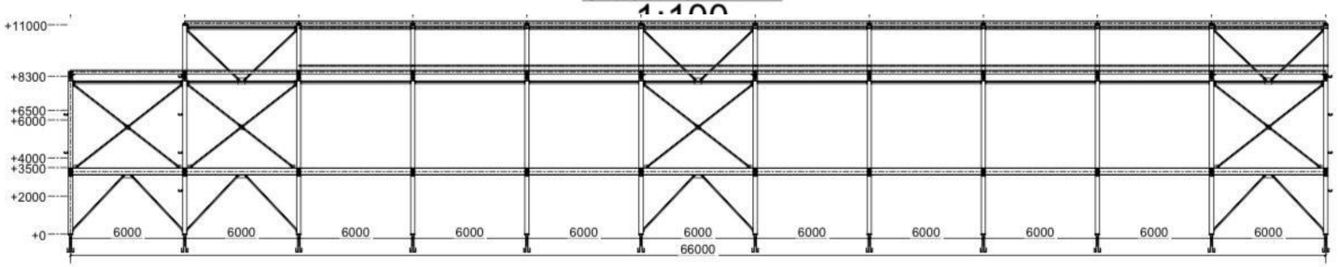

Side View C-C

Pharos University in Alexandria
Faculty of Engineering
Department of Construcion and Mangment

- **Shop Drawing**

C1 & C2

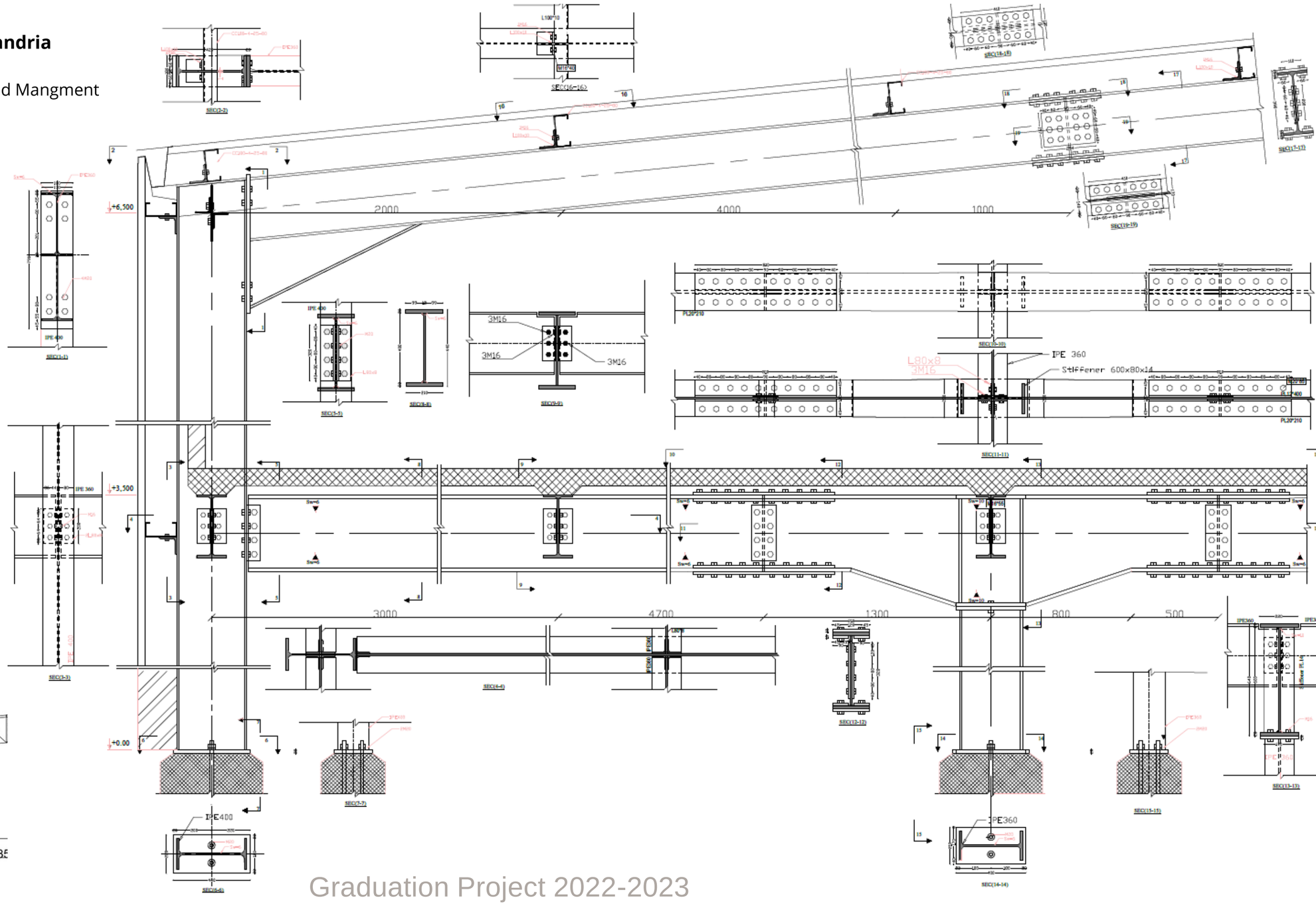

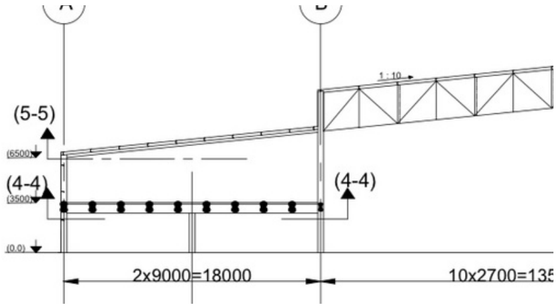

Pharos University in Alexandria
Faculty of Engineering
Department of Construcion and Mangment

- **Shop Drawing**

C3

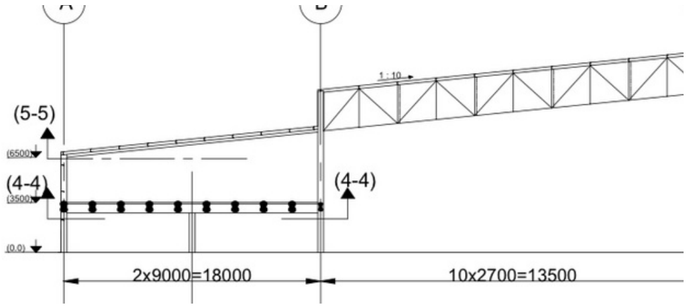

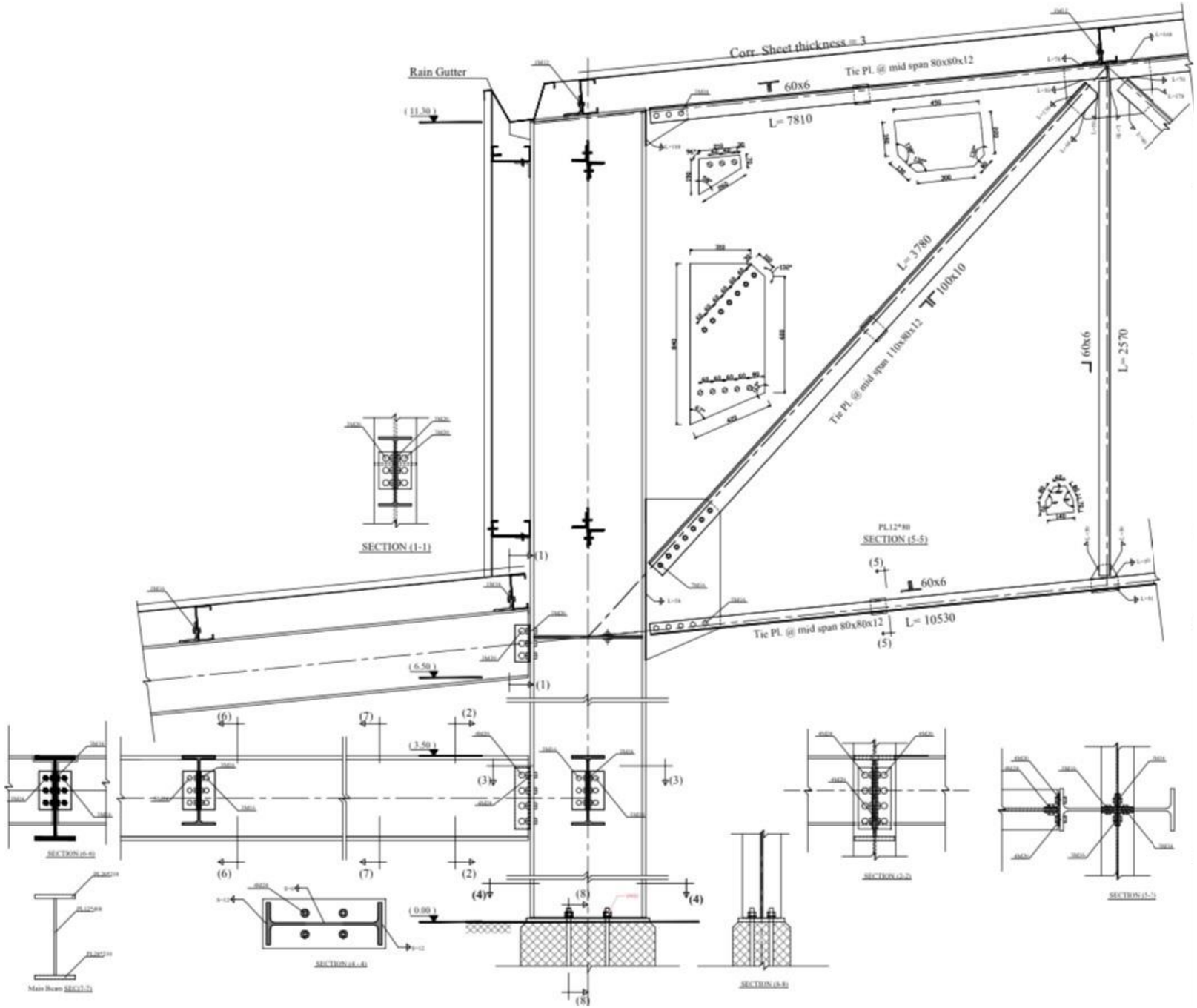

Pharos University in Alexandria
Faculty of Engineering
Department of Construcion and Mangment

- **Shop Drawing**

C4

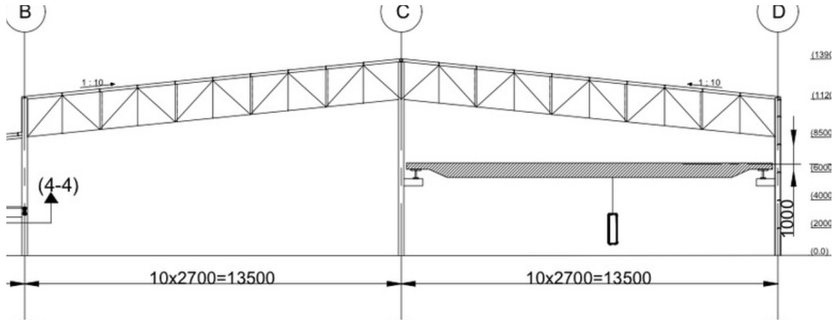

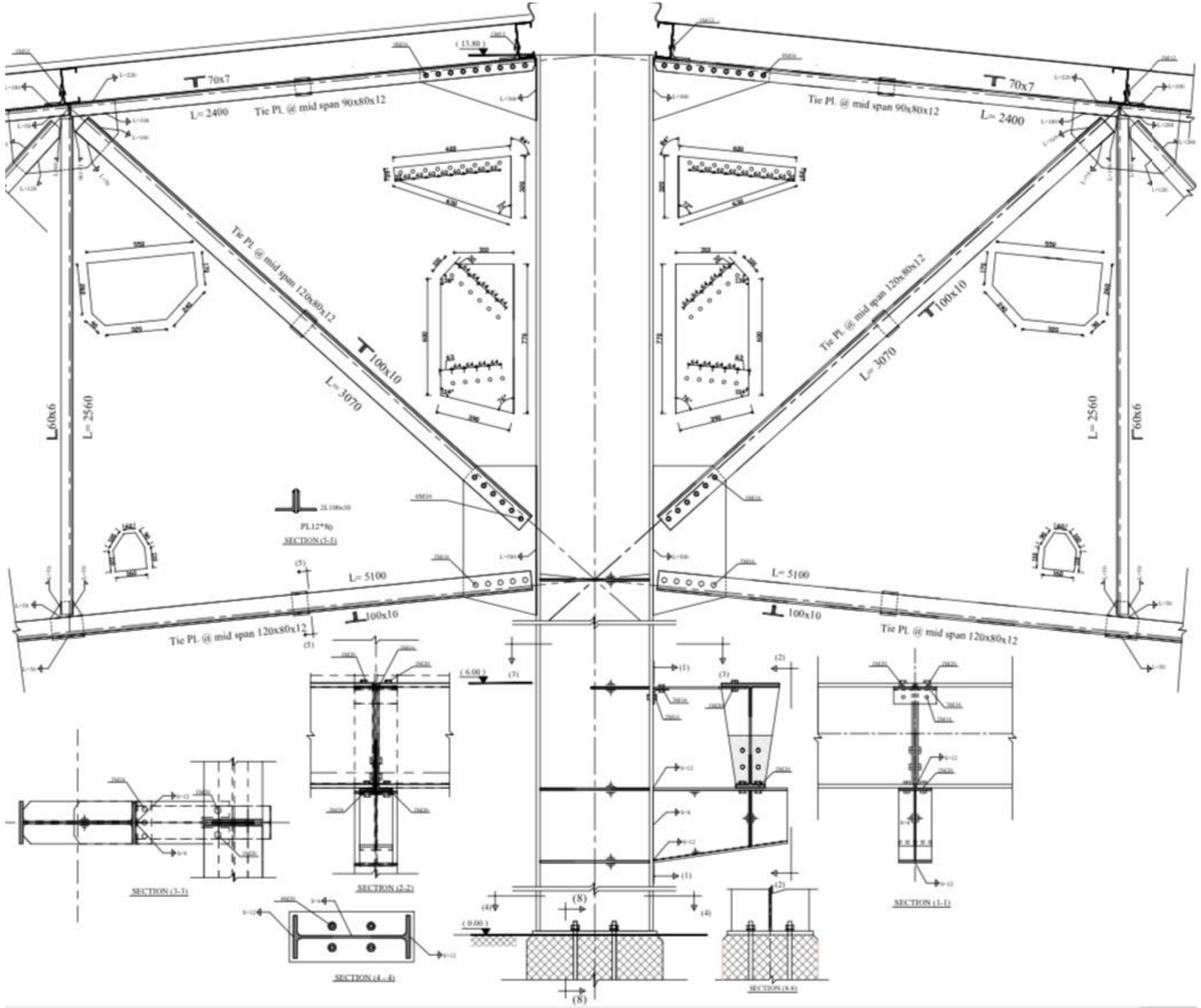

Pharos University in Alexandria
Faculty of Engineering
Department of Construcion and Mangment

- **Shop Drawing**

C5

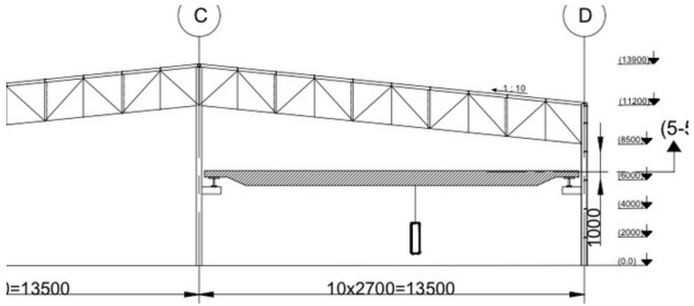

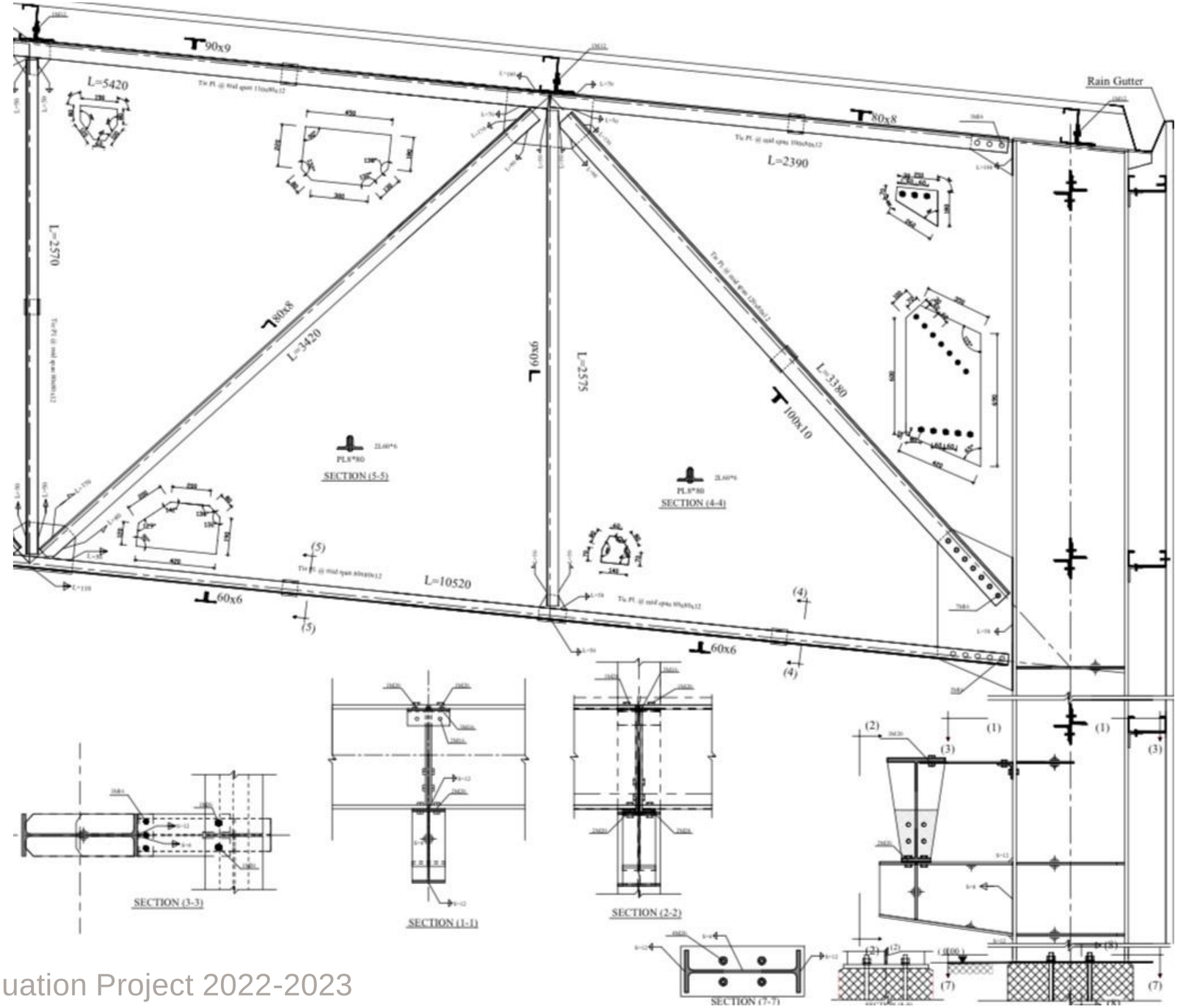

Pharos University in Alexandria
Faculty of Engineering
Department of Construcion and Mangment

- **Shop Drawing**

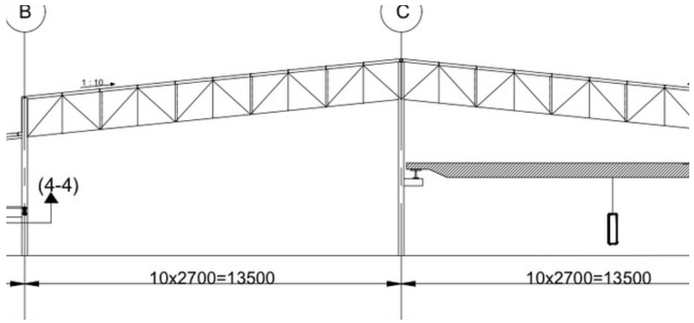

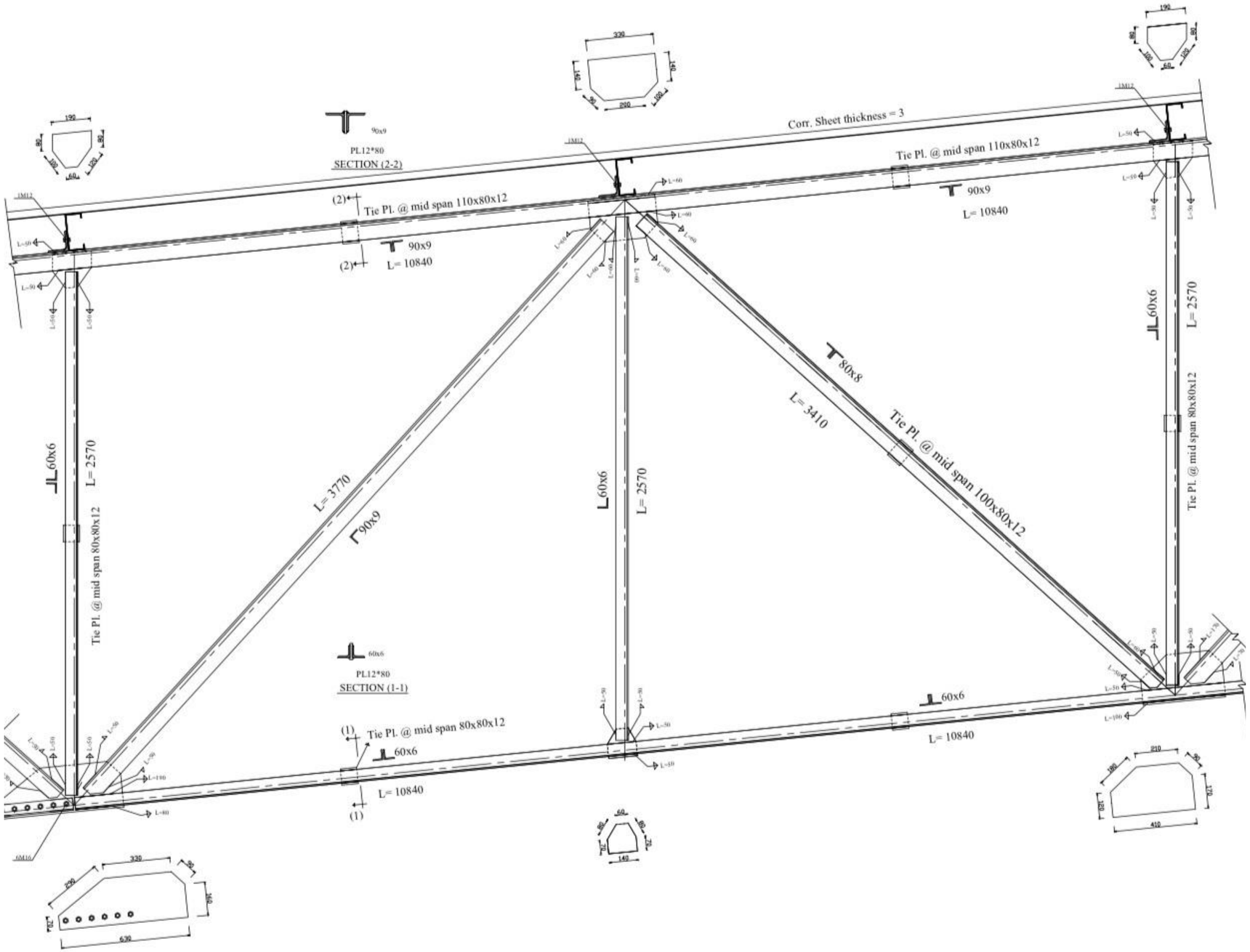

Pharos University in Alexandria
Faculty of Engineering
Department of Construcion and Mangment

- **Shop Drawing**

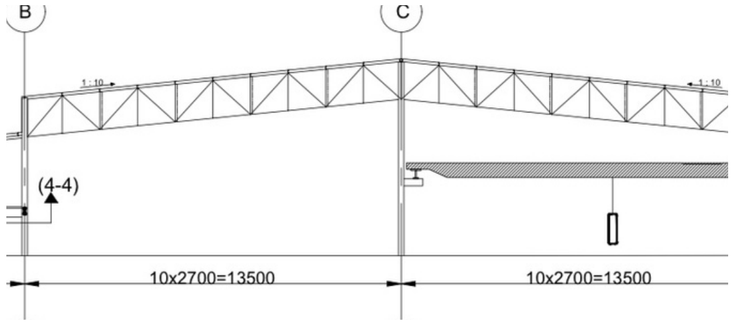

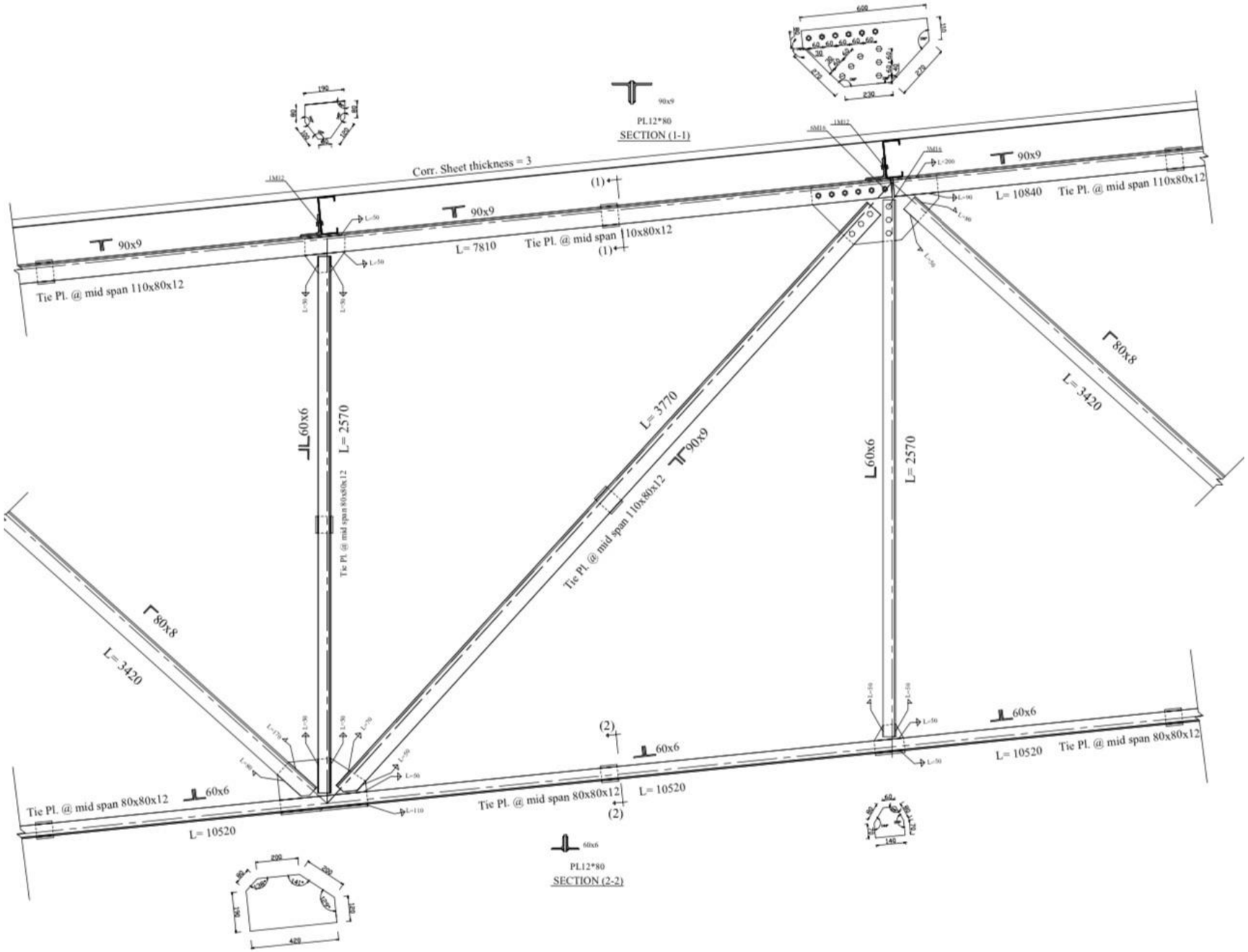

Pharos University in Alexandria
Faculty of Engineering
Department of Construcion and Mangment

- **Shop Drawing**

Vertical bracing

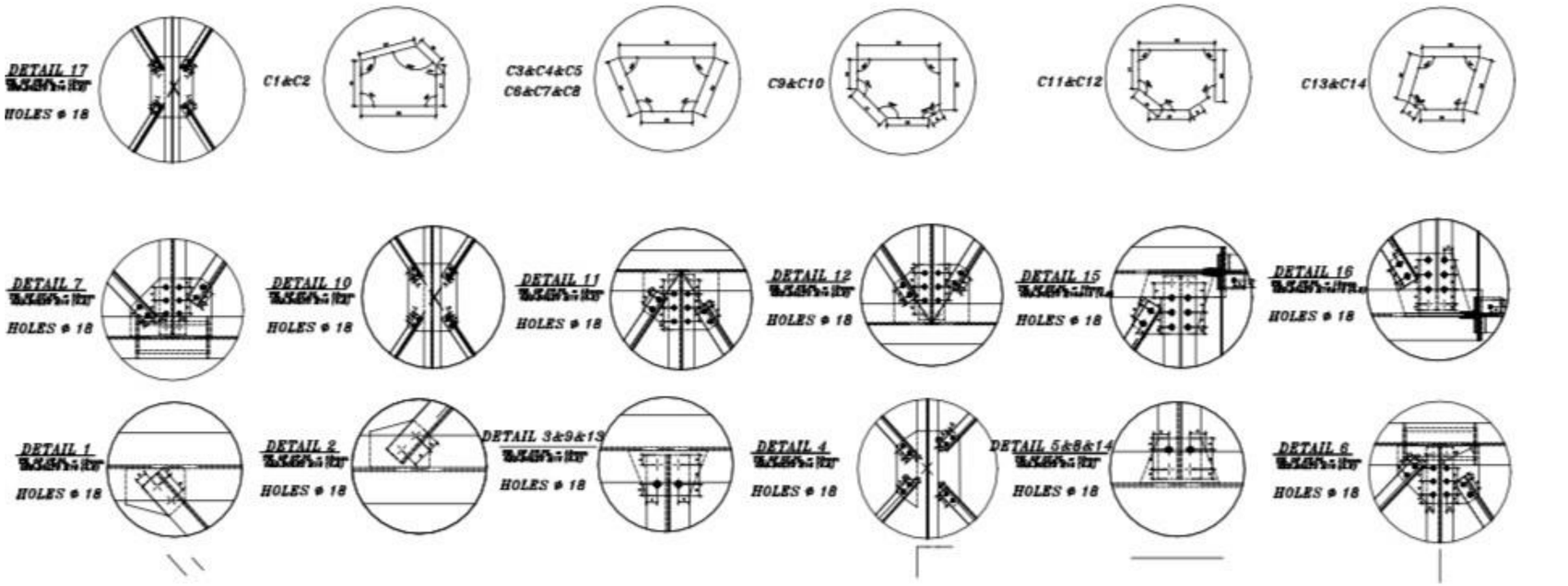

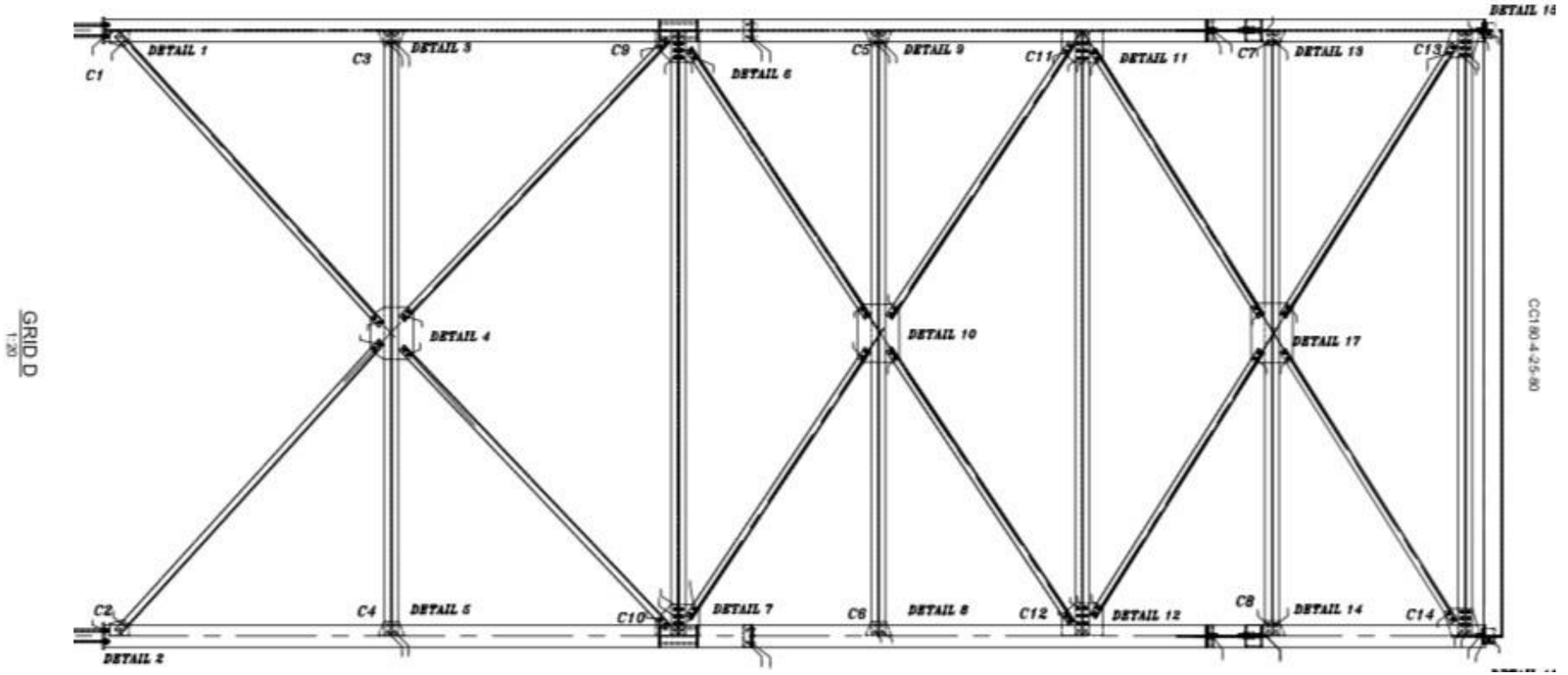

Pharos University in Alexandria
Faculty of Engineering
Department of Construcion and Mangment

- **Shop Drawing**

Vertical bracing

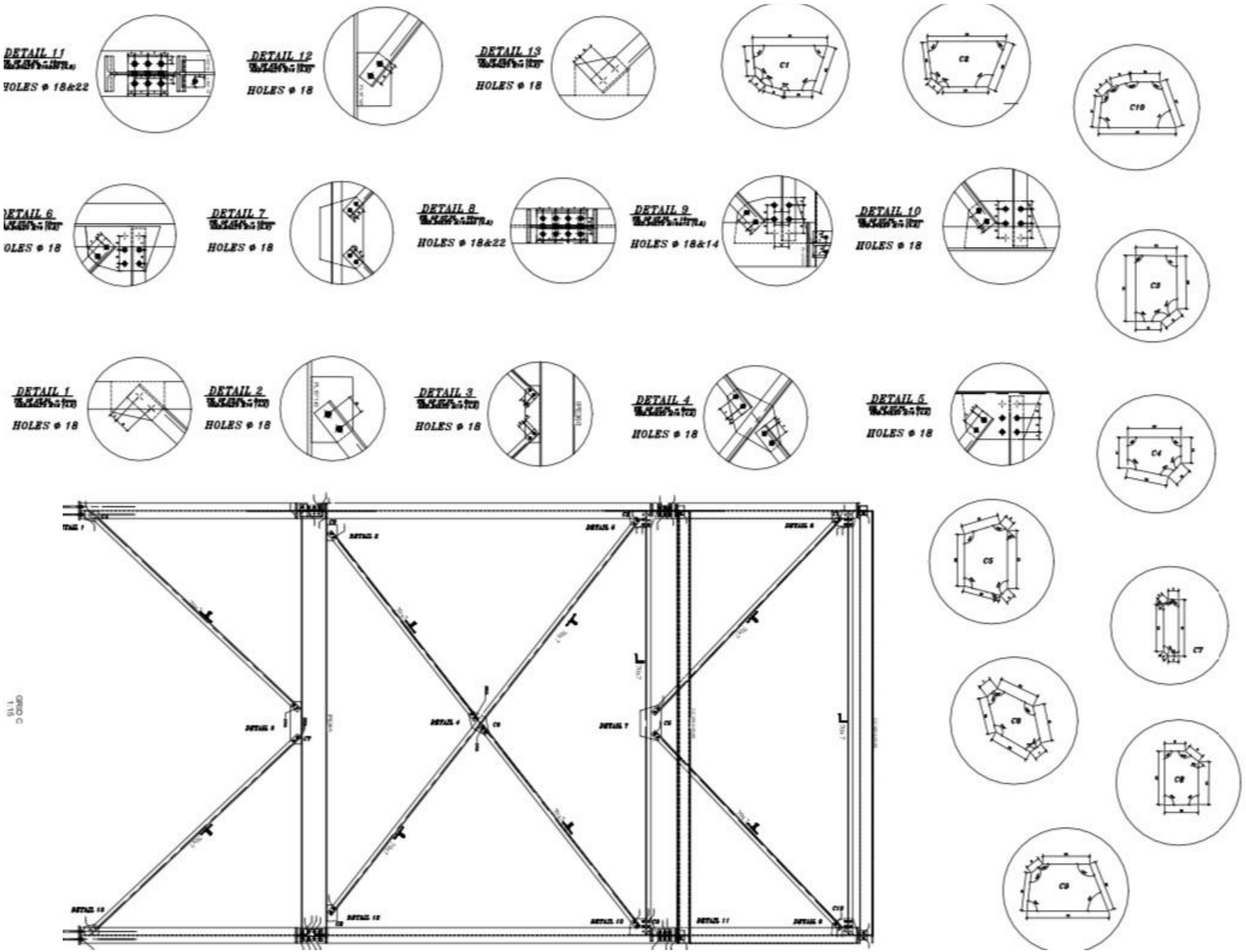

Pharos University in Alexandria
Faculty of Engineering
Department of Construcion and Mangment

Unit 2

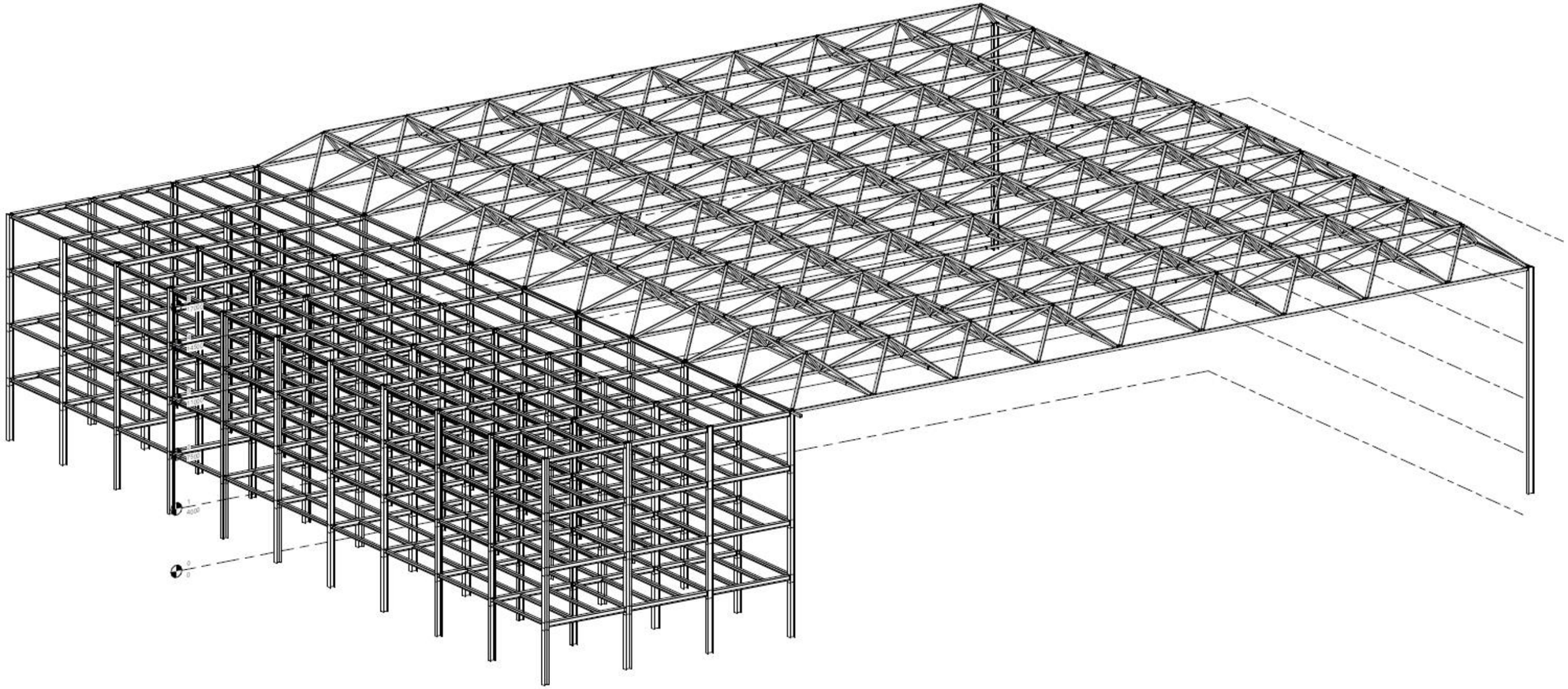

Pharos University in Alexandria
Faculty of Engineering
Department of Construcion and Mangment

Unit 2

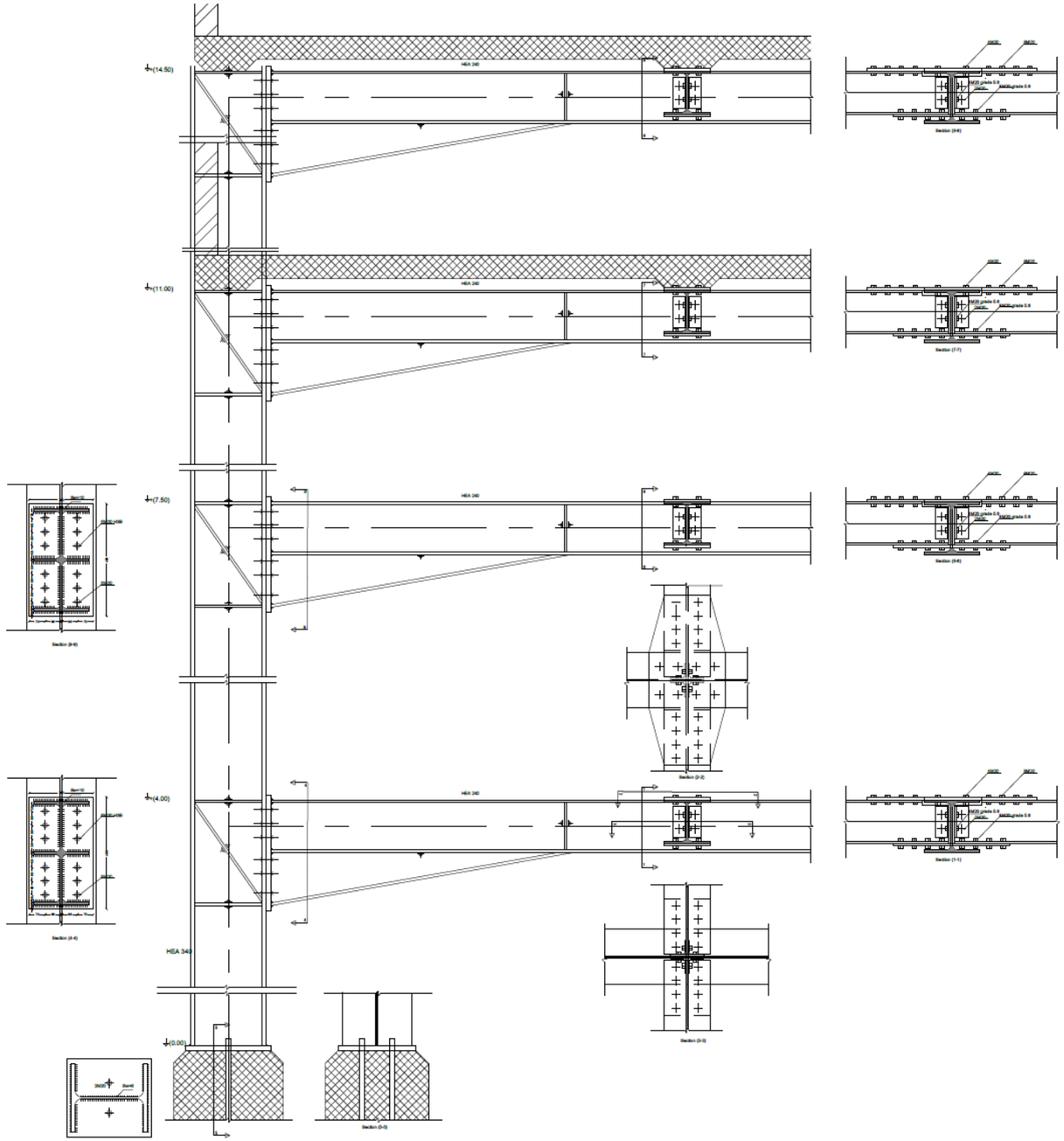

Design Criteria

- *Maximum Moment and it's corresponding Normal Force.*
- *Maximum Normal Force and the moment corresponding to it.*
- *Maximum Shear.*
- *Case A (without wind forces)*
- *Case B (with wind)*

- *For Example*

Member	Combination	Normal	Moment	Maximum shear
1-C5	D+Mz+W.Right+C6+L.Middle	7.60	21.93	8.38
1-C5	#D+C4+L.Left&Right	-25.95	0.00	
1-B2	#D+C6+L.Left&Right	-4.42	-15.53	4.77
1-B2	*D+Mz+C6+L.Left&Right	-4.42	-15.53	

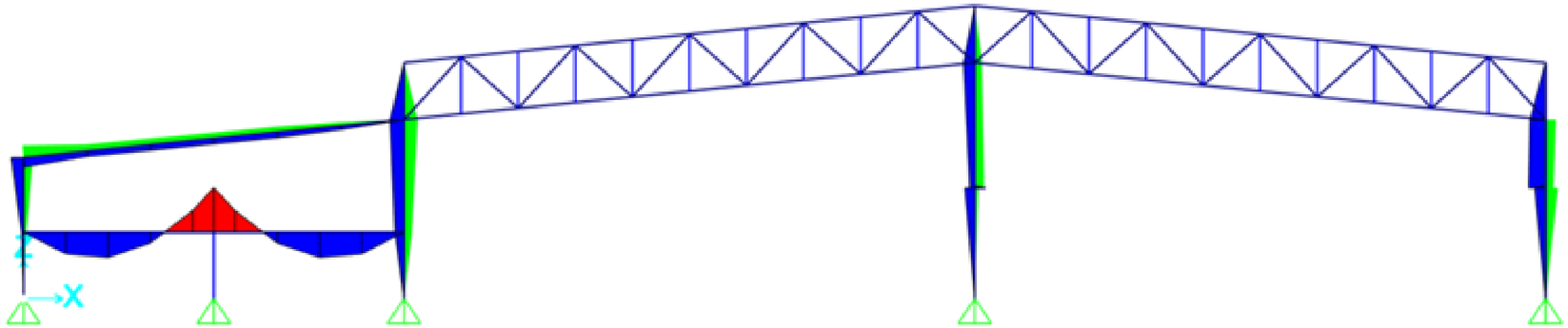

Design

St Grade	F_y t/cm2	F_u t/cm^2	Connection Type
44	2.8	4.4	Welded

Member				Checks									
				F_{act} t/cm2	F_{all} t/cm2	$F_{act} < F_{all}$	Slydenress Ratio					a>3D+t	d>L/60
ID	Type	N	Section				L_{in} (M)	L_{out} (M)	λ_{max}	λ_{all}	$\lambda_{max} < \lambda_{all}$		
Upper Chord													
U1	Angle	Double	80x80x8	0.29	0.6	SAFE	2.7	2.7	111.57	180	SAFE	NO NEED	SAFE
Lower Chord													
L1	Angle	Double	60x60x6	0.71	1.62	SAFE	2.7	5.4	189.47	300	SAFE	NO NEED	SAFE
Diagonals													
D1	Angle	Double	100x100x10	0.36	0.43	SAFE	4	4.8	131.58	180	SAFE	NO NEED	SAFE
Verticals													
V1	Angle	Single	60x60x6	0.01	1.62	SAFE	2.7	3.24	276.92	300	SAFE	NO NEED	SAFE

Design

Beams

	Steel Grade		units	B1
Input date	St 44	F_y	t/cm^2	2.80
		F_u	t/cm^2	4.40
		M_{X1}	t.m	53.10
		M_{X2}	t.m	29.28
		M_y	t.m	0.00
		$W_{L.L}$	t/m^2	0.40
		N	t	0.00
		Q	t	29.69
		Design Case		DL+LL
		Length	m	9.00
		L_{uact}	m	1.50
Choose		Z_X	cm^3	6637.09
		Choose		IPE 600
Section Safety				Safe

Beams

	Steel Grade		units	C1
Input Data	St 44	F_y	t/cm^2	2.80
		F_u	t/cm^2	4.40
		M_{X1}	t.m	15.53
		M_{X2}	t.m	0.00
		M_y	t.m	0.00
		N	t	5.19
		Q	t	3.92
		Design Case		DL+LL
		Bracing spacing	m	2.00
		h	m	6.50
		Base Type		Hinged
		k		2.25
		L_{bin}	m	14.63
		$L_{u\,act}$	m	2.00
Choose		Z_X	cm^3	1941.25
		Choose		IPE 400
Section Safety				Safe

Some of the problems we encountered

- *Beam B1 in unit 1*

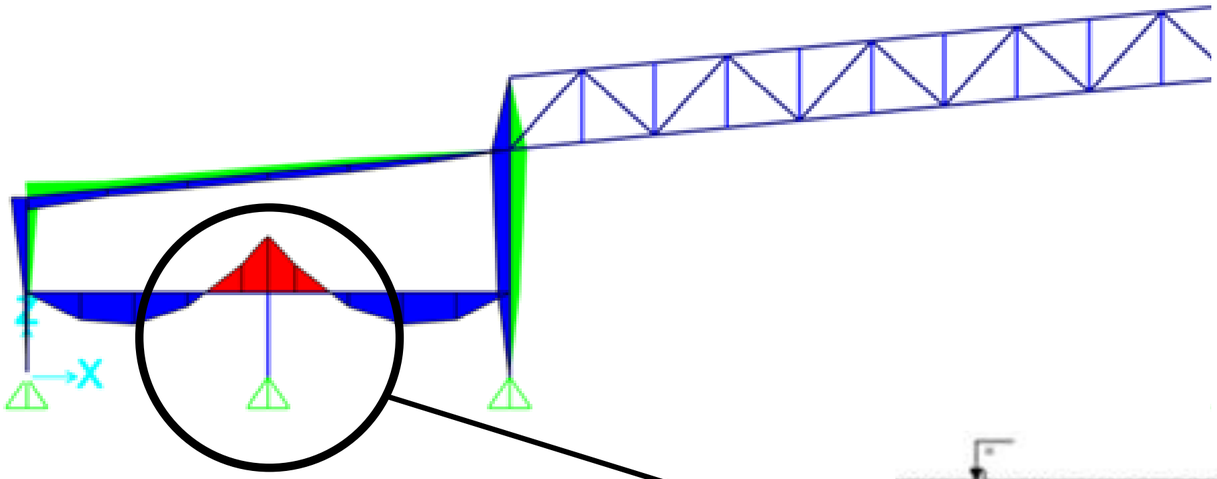

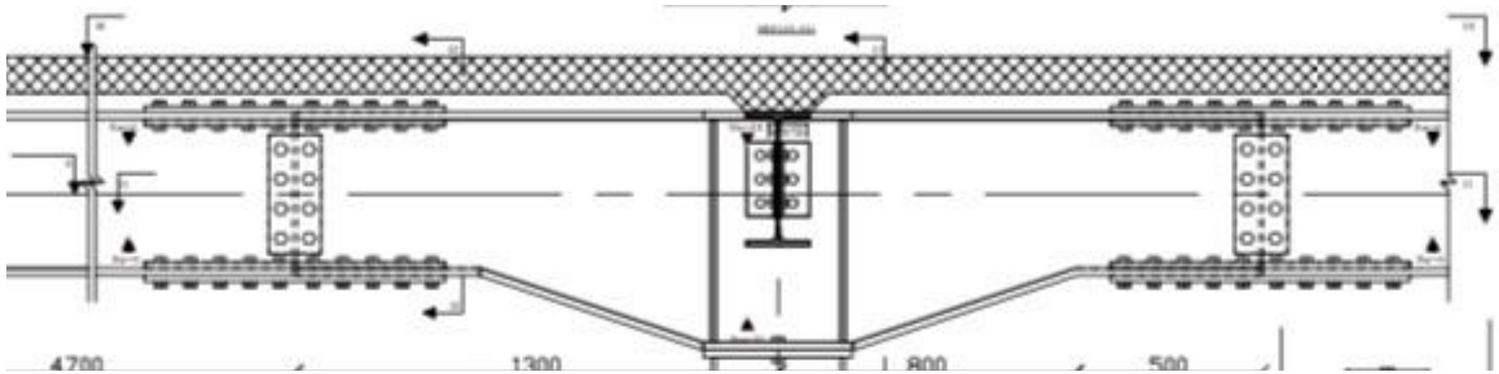

Some of the problems we encountered

- *Main beam deflection in unit 2*

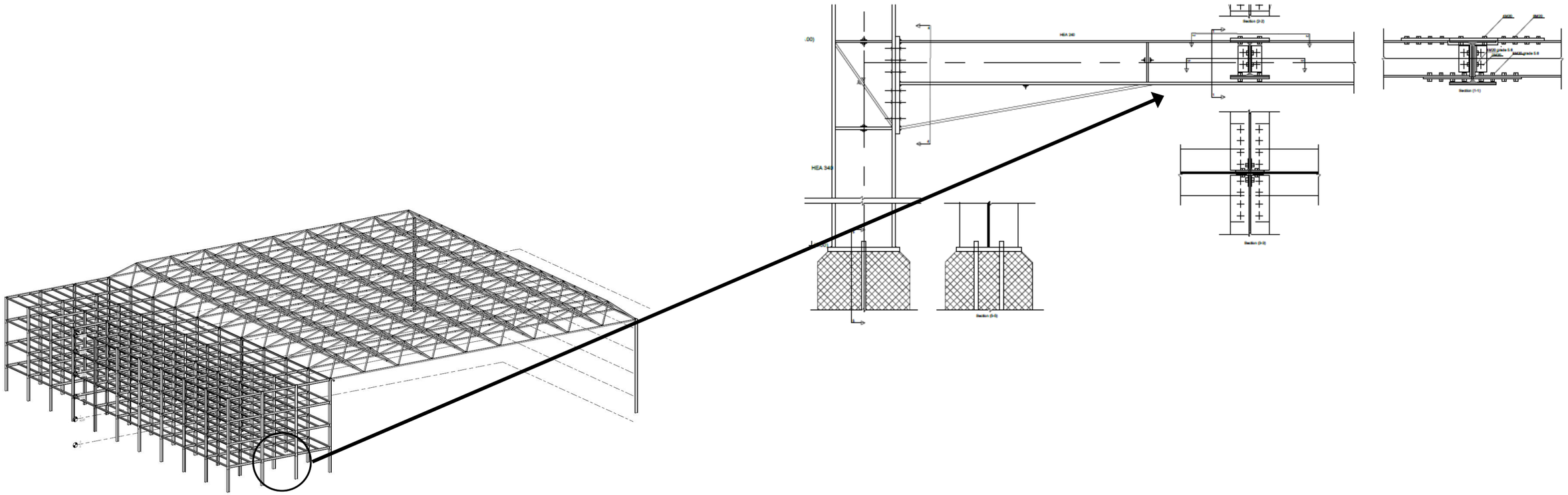

Fabrication

- **Field pictures**

Crane

Drilling Nails Holes

Connections

Crane

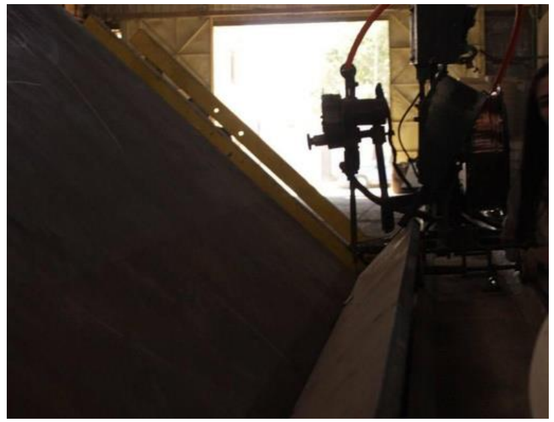

Weld

Plate

Pharos University in Alexandria
Faculty of Engineering
Department of Construcion and Mangment

Conclusion

Structural steel shapes, sizes, chemical composition, mechanical properties such as strengths, storage practices, etc., are regulated by standards in most industrialized countries. That needs to be studied carefully to establish a cost-efficient structure that can be practical and sustainable.

Pharos University in Alexandria
Faculty of Engineering
Department of Construcion and Mangment

References

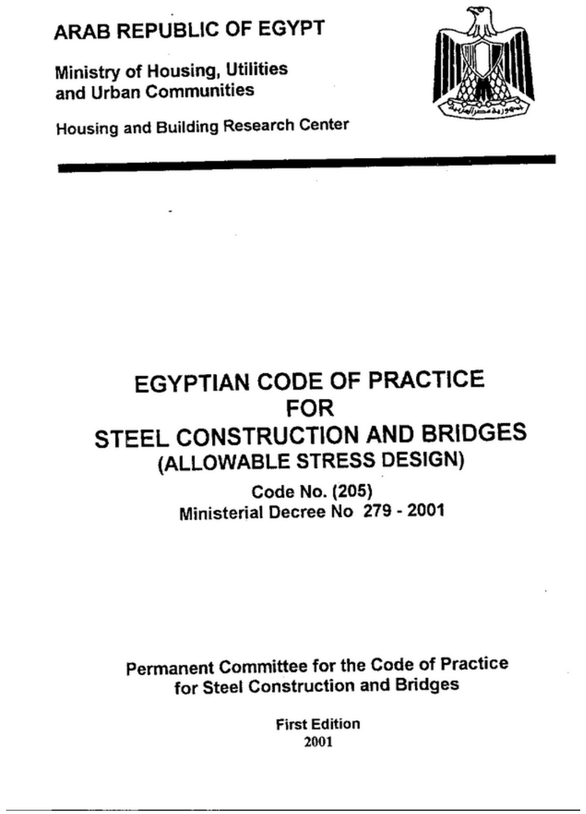

ARAB REPUBLIC OF EGYPT

Ministry of Housing, Utilities
and Urban Communities

Housing and Building Research Center

EGYPTIAN CODE OF PRACTICE
FOR
STEEL CONSTRUCTION AND BRIDGES
(ALLOWABLE STRESS DESIGN)

Code No. (205)
Ministerial Decree No 279 - 2001

Permanent Committee for the Code of Practice
for Steel Construction and Bridges

First Edition
2001

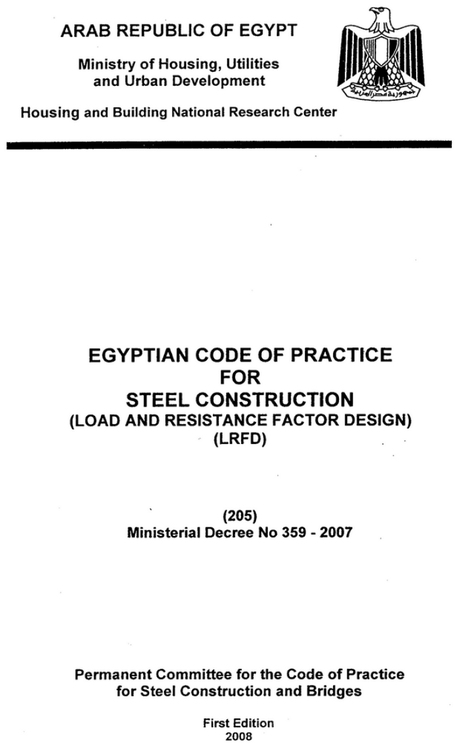

ARAB REPUBLIC OF EGYPT

Ministry of Housing, Utilities
and Urban Development

Housing and Building National Research Center

EGYPTIAN CODE OF PRACTICE
FOR
STEEL CONSTRUCTION
(LOAD AND RESISTANCE FACTOR DESIGN)
(LRFD)

(205)
Ministerial Decree No 359 - 2007

Permanent Committee for the Code of Practice
for Steel Construction and Bridges

First Edition
2008

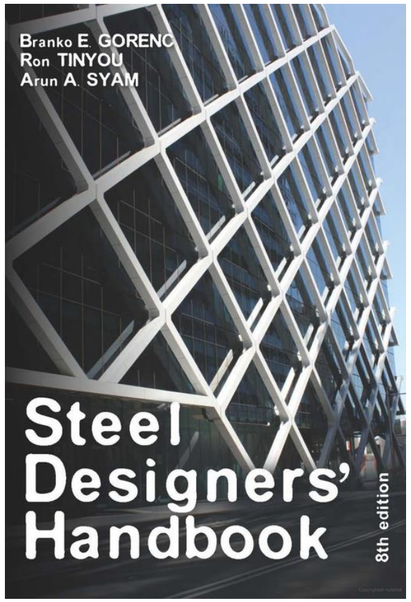

Steel Designers' Handbook 8th Edition
By Branko Gorenc, Gorenc B Tinyou R Syam a

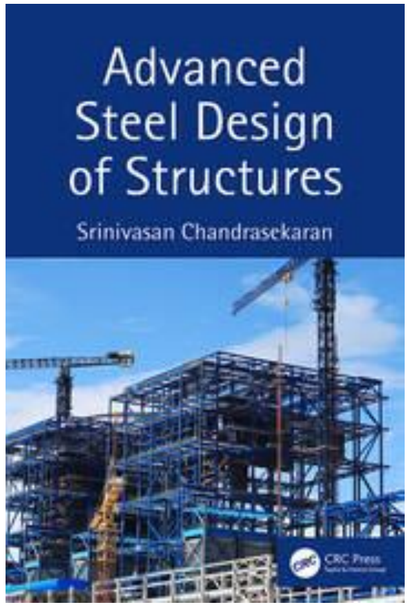

Chandrasekaran, S. (2019). Advanced steel design of structures. CRC press.

Pharos University in Alexandria
Faculty of Engineering
Department of Construcion and Mangment

Supervised By

Prof. Dr. Mohamed El-Ghandour **Eng. Ahmed Abd El-Nasser**

Mohamed Adel Elshrkawi
201801750

Graduation Project 2022-2023

CONTENT

- Introduction
- Project Aims
- General informations
- General layouts
- Straining actions
- 3d models
- Shopdrawings
- Working on

INTRODUCTION

- Population density
- previous experiences
- Egypt 2030
- New cities
- Motivations for internal migration.

PROJECT AIMS

- make a general industrial area in our new national cities as our Egypt vision 2030.
- include an standardized workshops for small and medium-sized enterprises.
- funded by government as a loan with zero inrest.
- to encourage the internal migration to the new cities.
- To have an industrial hub in every new city.

Pharos University in Alexandria
Faculty of Engineering
Department of Construcion and Mangment

GENERAL INFORMATION

Consist of 3 workshops with constat clear height = 10m

Workshop (A) with dimensions of (40m *25m) and area(1400m2) for intermediate-sized enterprises.

Workshop (B) with diminsions of (40m*25m) and area (1000m2) for medium-sized enterprises.

Workshop (C) with dimensions of (20m*20m) and area (400m2) for small-sized enterprises.

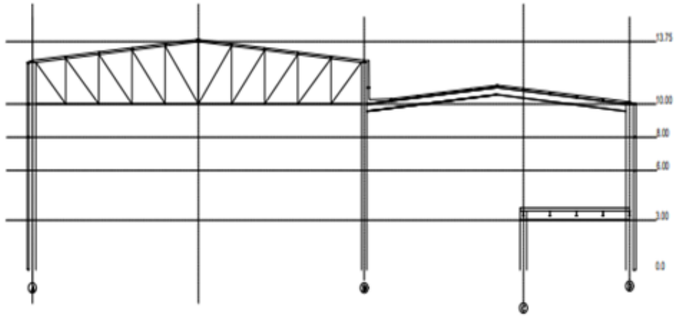

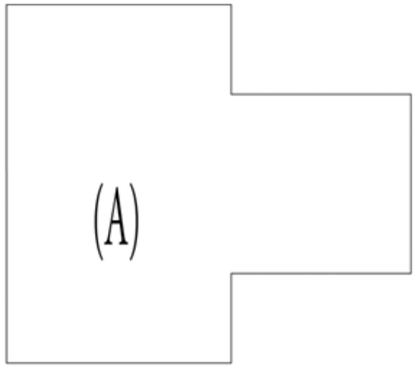

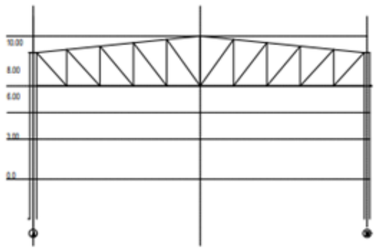

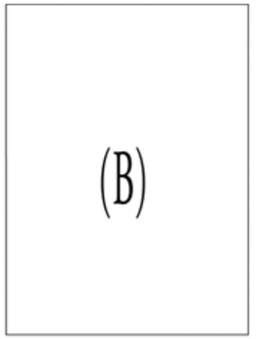

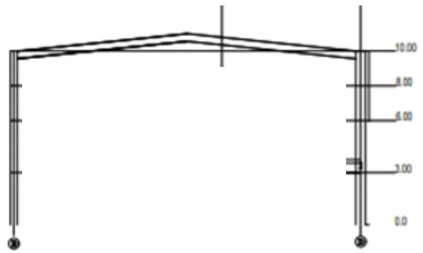

Pharos University in Alexandria
Faculty of Engineering
Department of Construcion and Mangment

GENERAL LAYOUTS

- Total area = 180200 m2
- Workshop (A) 12 unit
- Workshop (B) 44 unit
- Workshop (C) 32 unit

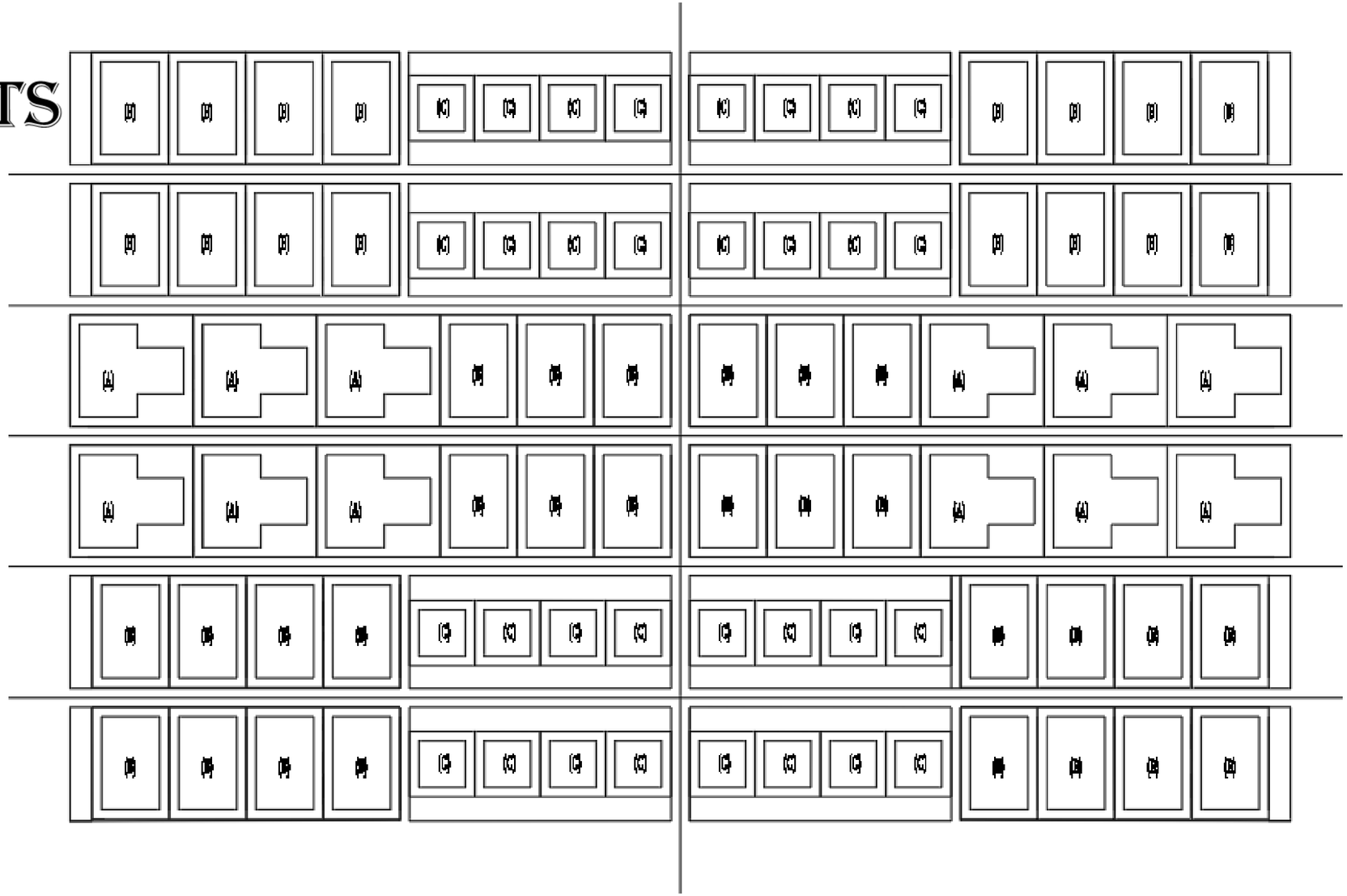

Pharos University in Alexandria
Faculty of Engineering
Department of Construcion and Mangment

STRUCTRUAL SYSTEM

Workshop (A)

Structural plan

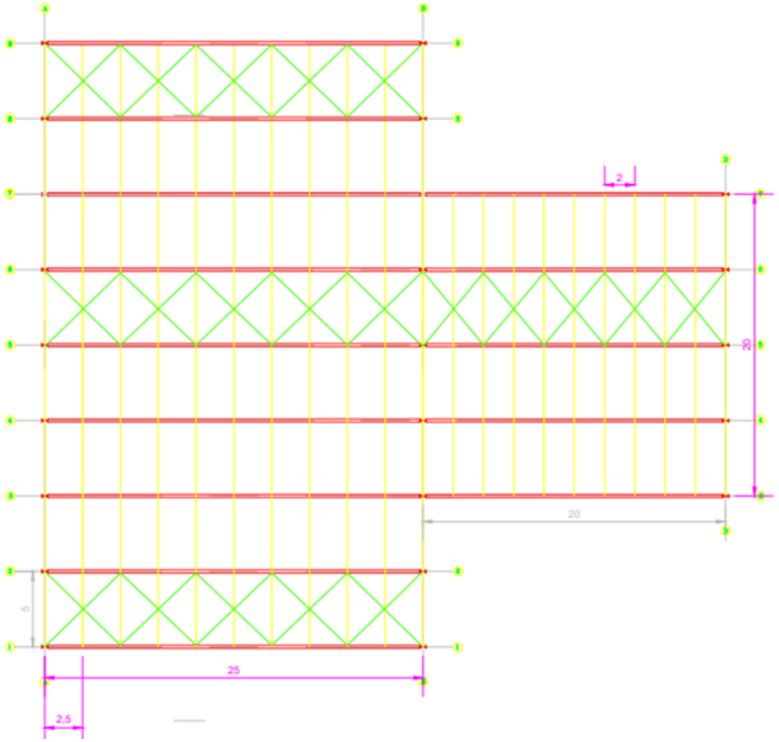

Structural sideview

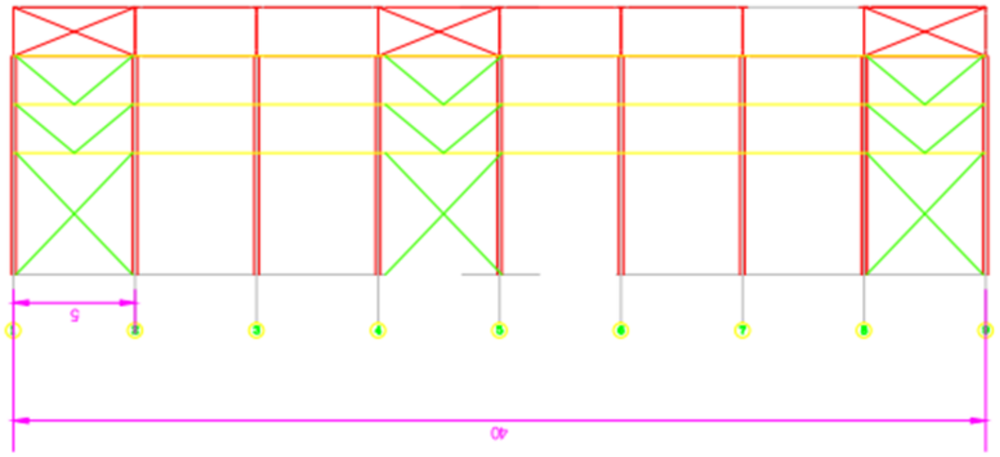

SIDE VIEW SECTION A-A

Structural elevation

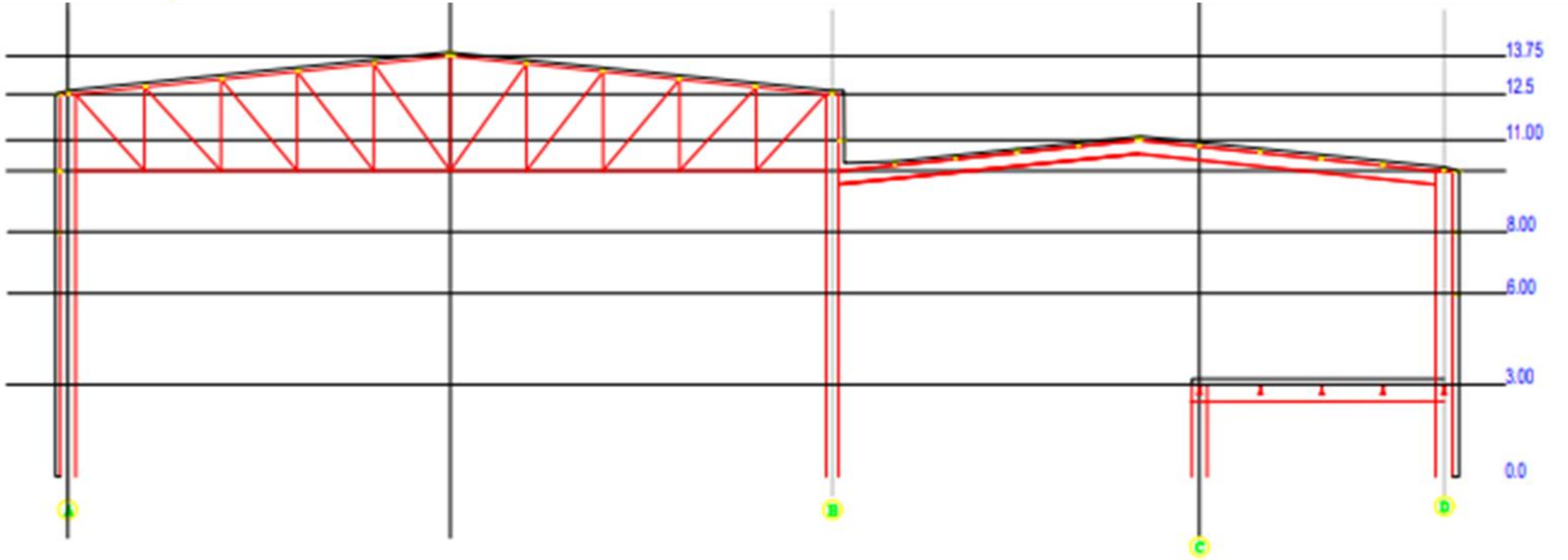

STRAINING ACTIONS

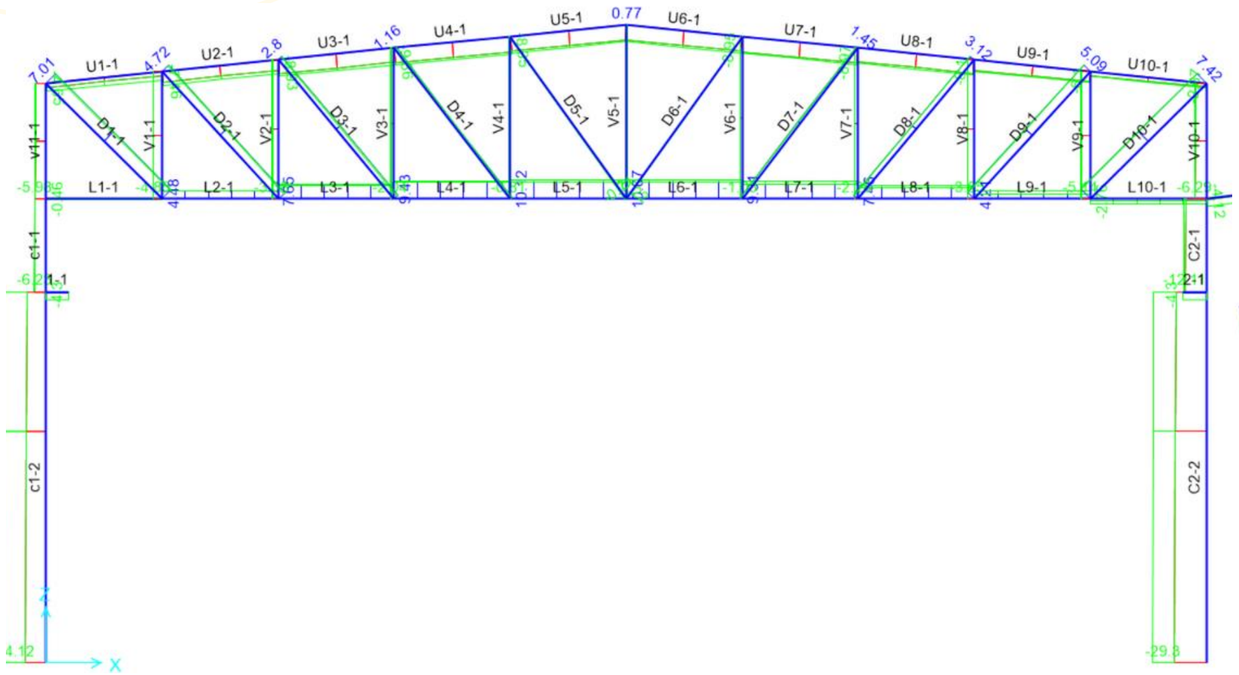

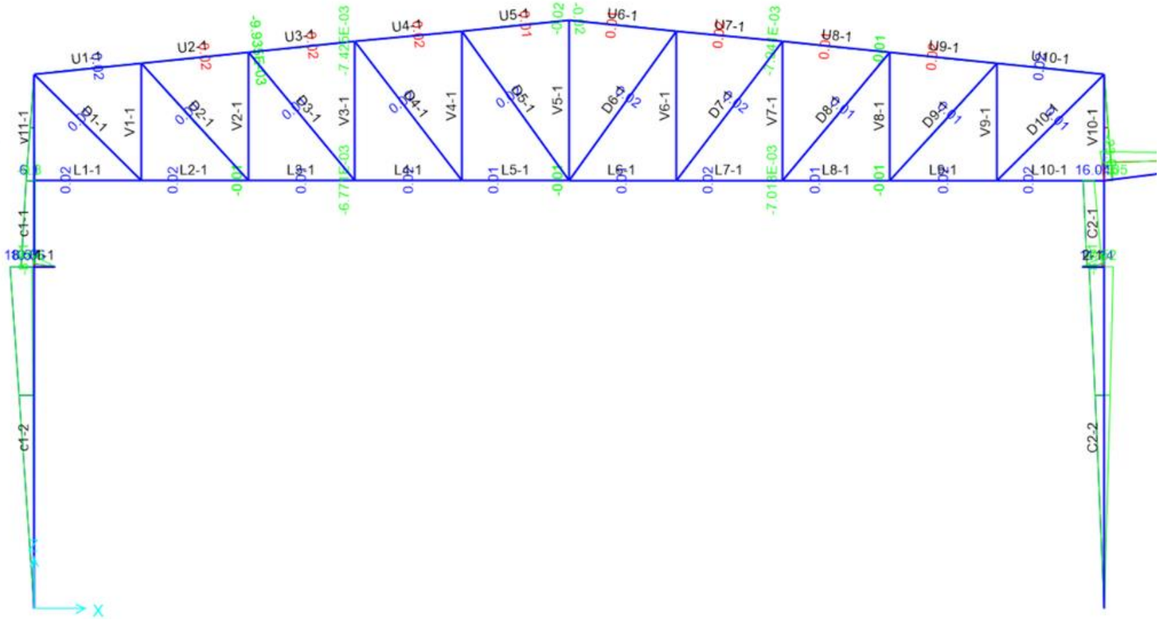

STRAINING ACTIONS

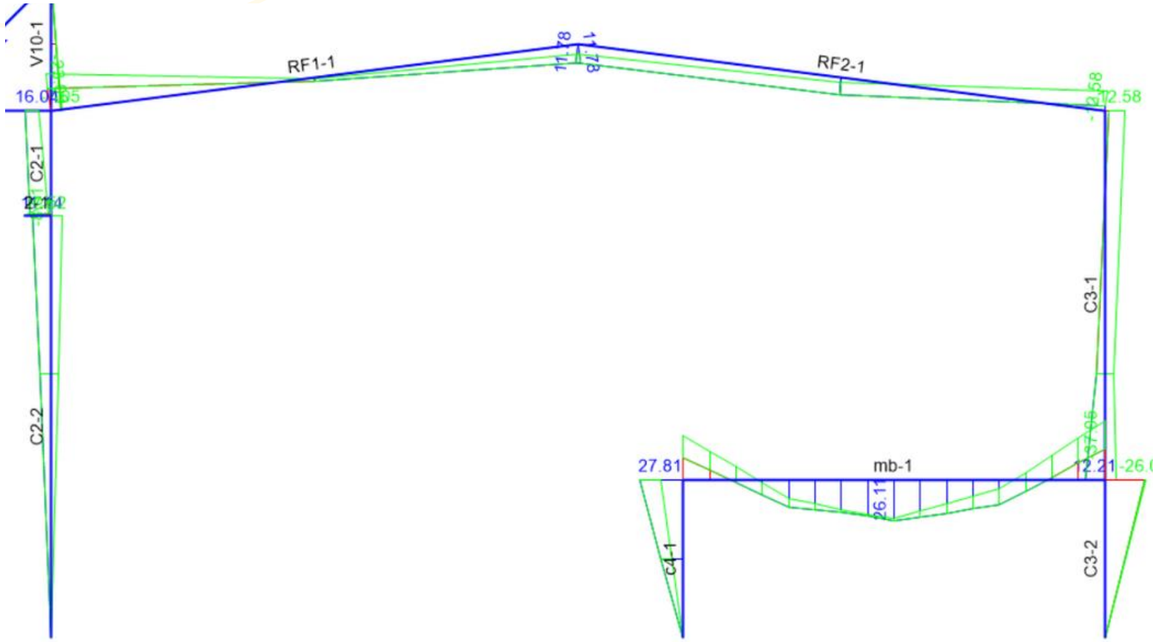

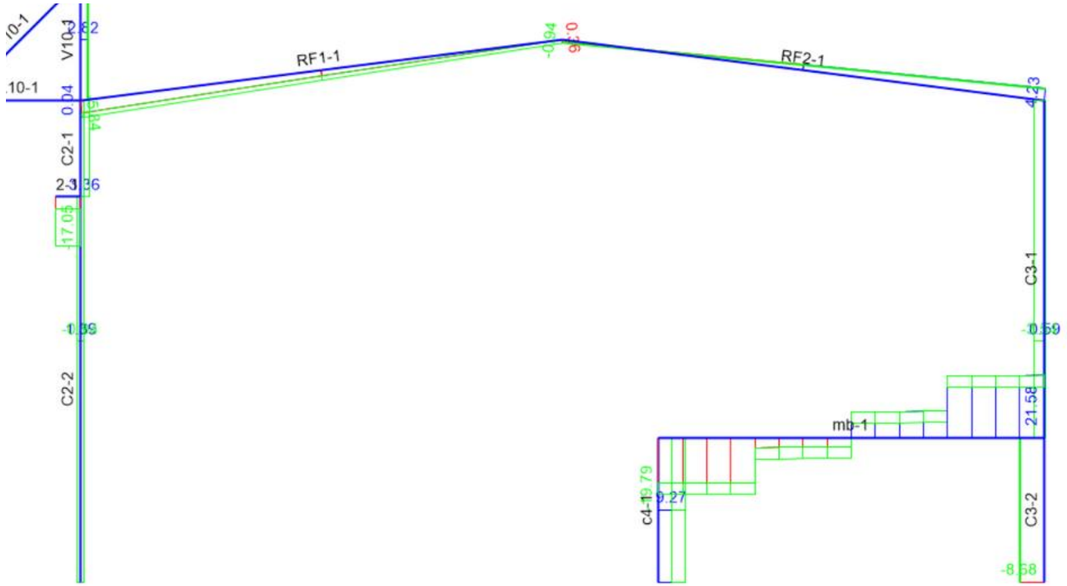

TABELS

Column	Nmax . T		Mcors t.m		Qmax		Design value			Case	Section
	d+l	d+l+w	d+l	d+l+w	d+l	d+w	Nmax	Mcor.	Qmax		
C1	-24.2	-18.5	0.1	0.1	-2.4	3.6	-24.2	0.1	-2.4	A	IPE 500
C2	-29.3	-18	0.1	0.1	3.4	3.9	-29.3	0.1	3.4	A	HEB 400
C3	-33.5	-8.8	0.1	0.1	-8.7	-6.4	-33.5	0.1	-8.7	A	HEB 550
C4	-26.3	-6.2	0.1	0.1	9.3	-7	-26.3	0.1	9.3	A	IPE 500

BEAM	M t.m		Q. t		design value		case	section
	d+l	d+l+w	d+l	d+l+w	M	Q		
rf1	0	0	-5.9	-2.5	-23.1	-5.9	A	IPE 450
rf2	0	0	4.3	3.9	-12.6	4.3	A	IPE 450
sb	7.6		6.1		7.6	6.1	A	IPE 300
mb	-37.1	-26.1	21.6	-6.2	-37.1	21.6	A	IPE 550
bracket 1	-8.6	-8.6	-17.1	-17.1	-8.6	-17.1	A	IPE 360
bracket 2	-8.6	-8.6	-17.1	-17.1	-8.6	-17.1	A	IPE 360

members	D+L	D+L+W	D.V	case	Lin	Lout	section
UPPER CORD							
U1	-4.7	-4.8	-4.7	A	2.5	2.5	2L 60*60
U2	-7.5	-3.7	-7.5	A	2.5	2.5	2L 70*70
U3	-9	-2.8	-9	A	2.5	2.5	2L 80*80
U4	-9.4	-2.5	-9.4	A	2.5	2.5	2L 80*80
U5	-9	2.4	-9	A	2.5	2.5	2L 80*80
U6	-9	2.4	-9	A	2.5	2.5	2L 80*80
U7	-9	2.5	-9	A	2.5	2.5	2L 80*80
U8	-8.1	2.6	-8.1	A	2.5	2.5	2L 80*80
U9	-6.1	1.8	-6.1	A	2.5	2.5	2L 70*70
U10	-2.7	0.2	-2.7	A	2.5	2.5	2L 60*60
LOWER CORD							
L1	-3.3	4.4	4.4	B	2.5	7.5	2L60*60
L2	4.5	3.2	4.5	A	2.5	7.5	2L 60*60
L3	7.7	2.6	7.7	A	2.5	7.5	2L 70*70
L4	9.5	2.2	9.5	A	2.5	5	2L80*80
L5	10.2	1.8	10.2	A	2.5	5	2L90*90
L6	10.2	1.6	10.2	A	2.5	5	2L 90*90
L7	9.4	1.4	9.4	A	2.5	5	2L 80*80
L8	7.5	2	7.5	A	2.5	7.5	2L 70*70
L9	4.3	3.7	4.3	A	2.5	7.5	2L 60*60
L10	-4.5	2.8	-4.5	a	2.5	7.5	2L 60*60
VERTICAL							
V1	-4.9	1.4	-4.9	A	2.5	2.5	1L100*100
V2	-3.5	1.3	-3.5	A	2.5	2.5	1L100*100
V3	-2	1.1	-2	A	2.5	2.5	1L 80*80
V4	-0.8	1	1	B	2.5	2.5	1L60*60
V5	0.8	0.5	0.8	A	2.5	2.5	1L 60*60
V6	-1	-0.7	-1	A	2.5	2.5	1L 80*80
V7	-2.3	0.9	-2.3	A	2.5	2.5	1L 90*90
V8	-3.7	2	-3.7	A	2.5	2.5	1L100*100
V9	-5.2	2.3	-5.2	A	2.5	2.5	1L100*100
DIAGONAL							
D1	7.1	-1.8	7.1	A	2.5	2.5	1L 80*80
D2	4.7	-1.5	4.7	A	2.5	2.5	1L70*70
D3	2.8	-1.2	2.8	A	2.5	2.5	1L60*60
D4	1.2	0.8	1.2	A	2.5	2.5	1L60*60
D5	-0.7	-0.8	-0.7	A	2.5	2.5	1L 80*80
D6	-0.2	-0.7	-0.7	B	2.5	2.5	1L80*80
D7	1.5	1.1	1.5	A	2.5	2.5	1L 60*60
D8	3.2	-1	3.2	A	2.5	2.5	1L 70*70
D9	5.1	-2.5	5.1	A	2.5	2.5	1L70*70
D10	7.5	-3	7.5	A	2.5	2.5	1L80*80

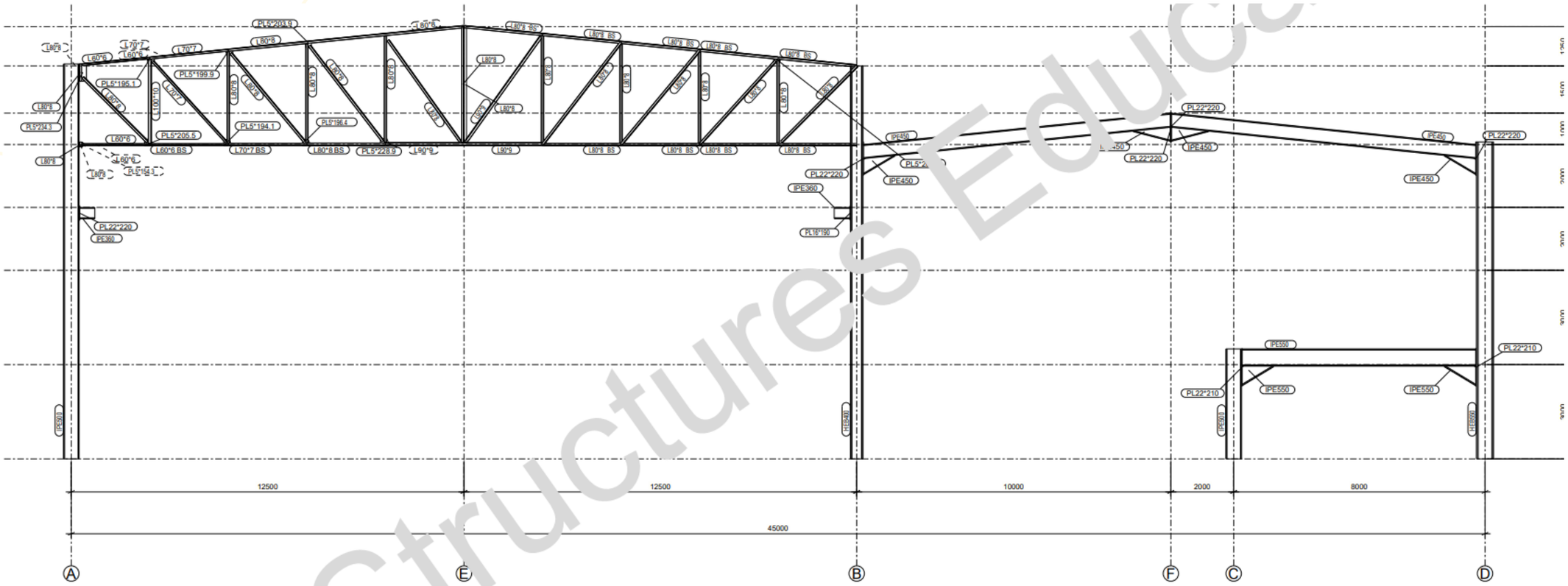

Grid 3

Structures Educ

Pharos University in Alexandria
Faculty of Engineering
Department of Construcion and Mangment

CONCEPTUAL 3D MODELS

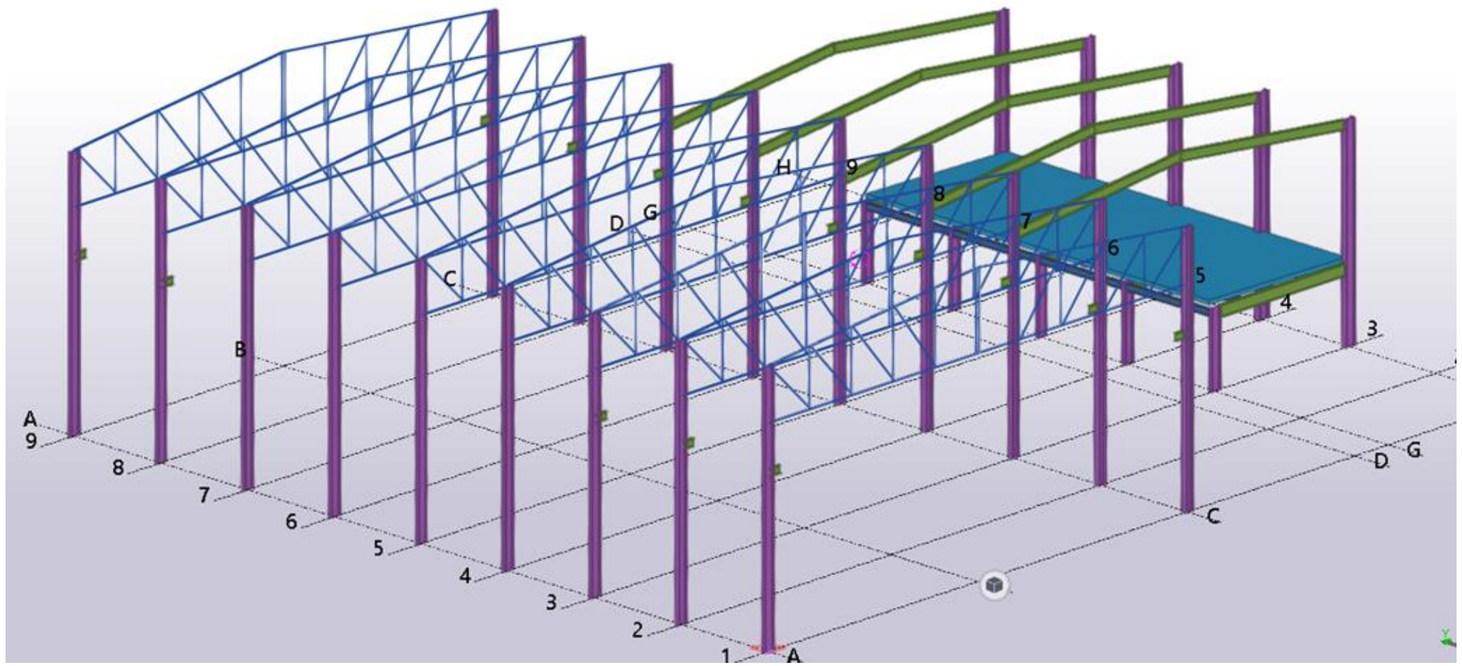

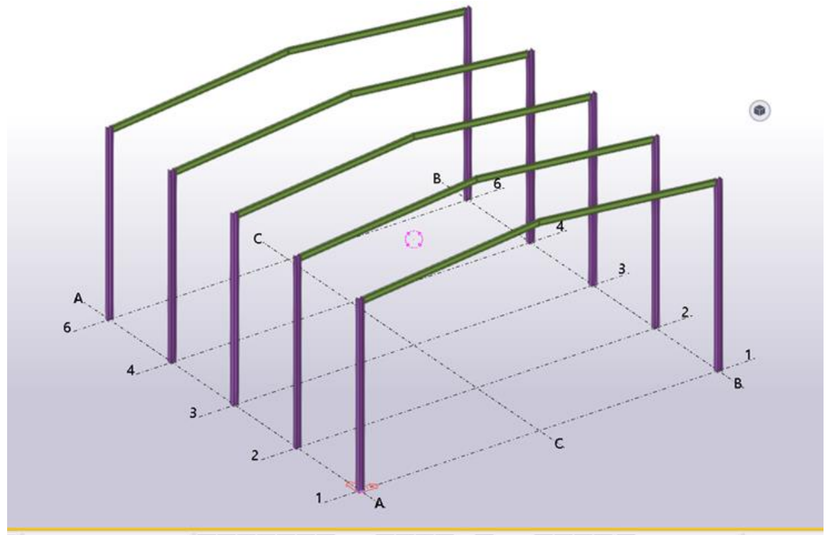

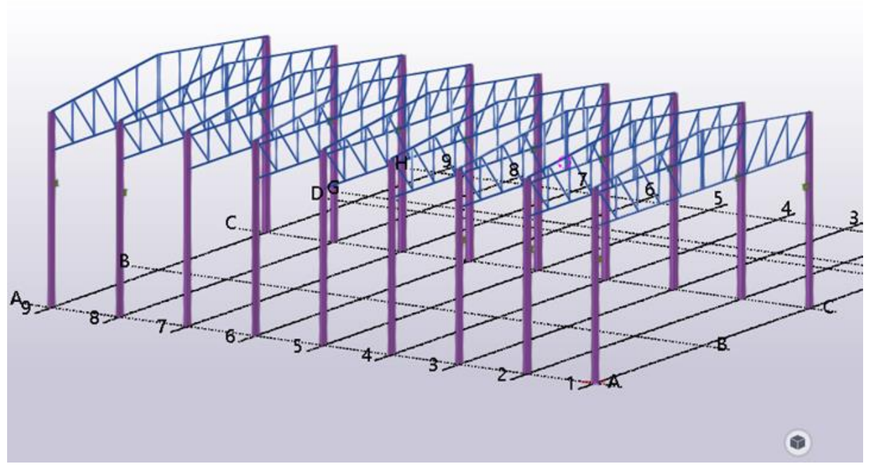

Pharos University in Alexandria
Faculty of Engineering
Department of Construcion and Mangment

CONNECTIONS

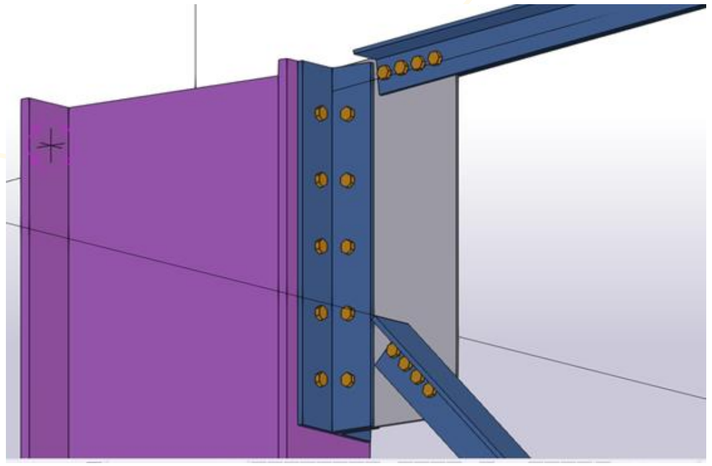

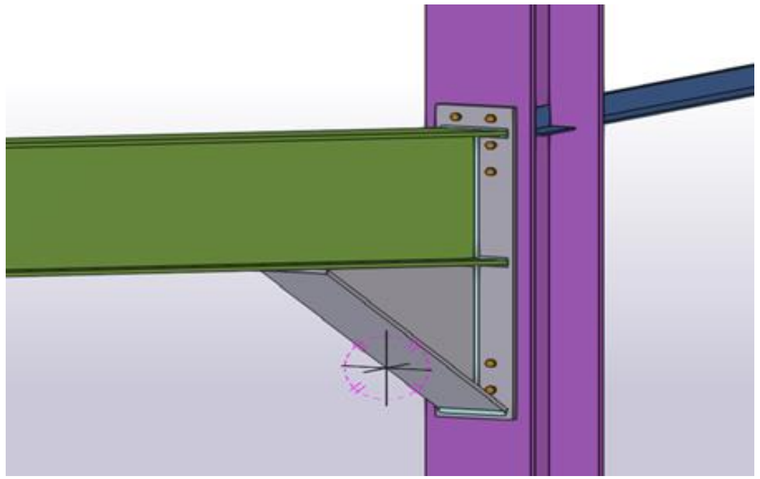

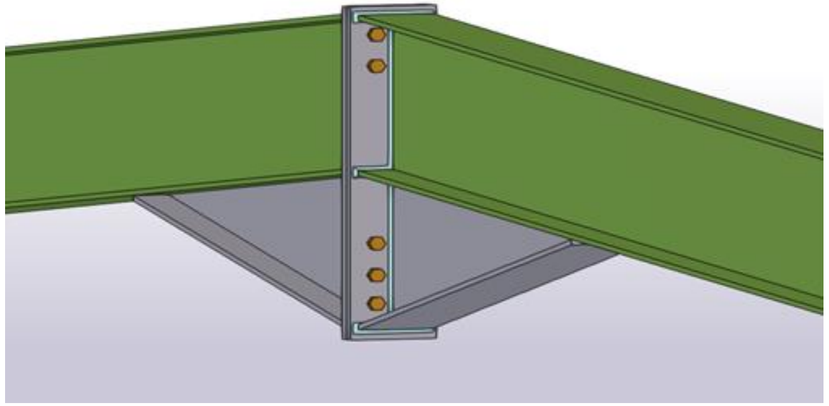

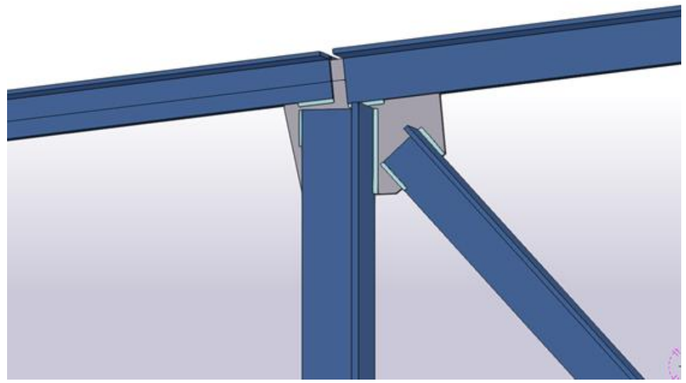

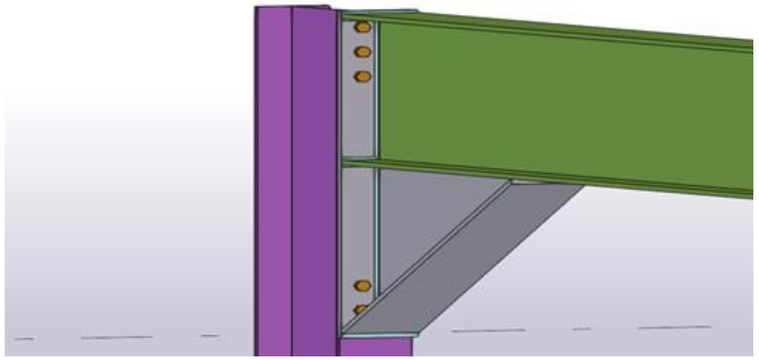

Pharos University in Alexandria
Faculty of Engineering
Department of Construcion and Mangment

SHOP DRAWINGS

Truss end part

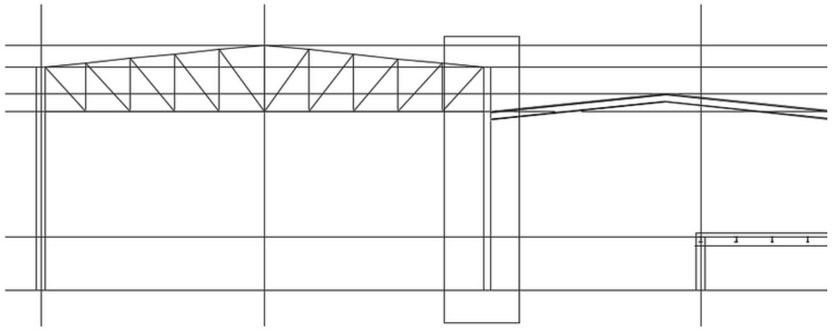

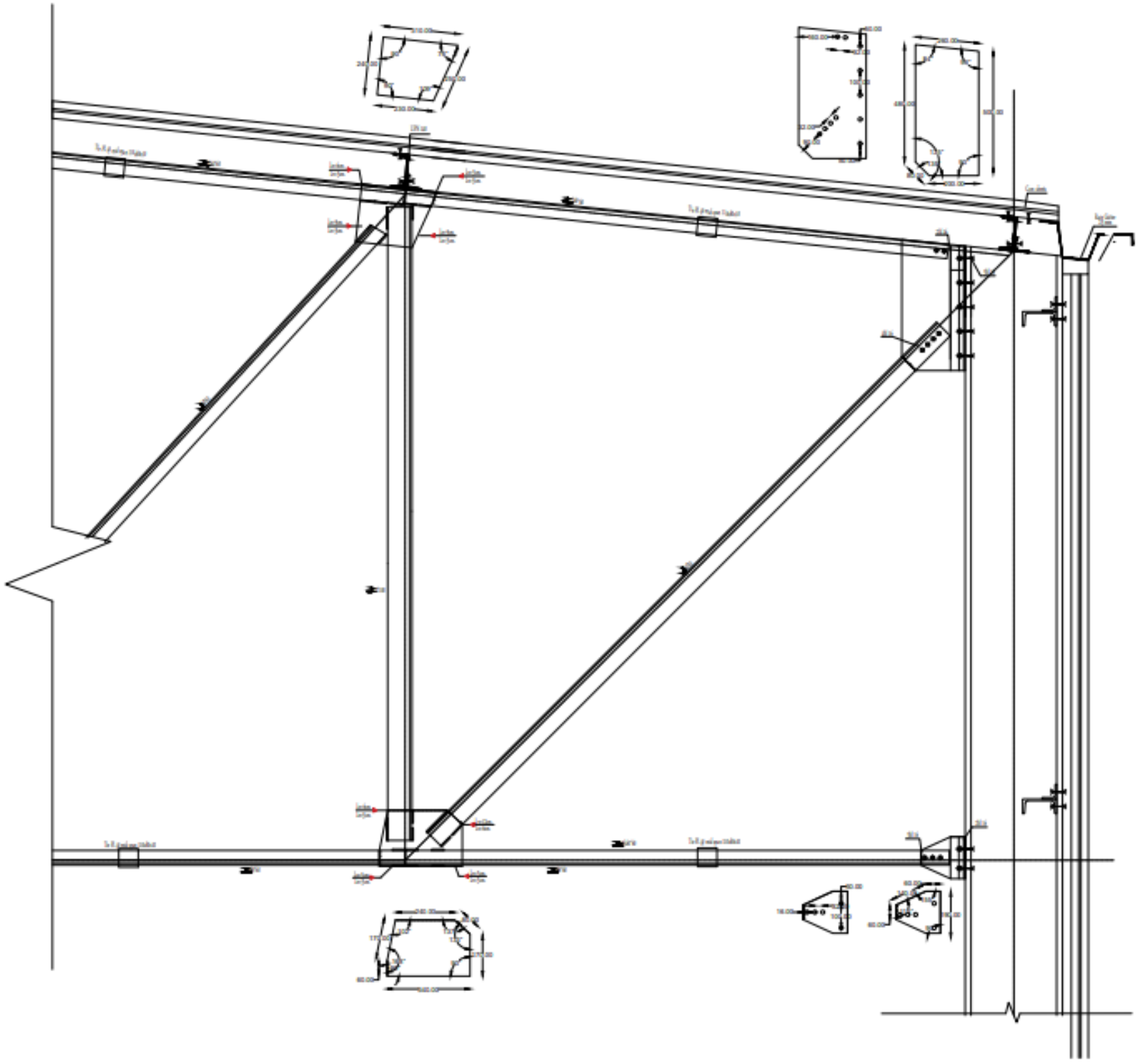

Pharos University in Alexandria
Faculty of Engineering
Department of Construcion and Mangment

Truss middle part

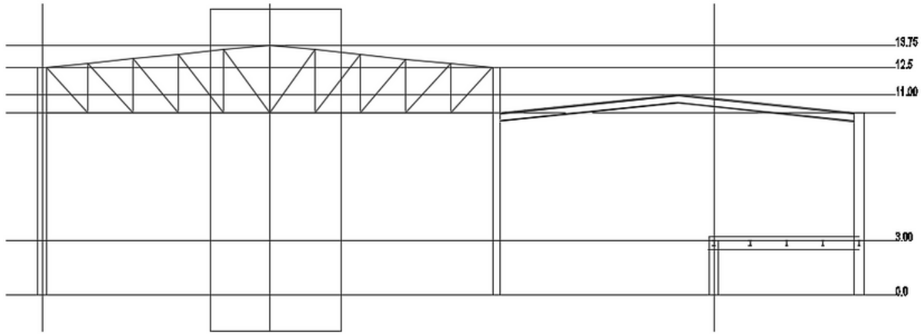

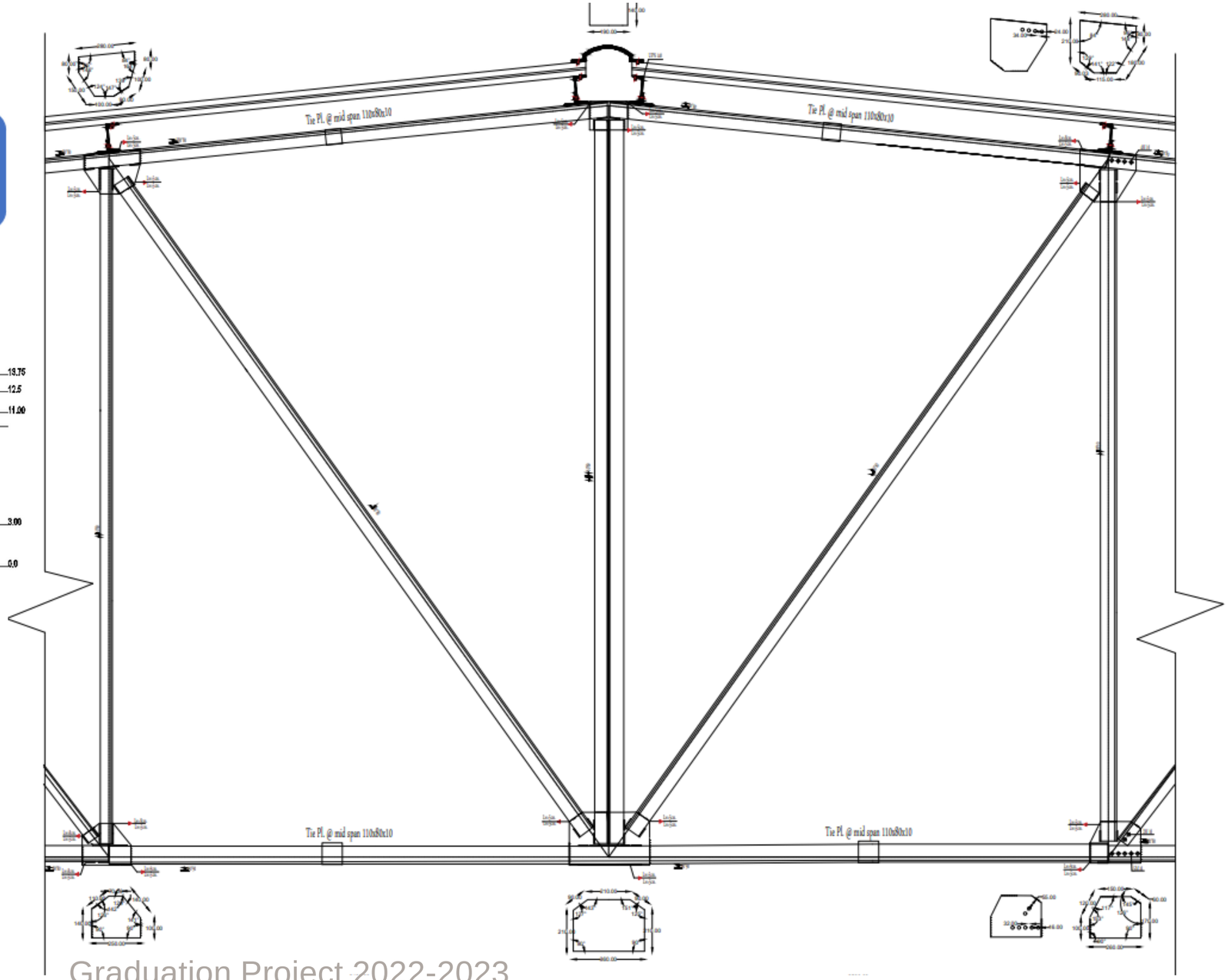

Pharos University in Alexandria
Faculty of Engineering
Department of Construcion and Mangment

C1 with truss part

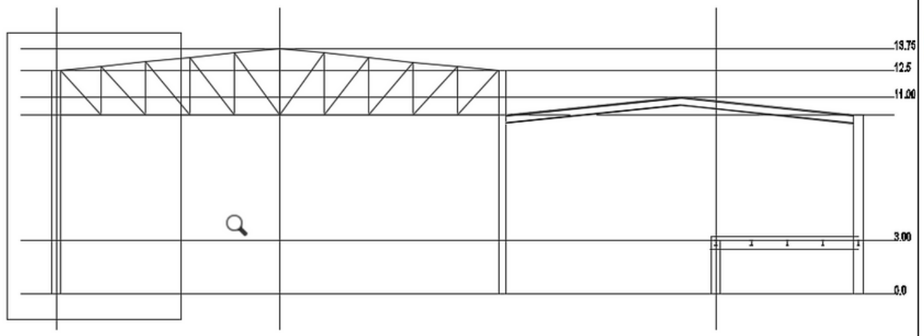

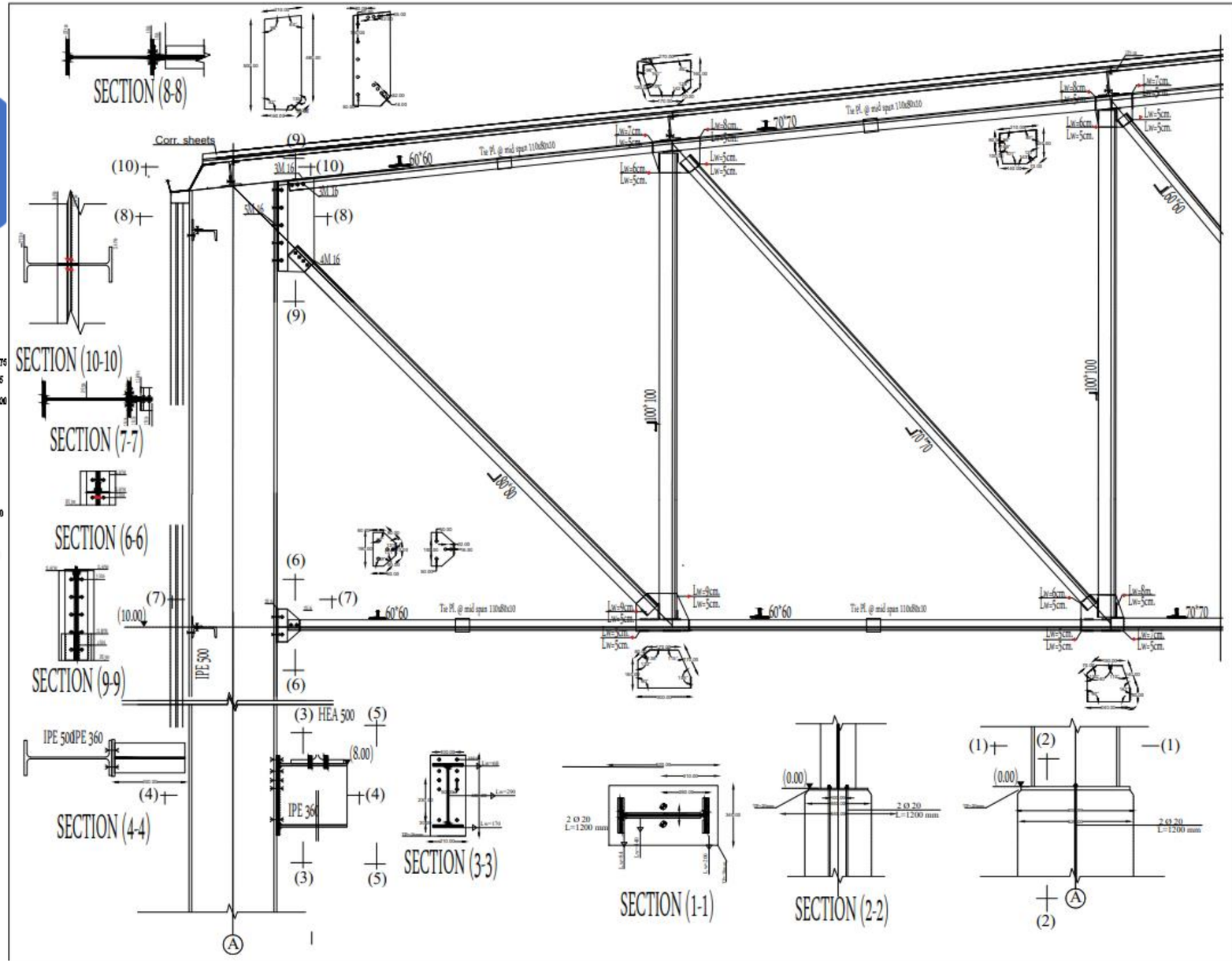

Pharos University in Alexandria
Faculty of Engineering
Department of Construcion and Mangment

Coulmn c2

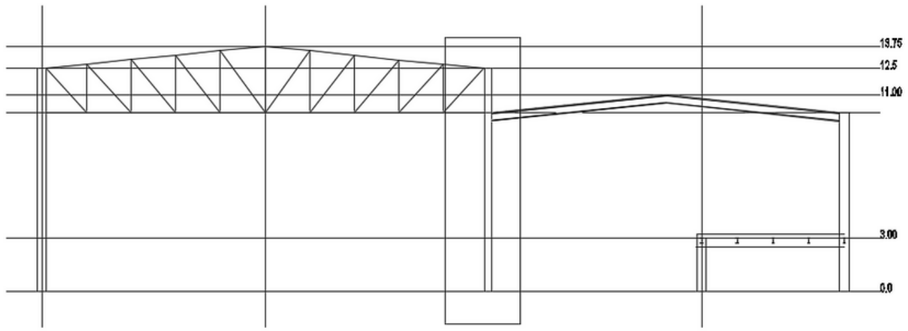

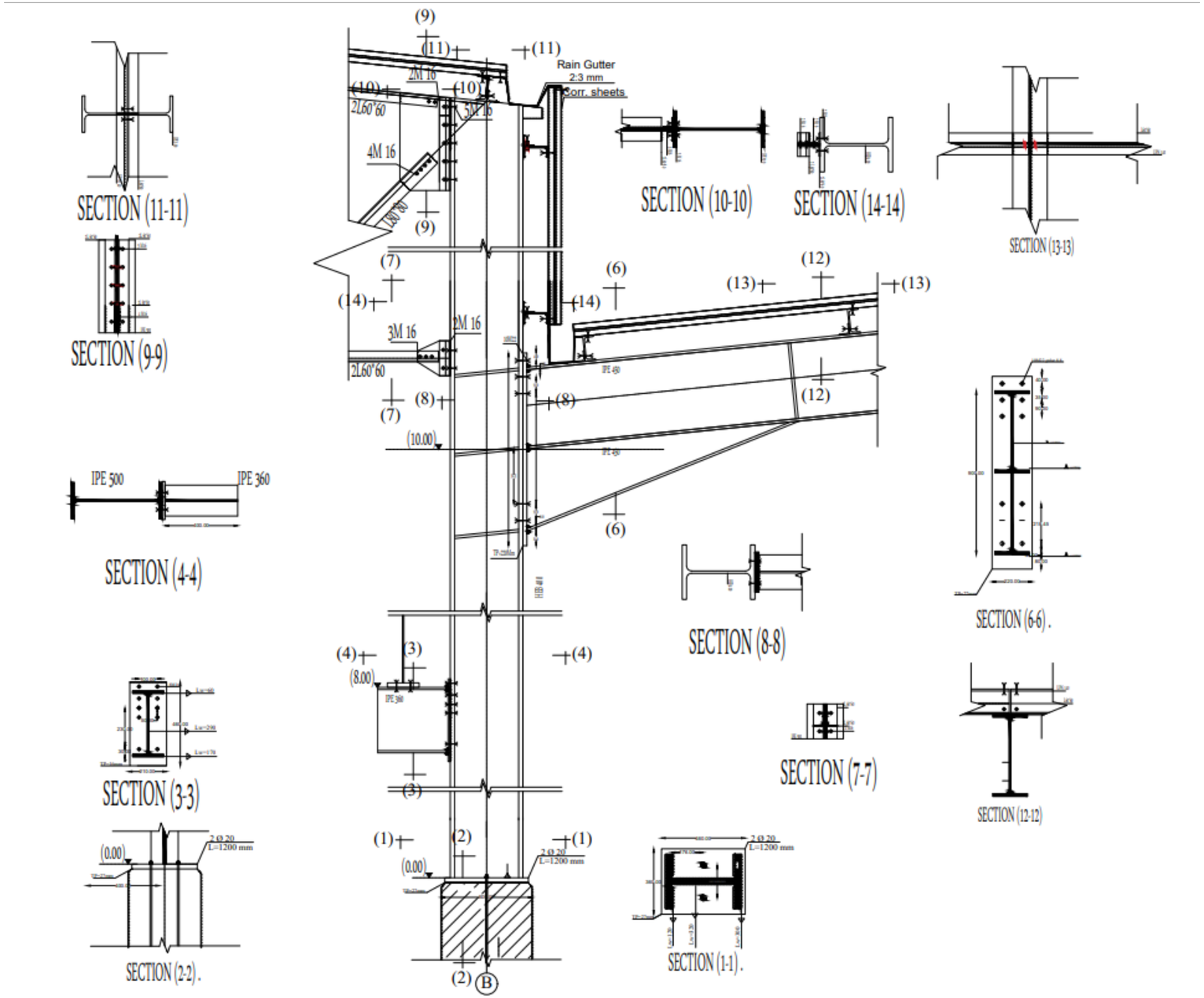

Pharos University in Alexandria
Faculty of Engineering
Department of Construcion and Mangment

Column c3

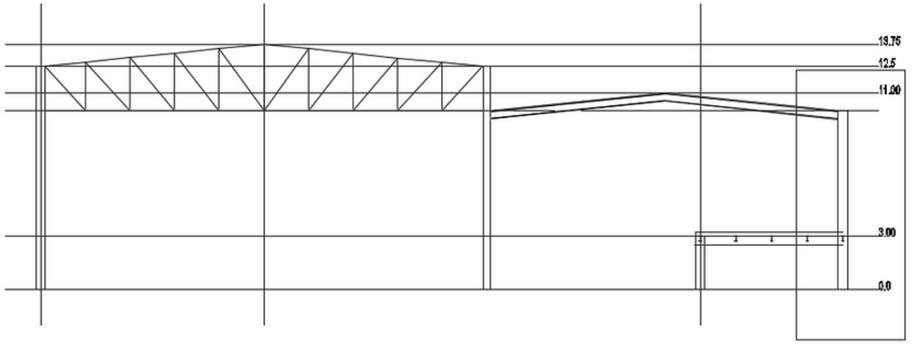

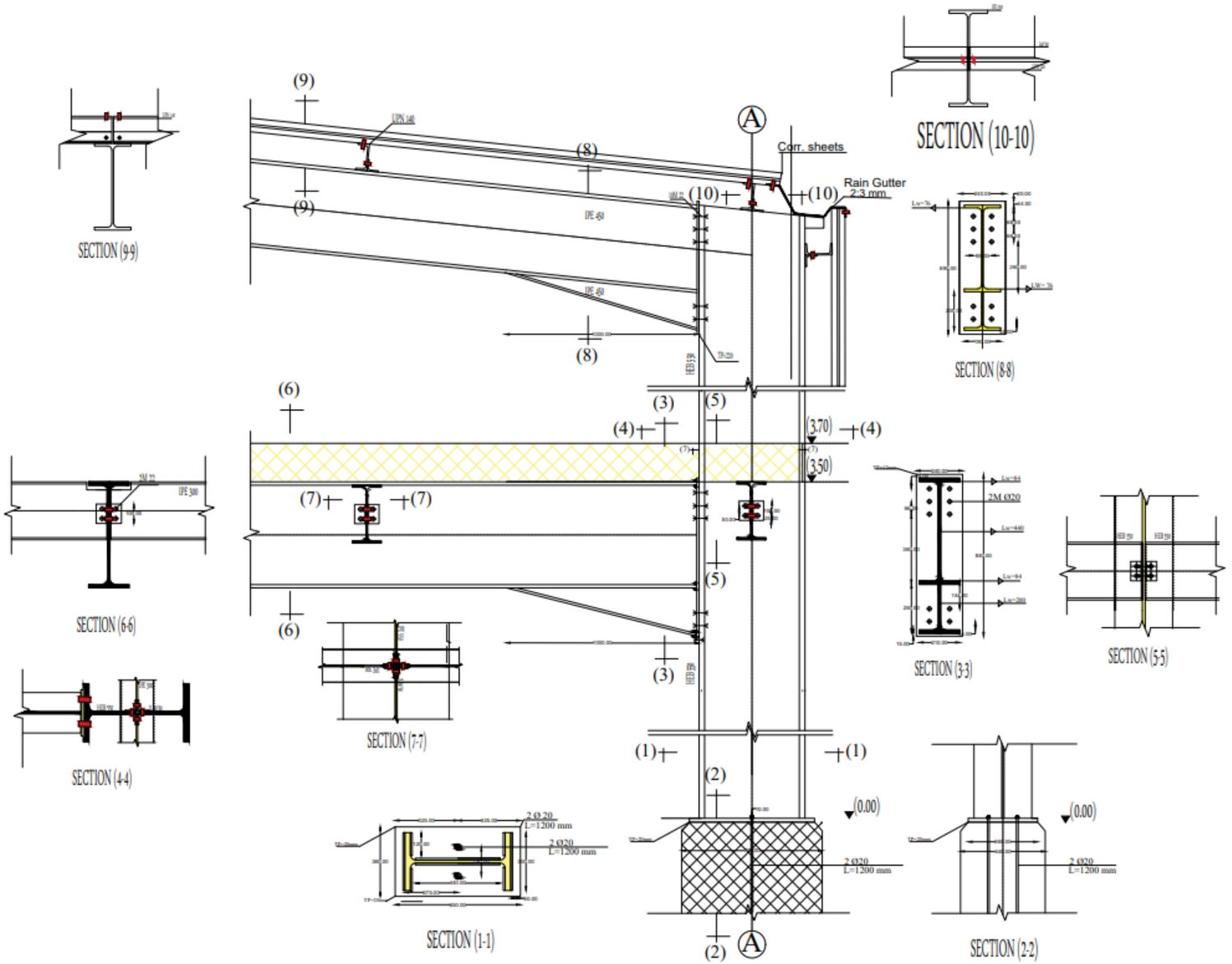

Pharos University in Alexandria
Faculty of Engineering
Department of Construcion and Mangment

Column c4 with Apex

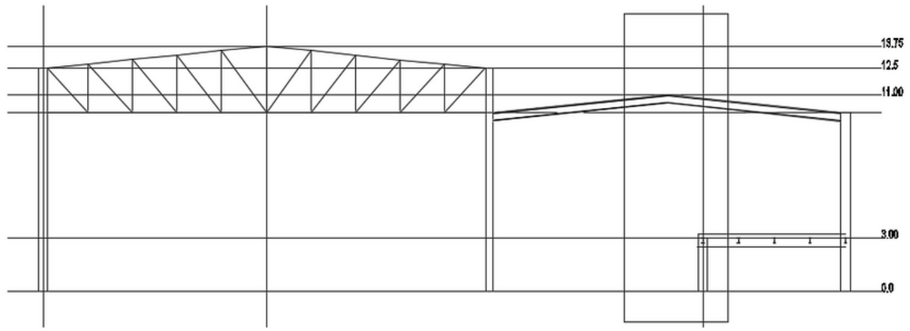

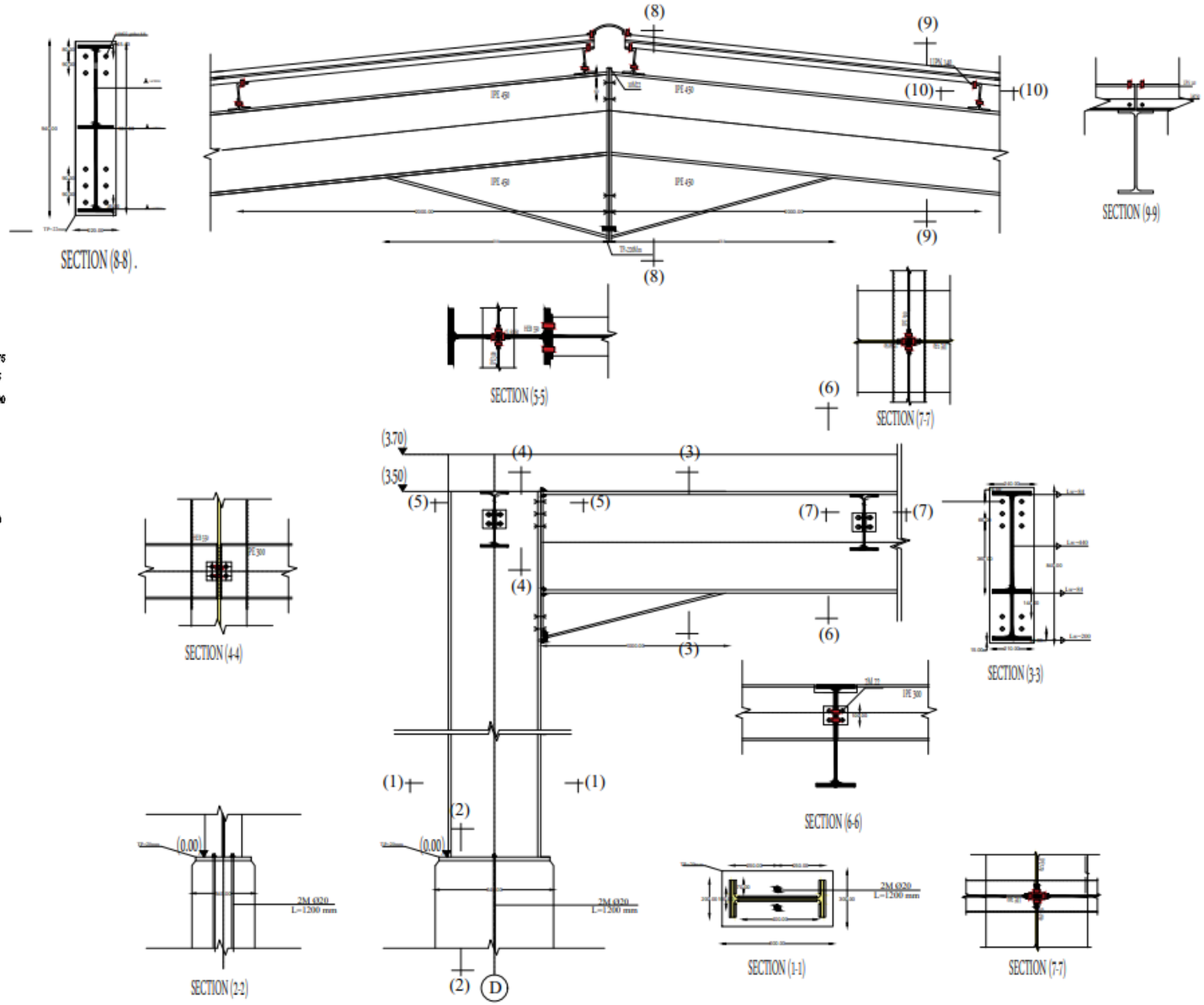

Pharos University in Alexandria
Faculty of Engineering
Department of Construcion and Mangment

Vertical Bracing

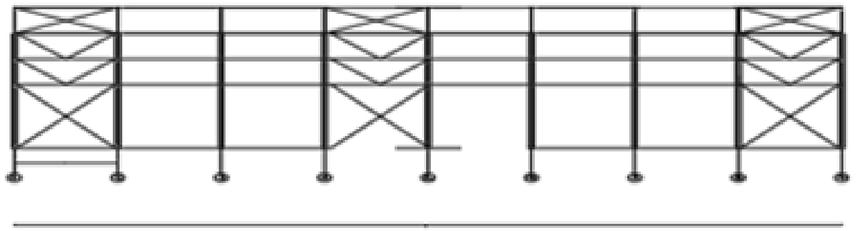

SIDE VIEW SECTION A-A

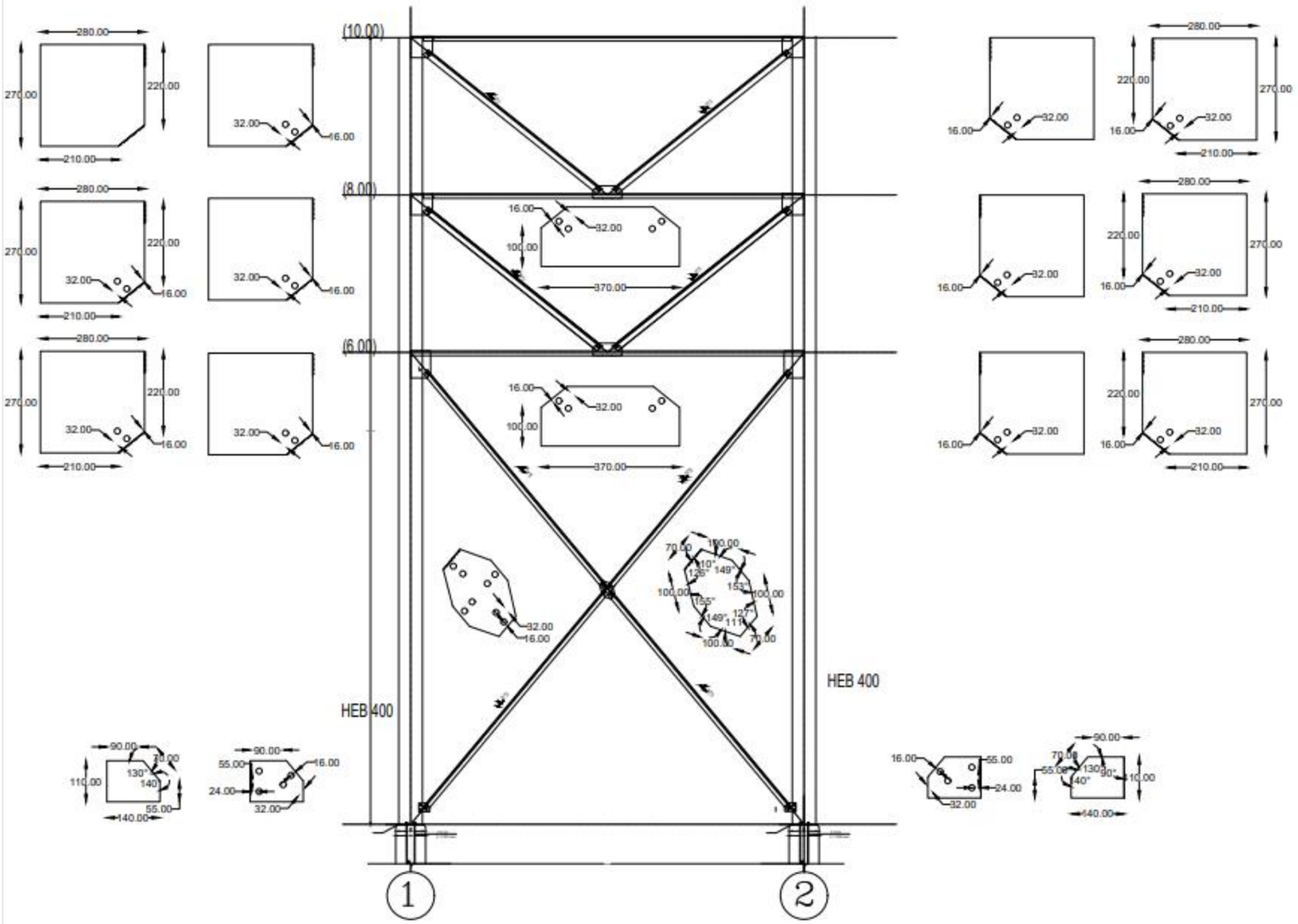

WORKING ON

- quantities estimates
- schedule and planning
- cost estimates
- Quality , safety and risk mangment
- Contract adminstration

USED PROGRAMS

Tekla®
A Trimble Solution

SAP2000

REFERENCES

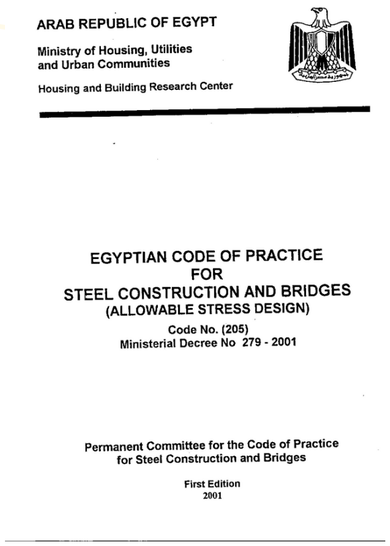
ARAB REPUBLIC OF EGYPT
Ministry of Housing, Utilities and Urban Communities
Housing and Building Research Center

EGYPTIAN CODE OF PRACTICE
FOR
STEEL CONSTRUCTION AND BRIDGES
(ALLOWABLE STRESS DESIGN)
Code No. (205)
Ministerial Decree No 279 - 2001

Permanent Committee for the Code of Practice for Steel Construction and Bridges
First Edition
2001

ministerial decree (2001). Egyptian Code of practice for steel construction and bridges(Code no. 205)

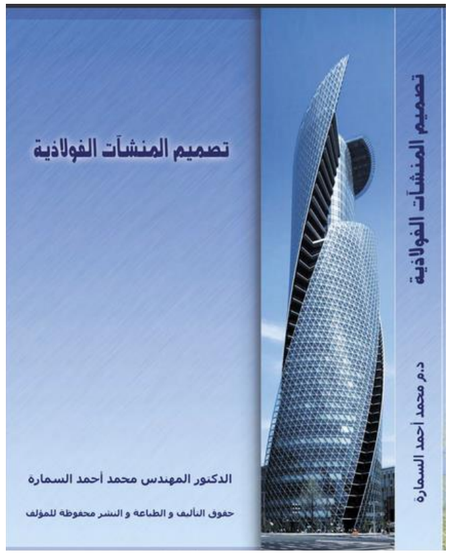

تصميم المنشأت الفولاذية .(2016).دكتور محمد أحمد السمارة.

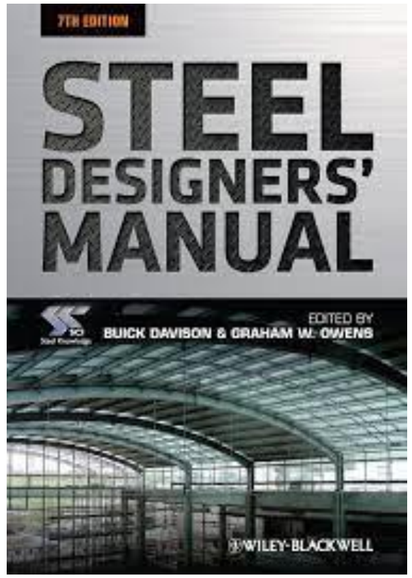

• Graham Wynford Owens, Buick Davison. (1992). Steel Designers' Manual

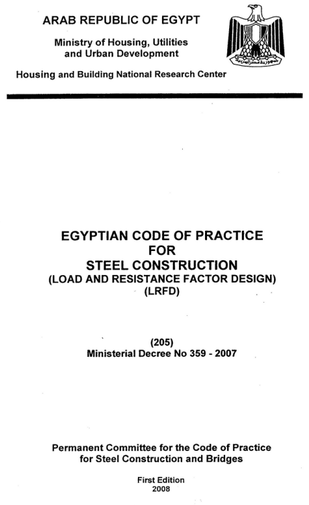
ARAB REPUBLIC OF EGYPT
Ministry of Housing, Utilities and Urban Development
Housing and Building National Research Center

EGYPTIAN CODE OF PRACTICE
FOR
STEEL CONSTRUCTION
(LOAD AND RESISTANCE FACTOR DESIGN)
(LRFD)

(205)
Ministerial Decree No 359 - 2007

Permanent Committee for the Code of Practice for Steel Construction and Bridges
First Edition
2008

ministerial decree (2007). Egyptian Code of practice for steel construction Load and Resistance Factor Design (Code no. 205)