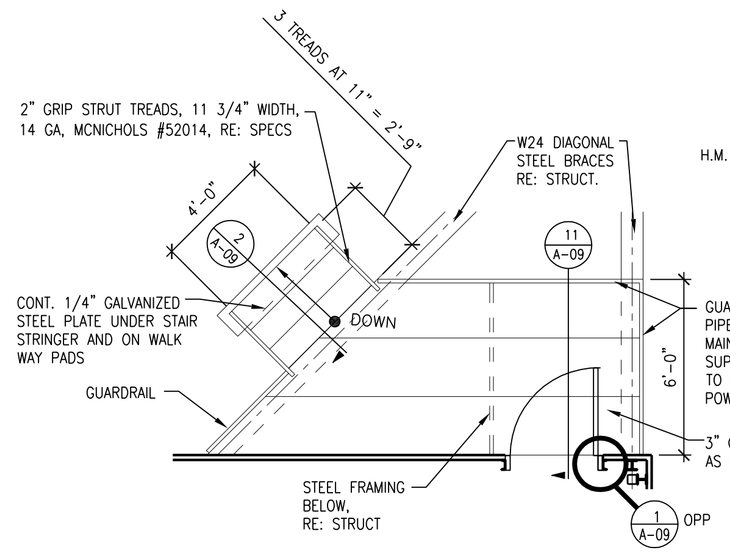

10 STAIR PLAN - DECK
SCALE: 1/4" = 1'-0"

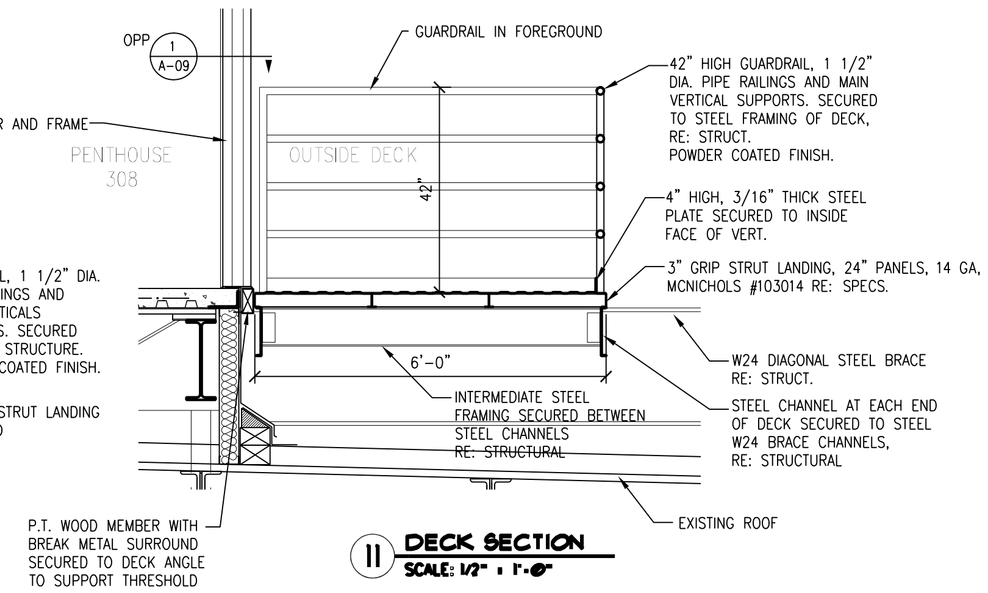

11 DECK SECTION
SCALE: 1/2" = 1'-0"

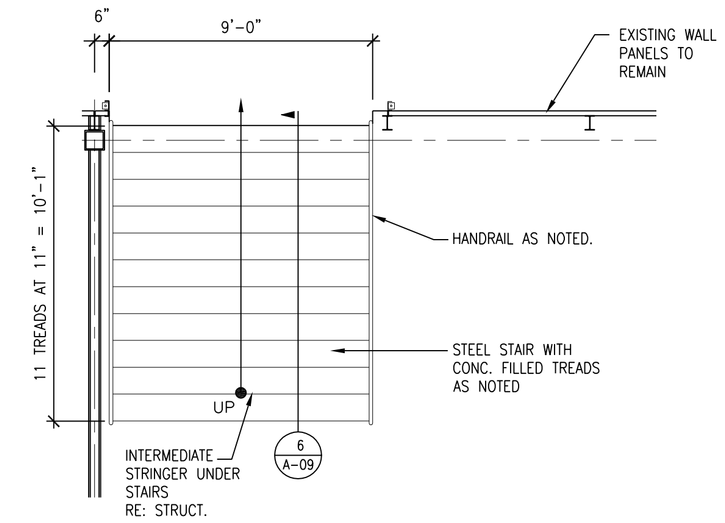

4 STAIR PLAN - LOFT TO PENTHOUSE
SCALE: 1/4" = 1'-0"

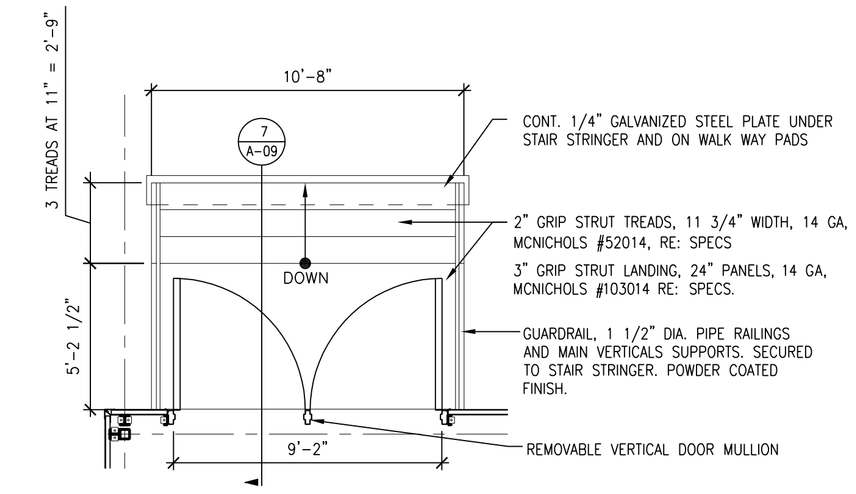

5 STAIR PLAN - PENTHOUSE TO ROOF
SCALE: 1/4" = 1'-0"

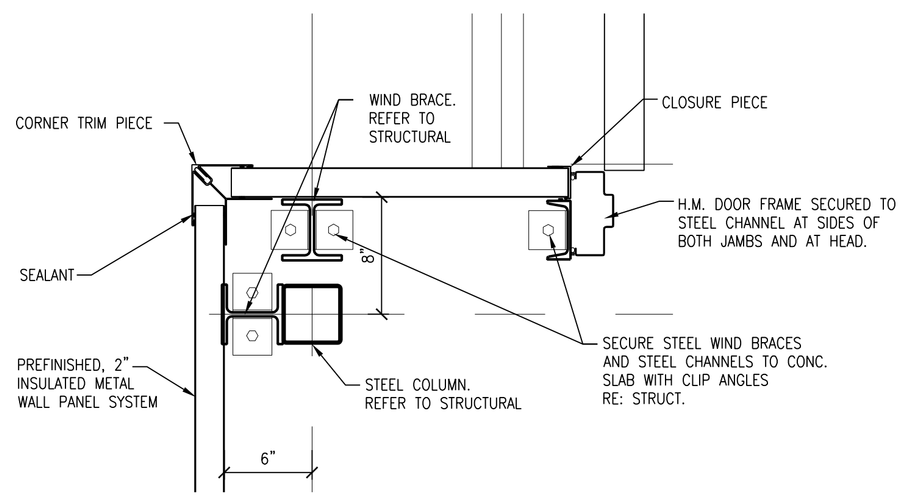

1 PLAN DETAIL
SCALE: 1 1/2" = 1'-0"

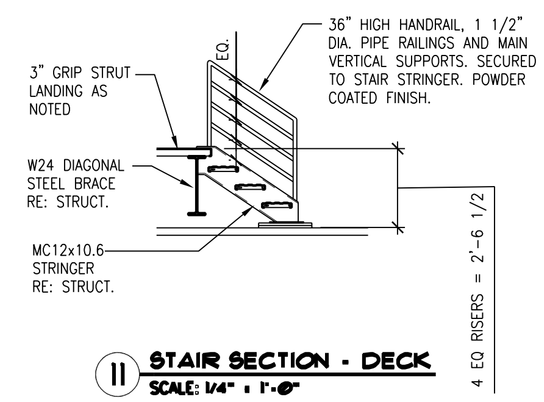

11 STAIR SECTION - DECK
SCALE: 1/4" = 1'-0"

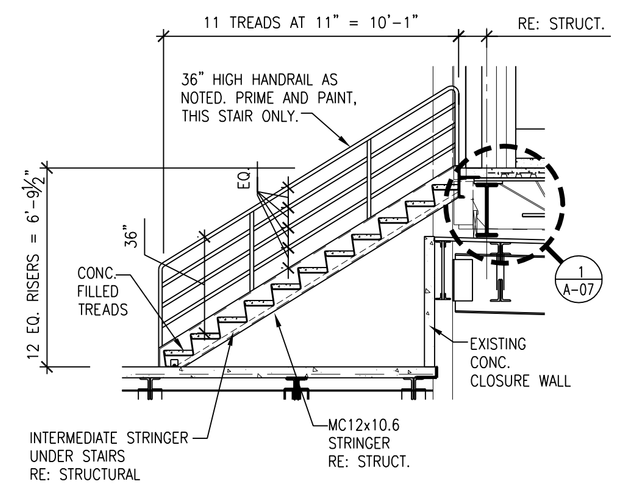

6 STAIR SECTION - LOFT TO PENTHOUSE
SCALE: 1/4" = 1'-0"

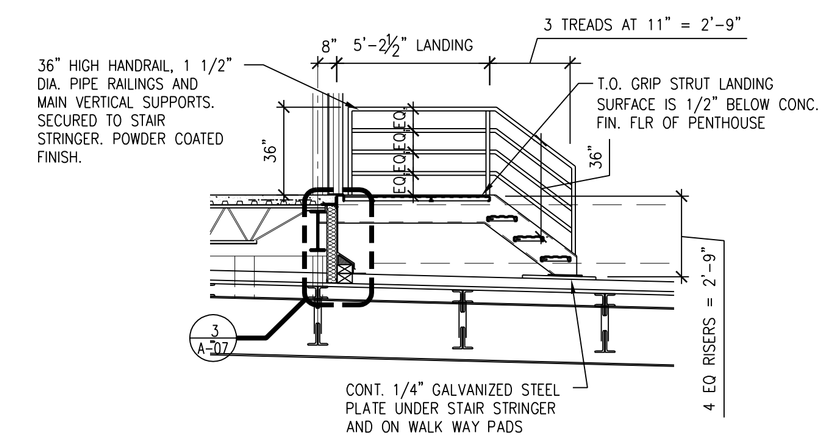

7 STAIR SECTION - PENTHOUSE TO ROOF
SCALE: 1/4" = 1'-0"

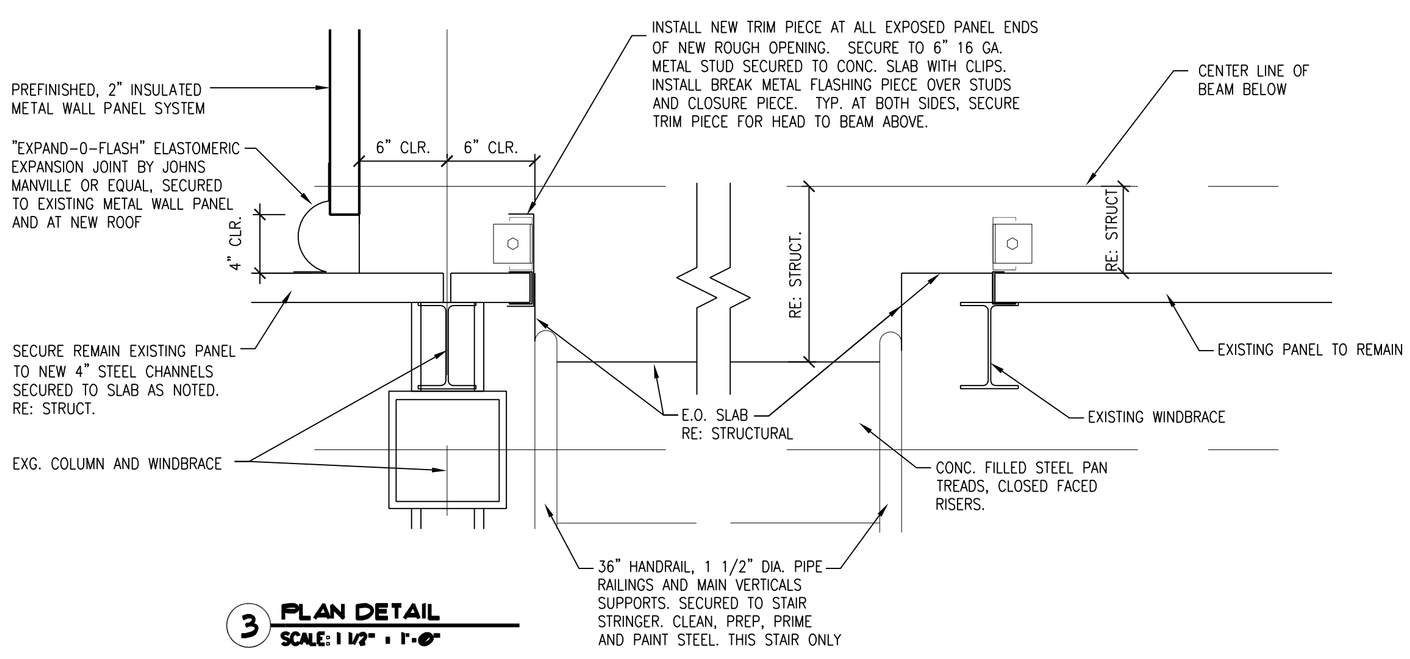

3 PLAN DETAIL
SCALE: 1 1/2" = 1'-0"

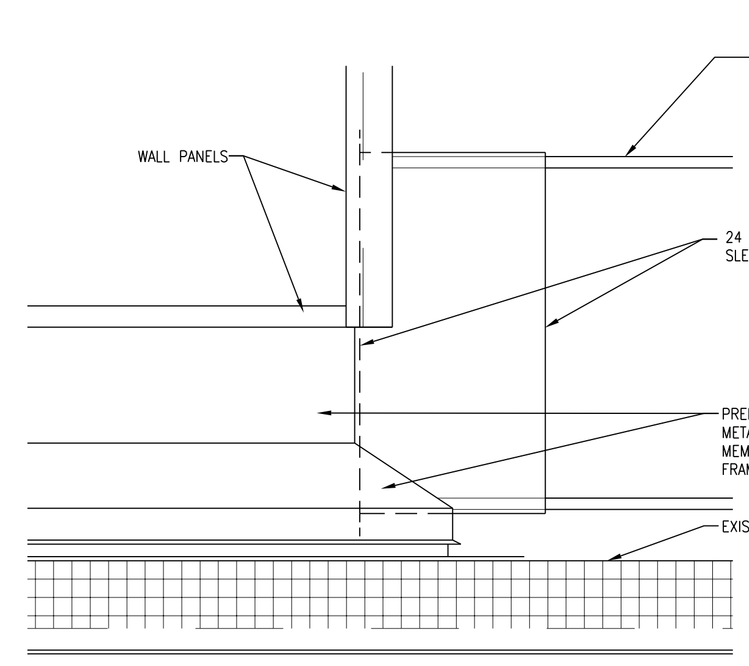

8 FLASHING DETAIL - PENTHOUSE TO EXISTING ROOF
SCALE: 1 1/2" = 1'-0"

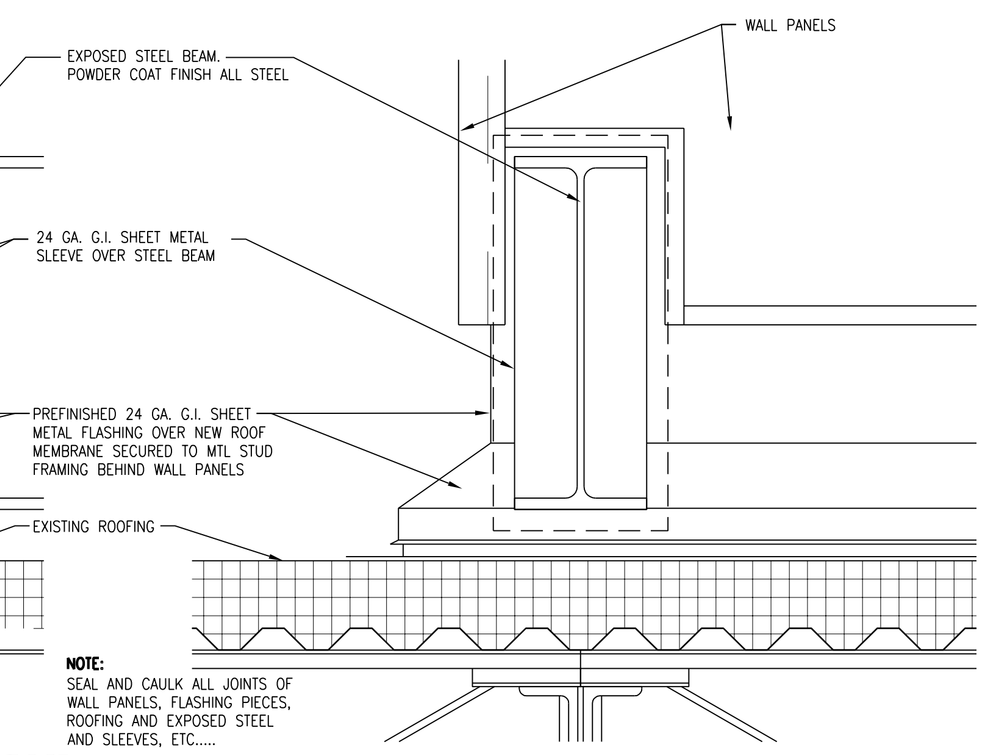

9 FLASHING DETAIL - PENTHOUSE TO EXISTING ROOF
SCALE: 1 1/2" = 1'-0"

NO.	REVISIONS	DATE	BY	APP'D.	BAE	NO.	REVISIONS	DATE	BY	APP'D.	BAE
0	50% CONSTRUCTION DOCUMENTS	08-12-11	MR								
1	90% CONSTRUCTION DOCUMENTS	09-29-11	MR								
2	100% CONSTRUCTION DOCUMENTS	11-3-11	MR								
3	FOR CONSTRUCTION	01-20-12	MR								

FILE INFORMATION			
USER:	DATE:	TIME:	XREF'S:
DWG. FILE:		LAYOUT:	
DWG. FOLDER:			
ACAD VERSION: 2008			
PLATFORM:			
BORDER: ZBD2234D-3.DWG	PLOT SCALE: 1:1		UNITS: INCHES/FEET
PLOT INFO.: nrel.stb			

ENGINEERING REVIEW	APPROVAL	DATE
DESIGNER		
ENGINEER		
CHECKED BY		
A/E APPROVED BY		
NREL APPROVED BY		
BLDG. AREA ENG.		

CG Construction
Building Structural Integrity

NREL
National Renewable Energy Laboratory
1617 Cole Boulevard
Golden, Colorado 80401-3393
Operated for the
U.S. Department of Energy
by Midwest Research Institute • Battelle • Bechtel

FTLB ARCH
THERMO-CHEM LABORATORY 101 CONVERSION
TASK ORDER 13
STAIR PLAN AND MISC. DETAILS

DRAWING NO. PREFIX	DRAWING NO.	REVISION NO.
FTLB-135-	A-09	0
NREL PROJECT NO.	NREL WORK ORDER NO.	A/E PROJECT NO.
EX2010034	13	

F:\NREL\FTLB-2011\Cds\100% Revisions - 01-20-12\FTLB-135-A-09.dwg LAST PLOTTED ON 01/24/2012 - 16:52 BY JUAN PASILLAS