جامعة الفيوم
Fayoum University

Faculty of Engineering
Fayoum University

# Automated Bottle Filling, Capping, and Labeling Machine Using PLC

## Supervisor

## Associated Prof. Ahmed M. El-Sayed

## Student Names


1. طارق محمد احمد
2. عبد الله محمد حسن
3. احمد شعبان عويس
4. مؤمن يحيى محمود
5. عبد الرحمن على منصور ابوسريع
6. احمد محمد محمد عبد الحليم سعفان
7. اياد محمد عثمان هنداوى
8. حسن ممدوح حسن


**Supervisor Signature:** _____ **Date:** _____

# 1. Project Abstract

This project aims to design and implement a fully automated production line for small-scale bottling industries. The system integrates three main stages: **Filling, Capping, and Labeling**, linked by a conveyor belt and rotary tables. Controlled by a **PLC**, the machine utilizes sensors and pneumatic/electric actuators to minimize human intervention, ensure high hygiene standards, and increase production efficiency. The prototype addresses the needs of SMEs by providing a compact, cost-effective automation solution.

---

# 2. Achievements during Term 1

During the first term, the team successfully completed the following phases:

1. **Literature Review & Market Survey:** Analyzed existing filling machines and identified the required specifications for the prototype.
2. **System Design & Requirement Analysis:** Defined the sequence of operation (Flowchart) and selected the control methodology (PLC-based).
3. **Component Selection:** Finalized the selection of the PLC model, sensors (Photoelectric & Proximity), actuators (Stepper motors for labeling, DC motors for conveyor), and pneumatic components.
4. **Control Logic Design:** Developed the **System Block Diagram** and **Operational Flowchart** (included in Chapter 1).
5. **Documentation:** Completed "Chapter 1: Introduction" covering project objectives, methodology, and system overview.

---

# Chapter One: Introduction and Project Overview

## 1.1 Introduction

Automation has become an essential pillar of modern industrial development. As industries evolve toward higher production rates, improved quality standards, and reduced human error, automated systems become critical components of efficient manufacturing.

One of the core operations across various production sectors—including food, chemical, pharmaceutical, cosmetic, and beverage manufacturing—is the filling and capping of containers.

Traditionally, these processes were performed manually, resulting in high variability, increased production time, and potential contamination.

With the emergence of Programmable Logic Controllers (PLCs), Filling, Capping and Labeling processes have become faster, more reliable, and highly precise. PLC-based automated machines provide real-time control, faster cycle rates, built-in safety mechanisms, and flexibility for system expansion.

This project focuses on the development of an Automatic Filling and Capping Machine that uses PLC technology to perform fully automated operations with minimal human intervention.

The system is designed to sense bottle presence, fill the required amount of liquid, cap the bottle accurately, and deliver the final product. The integration of mechanical, electrical, and control components allows the system to demonstrate how automation enhances industrial operational efficiency.

## 1.2 Project Definition

The Automatic Filling, Capping and Labeling Machine Using PLC is an integrated electromechanical system capable of performing all essential stages of bottle handling. The system includes a conveyor, filling unit, capping unit, sensors, and a PLC controller. The primary purpose is to develop a system that can fully automate the process of filling containers with liquids and securely applying caps.

In industrial environments, accuracy is essential not only for quality but also for minimizing product waste. Through PLC control, the system ensures consistent filling levels, accurate timing, synchronized conveyor movement, and precise cap tightening. The developed machine is suitable for various liquid types and container sizes depending on system calibration.

Furthermore, the system is upgraded to include an **Automatic Labeling Unit**, ensuring that bottles are not only filled and capped but also labeled with product information before collection, simulating a complete end-to-end production line.

## 1.3 Project Objectives

The objectives of this project include the following:

• To design and implement a PLC-based control system for automating filling and capping operations.
• To demonstrate the use of sensors and actuators in synchronized industrial processes.
• To ensure accuracy in liquid dispensing using time-based or level-based control.
• To achieve proper bottle positioning and cap tightening through automated mechanisms.
• To create a scalable system that can be adapted for different industrial applications.

• To integrate an automated **Labeling Station** capable of applying stickers accurately on cylindrical bottles using stepper motors and sensors.

• To minimize human involvement in repetitive and hazardous processes.

• To increase production rate, efficiency, and safety in liquid packaging environments.

---

### 1.4 System Components Overview

The system consists of several integrated components that work together to perform filling and capping tasks efficiently.

#### 1.4.1 Programmable Logic Controller (PLC)

A compact industrial computer that controls the entire system.

**Primary roles:**

- Executes ladder logic
- Reads signals from sensors
- Controls motors, pumps, and actuators
- Implements safety logic
- Ensures sequence synchronization

**Why PLC is used:**

- High reliability in industrial environments
- Easy modification of the program
- Noise-resistant and durable

---

### 1.4.2 Conveyor System

Used to transport bottles from one stage to another.

**Includes:**

- Motorized belt
- Rollers or chains
- Bottle guides
- Speed adjustment unit

The conveyor must move smoothly to prevent bottle tipping or misalignment.

---

### 1.4.3 Sensors

***Proximity Sensors***

Used to detect bottle presence at filling and capping stations.

***Level Sensors (If used)***

Monitor the liquid level during filling.

***Photoelectric Sensors***

Used for more precise bottle detection.

***Limit Switches***

Detect mechanical movement limits, prevent over-travel, and act as safety feedback devices.

---

### 1.4.4 Filling Mechanism

Types of filling control:

1. **Gravity Filling**
2. **Pump Filling**
3. **Solenoid Valve Filling**

The PLC determines how long the valve stays open or how far a pump rotates to ensure accurate volume.

---

### 1.4.5 Capping Mechanism

Can include:

- Pneumatic cylinder for pressing caps
- Torque-controlled motor for screw caps
- Vibratory cap feeder (optional)

The system must align caps properly and tighten them securely without damaging the bottle.

---

**1.4.6 Labeling Mechanism** As seen in the project design, a labeling station is integrated after the capping unit.

- **Function:** Applies adhesive labels (stickers) to the bottles.
- **Key Components:**
    - **Stepper Motor:** Used to drive the label roll with high precision to stop exactly at the gap between stickers.

- **Label Sensor:** Detects the gap between labels to signal the PLC to stop the motor.
- **Wrapping Belt/Roller:** Presses the label onto the bottle while it rotates to ensure no air bubbles remain.

---

**1.4.7 Rotary Feeding and Collection Tables** To fully automate the process, the system utilizes rotary tables at the start and end of the line.

- **Feeding Table (In-feed):** A rotary disk that organizes empty bottles and feeds them one by one onto the conveyor belt using a guide rail.
- **Collection Table (Out-feed):** Located at the end of the line to accumulate the finished (filled, capped, and labeled) bottles, preventing them from falling off the conveyor.

---

**1.4.8 Actuators**

These convert PLC commands into mechanical motion.

Includes:

- DC motors
- Stepper motors
- Linear Actuator
- Solenoid valves
- Servo motors (for precise torque control)

---

### 1.4.9 Human-Machine Interface (HMI)

Displays (If included):

- System status
- Error messages
- Production count
- Manual controls and calibration settings

Makes the machine operator-friendly

---

## 1.5 Methodology

The development of the Automatic Filling and Capping Machine Using PLC follows a systematic engineering methodology. Each phase ensures that the final system is efficient, accurate, safe, and capable of meeting industrial automation requirements.

### 1.5.1 Requirement Analysis

In this phase, all system needs and constraints are identified.

**a) Bottle Specifications**

- Bottle size, height, and diameter
- Bottle material (plastic, glass, etc.)
- Required production speed (bottles/min)

**b) Liquid Characteristics**

- Viscosity
- Flow rate required
- Filling method (gravity, pump, or solenoid valve)

**c) Capping Requirements**

- Cap type (screw, press-fit, snap-on)
- Torque required
- Cap feeding mechanism

**d) Labeling Requirements**

- Label dimensions (height and length).
- Label roll specifications (gap size between stickers).
- Bottle surface type (must be clean and dry for adhesion).

**e) Hardware Requirements**

- PLC model and number of I/O points
- Types of sensors needed
- Motors and actuators
- Safety devices

The goal of this step is to fully define the technical and operational needs before designing.

---

### 1.5.2 System Design

This phase includes **mechanical design**, **electrical design**, and **control design**.

#### *a) Mechanical Design*

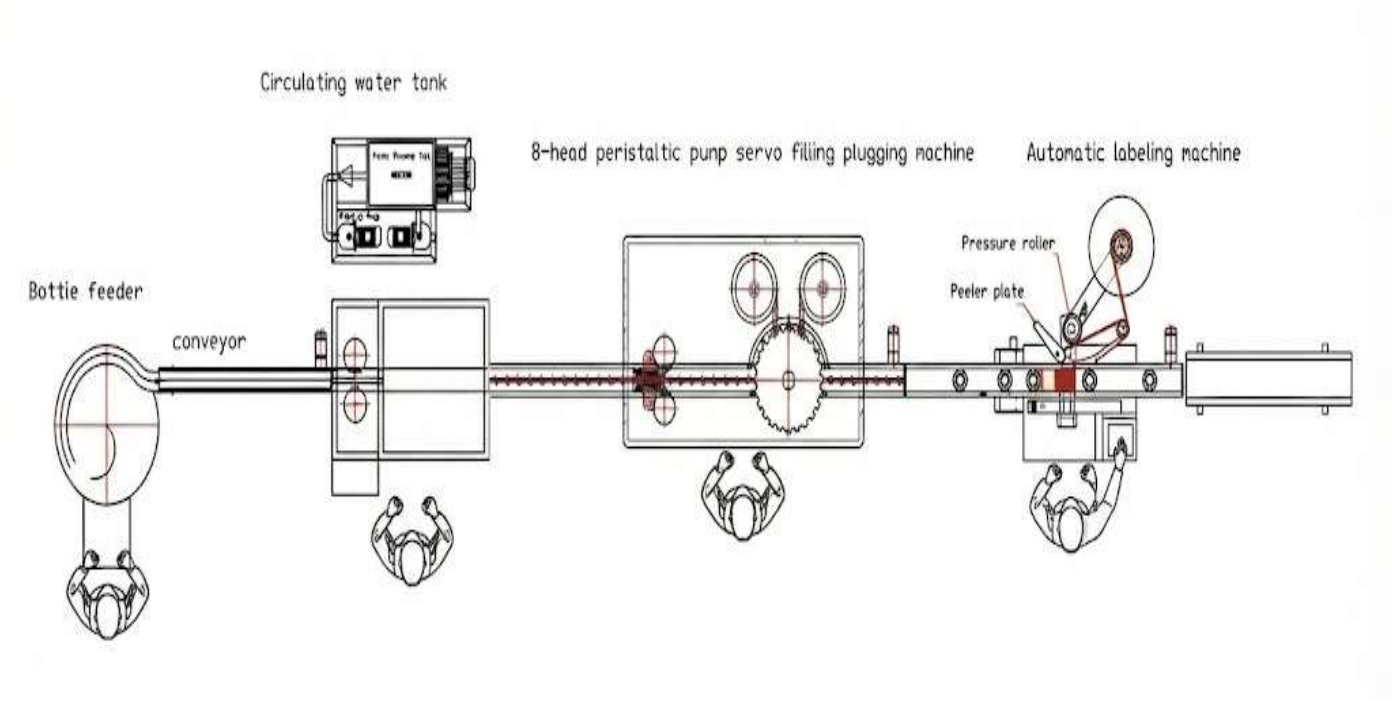


- Conveyor system layout
- Bottle guides and stopper mechanisms
- Filling nozzle structure
- Cap feeding and tightening unit
- Labeling mechanism
- Feeding system

Computer-Aided Design (CAD) tools may be used to design and simulate the structure before implementation.

### *b) Electrical Design*

- PLC wiring diagram
- Sensor and actuator wiring
- Power supply and relays
- Overload and short-circuit protection
- Motor driver connections

All components are placed in a well-organized control panel for easy troubleshooting.

### *c) Control System Design*

- Deciding the sequence of operations
- Interlocking conditions
- Timing diagrams
- Emergency stop logic
- Safety interlocks for overload, jam, or missing bottle

To visualize the control architecture, the system's inputs (sensors and switches) and outputs (motors and actuators) are connected to the PLC as shown in the block diagram below. This diagram illustrates how the controller processes feedback from the production line to manage the actuators.

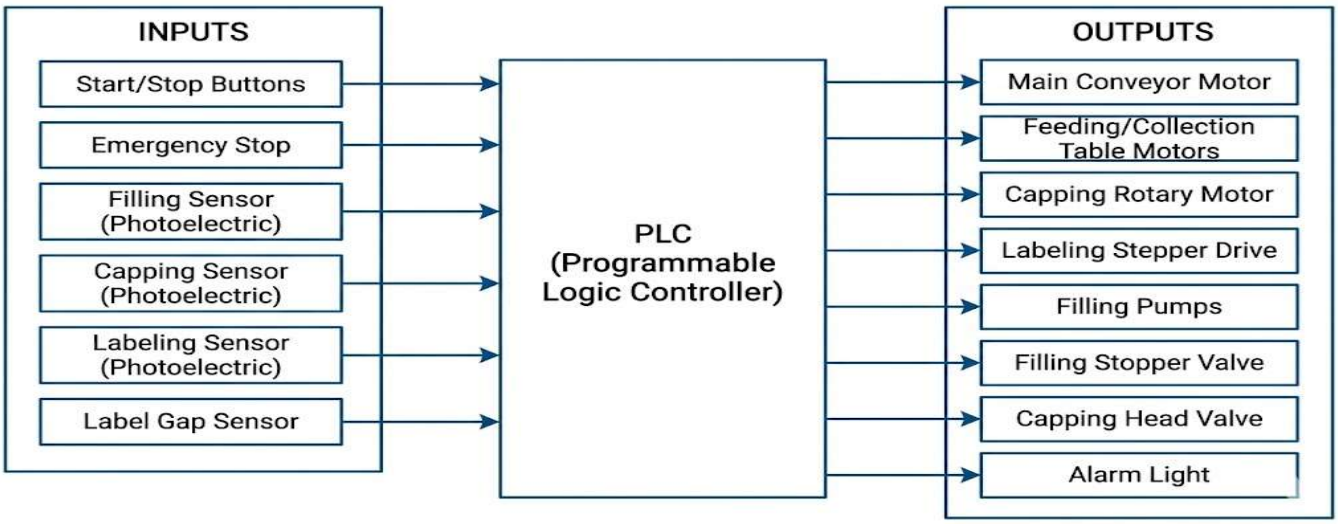

### 1.5.3 PLC Programming

The control logic is programmed using **Ladder Logic**, the standard language used in industrial automation.

The logical sequence of operations is critical for the automation process. The flowchart below details the step-by-step execution of the machine's cycle, starting from the initialization of the conveyor to the final collection of the labeled bottle.

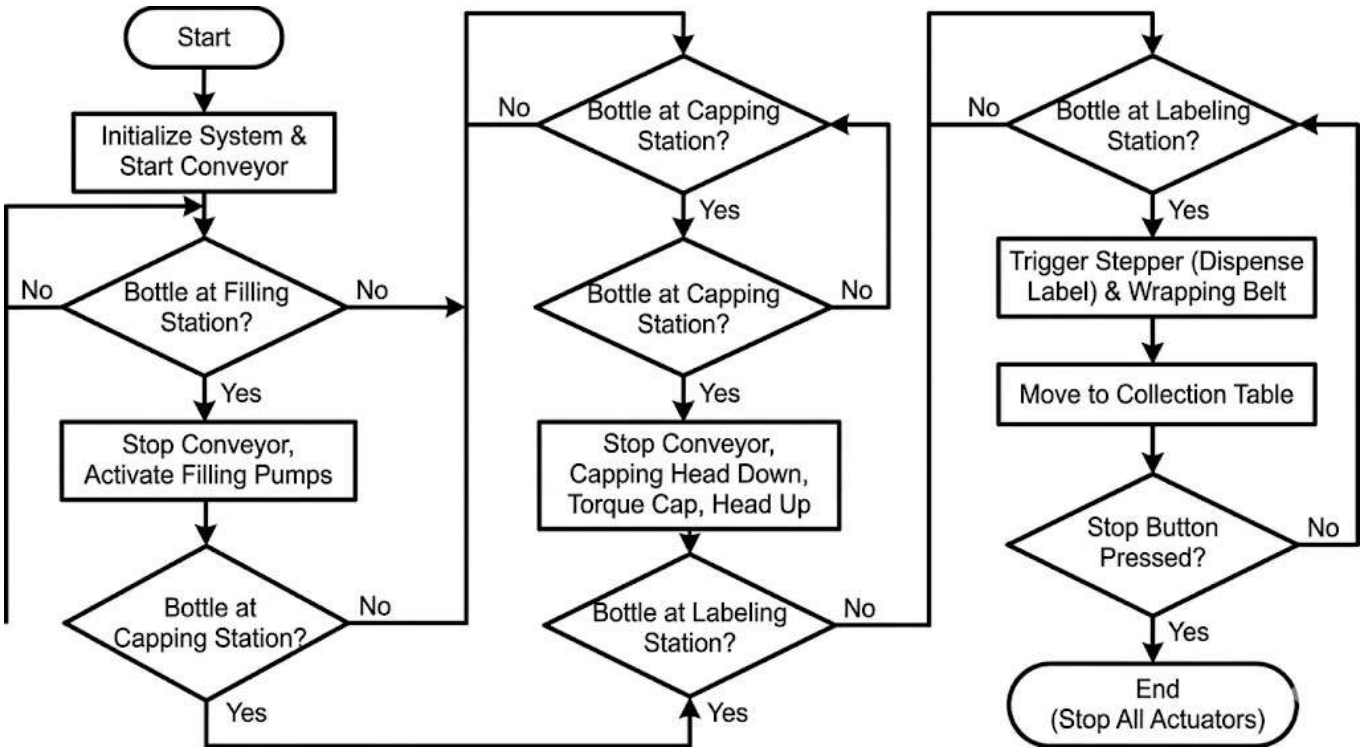


Operational Flowchart of the automated filling, capping, and labeling process.

The program contains the following modules:

***a) Bottle Detection Module***

- Starts the filling sequence when a bottle is detected
- Stops operation if no bottle is present

***b) Filling Module***

- Opens the solenoid valve or controls the pump
- Uses timers or level sensors for accurate filling
- Prevents overfill through safety interlocks

***c) Capping Module***

- Detects presence of cap
- Engages servo or motor to tighten cap
- Stops if cap is missing or misaligned

**d) Labeling Module**

- Detects the bottle at the labeling station.
- Activates the stepper motor to dispense one label.
- Uses the label sensor to stop the motor exactly at the label gap.
- Engages the wrapping motor to smooth the label around the bottle.

***e) Conveyor Control Module***

- Coordinates bottle movement with filling and capping stations.
- Stops conveyor during filling/capping to avoid spillage.

***f) Safety & Error Handling Module***

- Emergency stop logic
- Jam detection
- Overflow protection
- Alarms and buzzer output

Every module is tested individually before full integration.

---

### 1.5.4 System Integration

This is where mechanical, electrical, and control components are combined into one complete system.

**Integration tasks include:**

- Mounting sensors and adjusting their positions
- Connecting motors, valves, and actuators
- Calibrating the filling mechanism
- Aligning the capping mechanism
- Synchronizing conveyor movement
- Connecting all devices to the PLC panel

After integration, the system undergoes initial testing to identify wiring errors, misalignment, or timing issues.

---

### 1.5.5 Testing and Optimization

After integration, the system is tested under real working conditions.

***a) Functional Testing***

- Bottle detection accuracy
- Consistency of filling volume
- Capping torque and alignment
- Conveyor speed and synchronization

***b) Performance Testing***

- Cycle time measurement
- Bottles per minute output
- Repeatability and stability

***c) Safety Testing***

- Emergency stop
- Overload protection
- Bottle jam detection

***d) Optimization***

Adjustments are made to:

- Filling time
- Conveyor speed
- Cap tightening torque
- Sensor sensitivity
- PLC timing values

The final system is then ready for demonstration and documentation.

## 1.6 Benefits of the Automated System

- Higher production rates.
- Increased accuracy and reduced waste.
- Lower operational cost due to reduced labor.
- Improved safety during hazardous tasks.
- Ease of customization and expansion.
- Consistent and repeatable quality of output.

---

## 1.7 Scope of the Project

The project covers the design, programming, testing, and demonstration of a prototype-scale automated filling and capping system. Future enhancements could include multi-head filling, automatic cap feeding, advanced HMI control, and computer-based monitoring.

---

## 1.8 Summary

This chapter presented an extensive overview of the project, outlining system objectives, components, benefits, and methodology. The following chapters will provide detailed design descriptions, PLC program development, system integration, and performance evaluation.