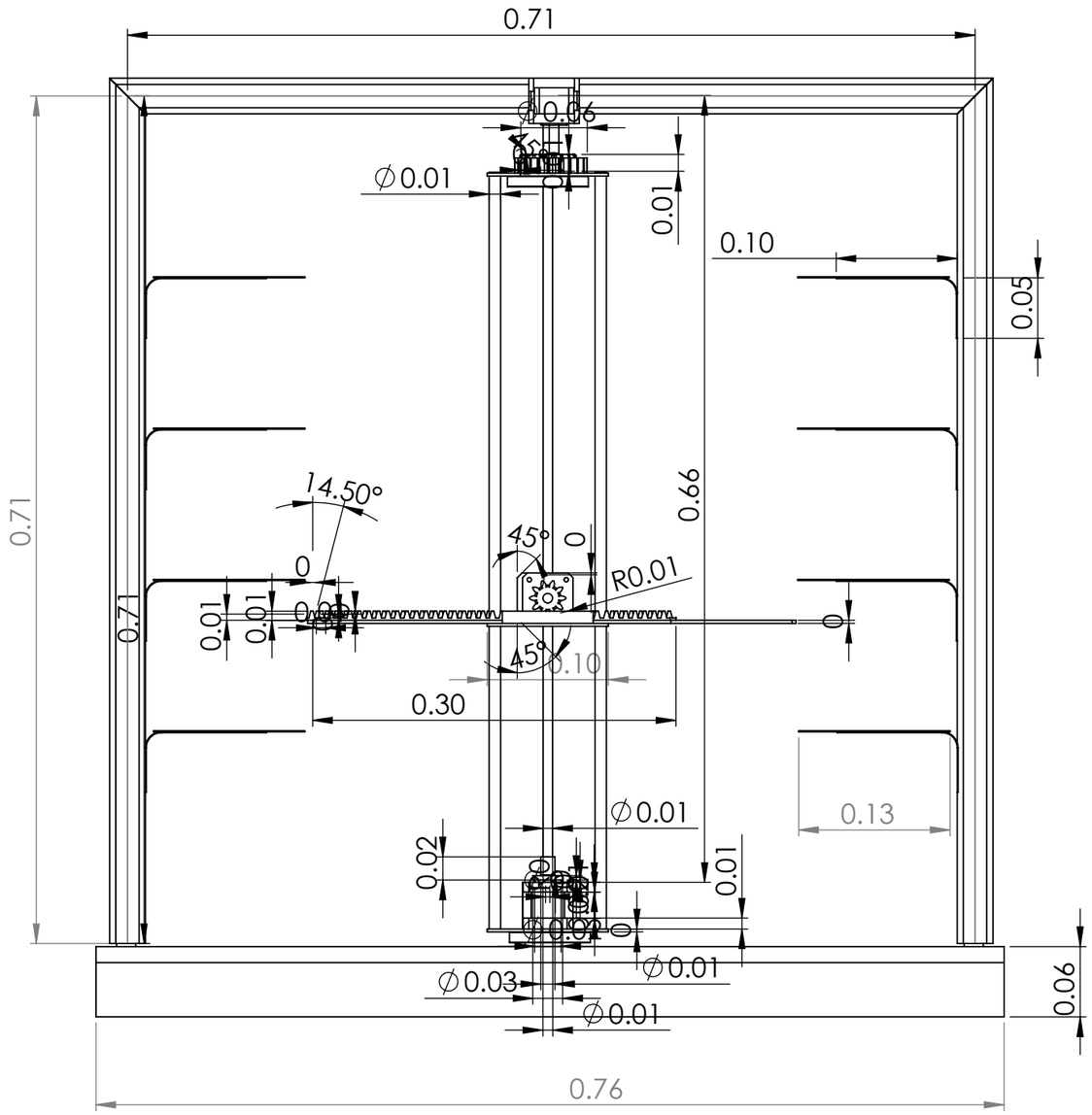

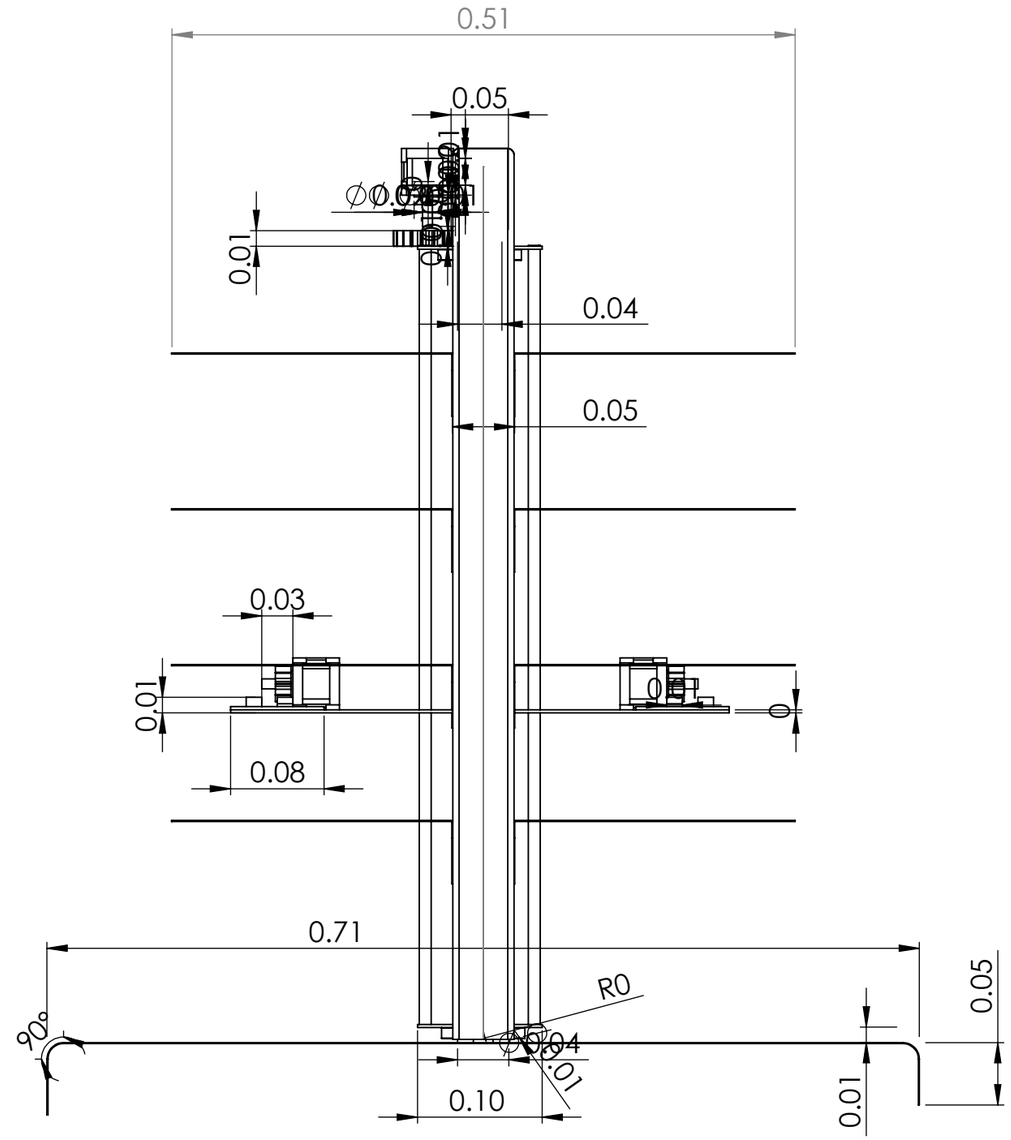

UNLESS OTHERWISE SPECIFIED: DIMENSIONS ARE IN MILLIMETERS SURFACE FINISH: TOLERANCES: LINEAR: ANGULAR:	FINISH: 02.03.18			DEBURR AND BREAK SHARP EDGES	DO NOT SCALE DRAWING	REVISION
	NAME	SIGNATURE	DATE		TITLE:	
DRAWN	MD. Shahewz Ahsan		02.03.18		Multilevel Car Parking	
CHK'D						
APPV'D						
MFG						
Q.A				MATERIAL:	DWG NO. Drawing	A3
				WEIGHT:	SCALE:1:10	SHEET 1 OF 1