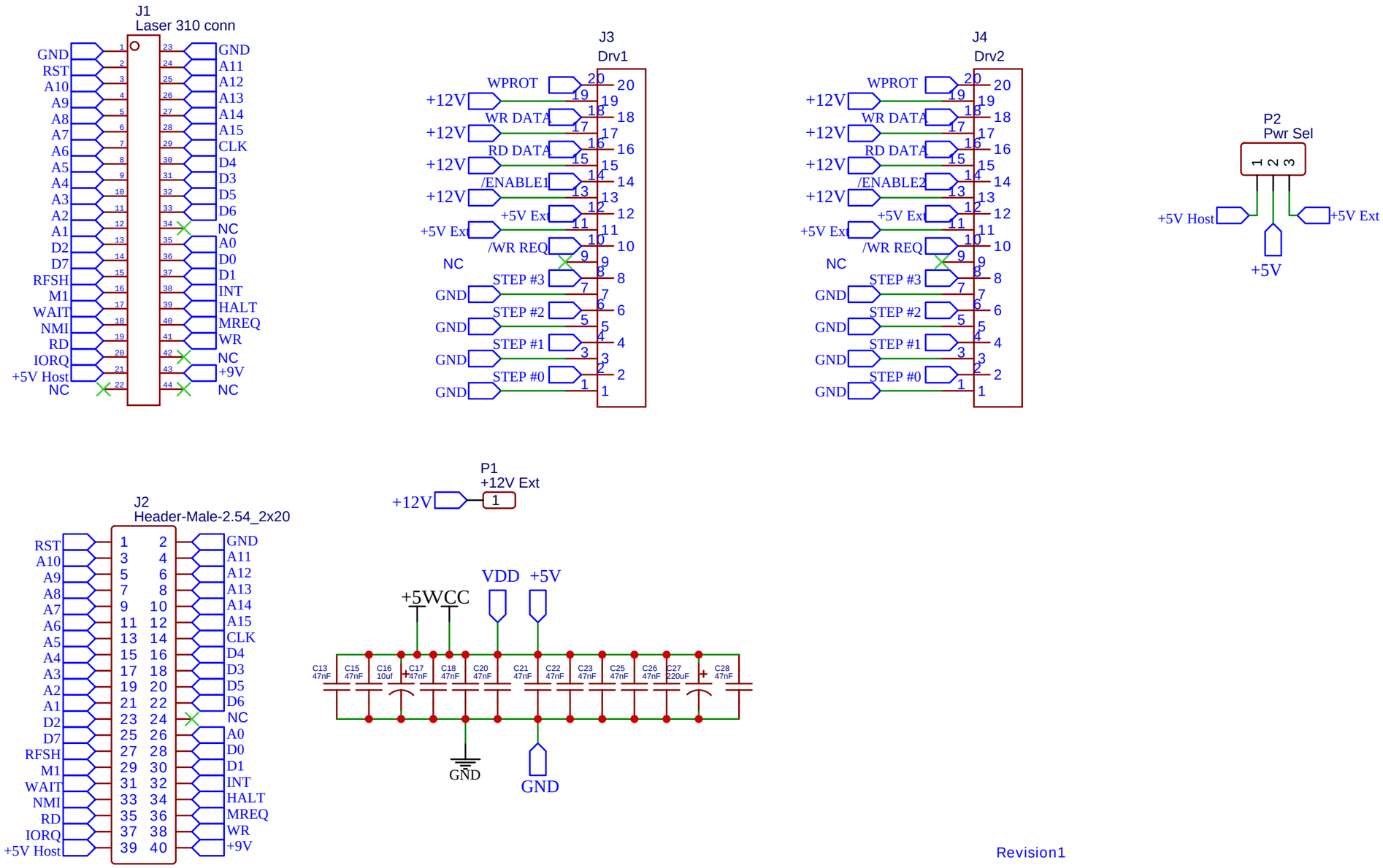

Revision1

WPROT: +5V protected; Gnd - not protected
U8, 74HC273, /MR : Active low to reset

U1 : 27C64
U2 : 73LS138
U3 : 74LS32
U4 : 74LS244
U5 : 74LS164
U6 : 74LS138
U7 : 74LS125
U8 : 74LS273
U9 : 74LS00
U10: 74LS74

TITLE: DI-40 Floppy interface - connectors		REV: 1.1
EasyEDA	Company: Your Company	Sheet: 1/1
	Date: 2020-10-27 Drawn By: Bill	

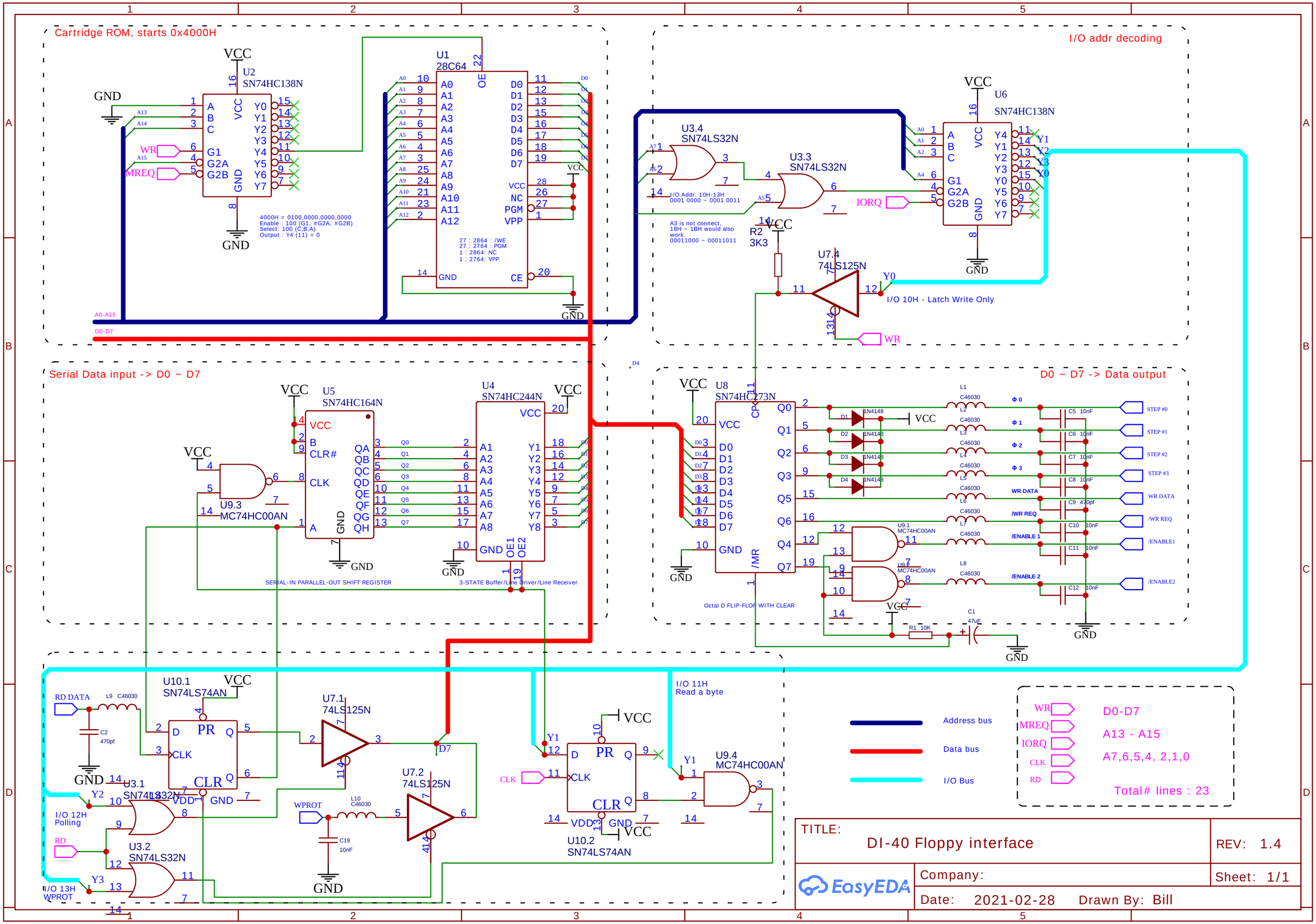
Cartridge ROM, starts 0x4000H
U2
SN74HC138N
U1
28C64
4000H = 0100,0000,0000,0000
Enable : 100 (G1, #G2A, #G2B)
Select: 100 (C,B,A)
Output : Y4 (11) = 0
27 : 2864 : /WE
27 : 2764 : PGM
1 : 2864: NC
1 : 2764: VPP
A0-A15
D0-D7
I/O addr decoding
U3.4
SN74LS32N
U3.3
SN74LS32N
I/O Addr. 10H-13H
0001 0000 ~ 0001 0011
A3 is not connect,
18H ~ 1BH would also
work.
00011000 ~ 00011011
U6
SN74HC138N
R2
3K3
U7.4
74LS125N
I/O 10H - Latch Write Only
Serial Data input -> D0 ~ D7
U5
SN74HC164N
U4
SN74HC244N
U9.3
MC74HC00AN
SERIAL-IN PARALLEL-OUT SHIFT REGISTER
3-STATE Buffer/Line Driver/Line Receiver
D0 ~ D7 -> Data output
U8
SN74HC273N
Octal D FLIP-FLOP WITH CLEAR
1N4148
C46030
STEP #0
STEP #1
STEP #2
STEP #3
WR DATA
/WR REQ
/ENABLE1
/ENABLE2
U9.1
MC74HC00AN
U9.2
MC74HC00AN
R1 10K
C1
47uF
U10.1
SN74LS74AN
RD DATA
U7.1
74LS125N
U7.2
74LS125N
U3.1
SN74LS32N
U3.2
SN74LS32N
I/O 12H
Polling
I/O 13H
WPROT
I/O 11H
Read a byte
U10.2
SN74LS74AN
U9.4
MC74HC00AN
Address bus
Data bus
I/O Bus
WR
MREQ
IORQ
CLK
RD
D0-D7
A13 - A15
A7,6,5,4, 2,1,0
Total# lines : 23
TITLE:
DI-40 Floppy interface
REV: 1.4
Company:
Sheet: 1/1
Date: 2021-02-28
Drawn By: Bill
EasyEDA