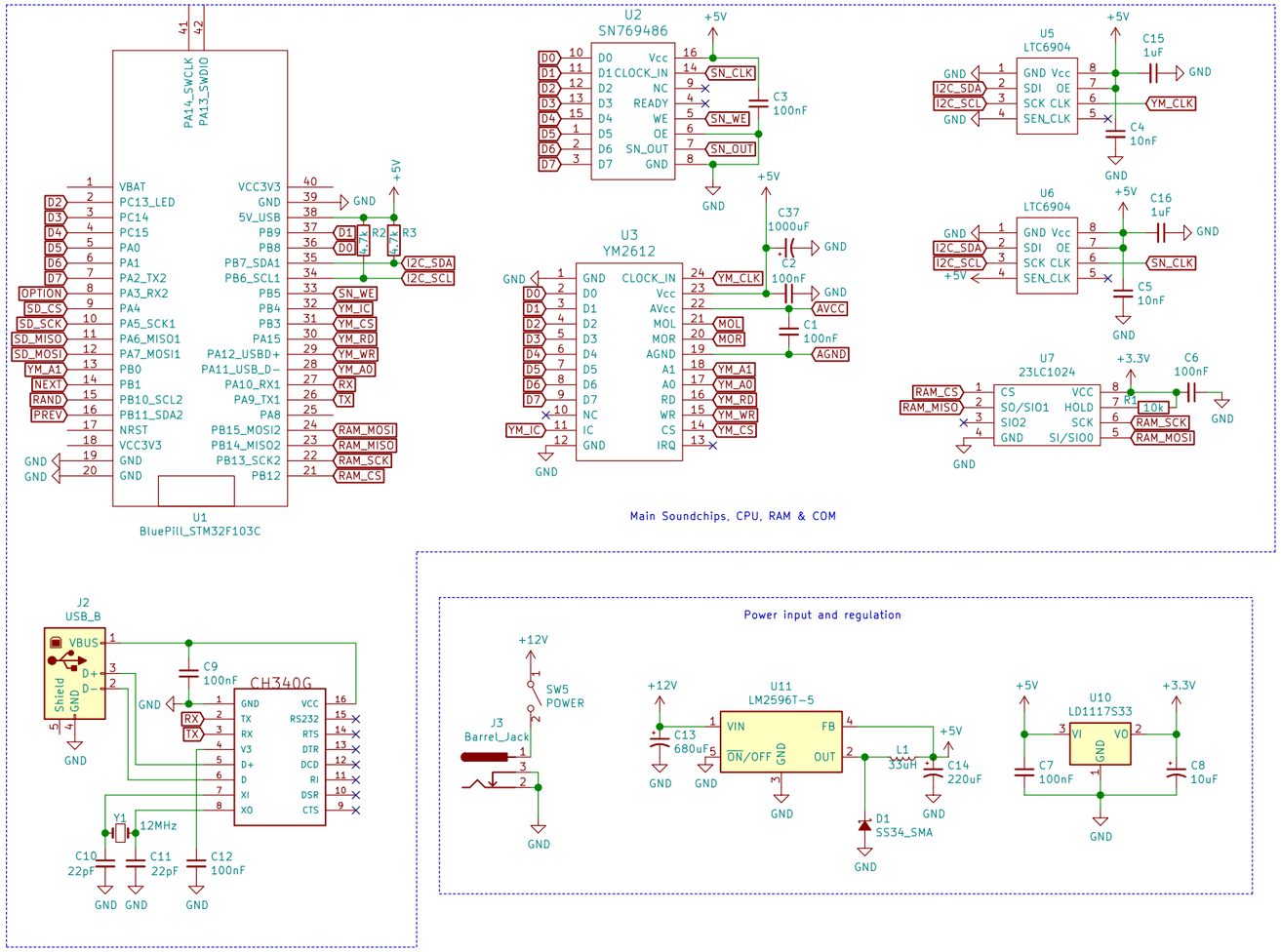

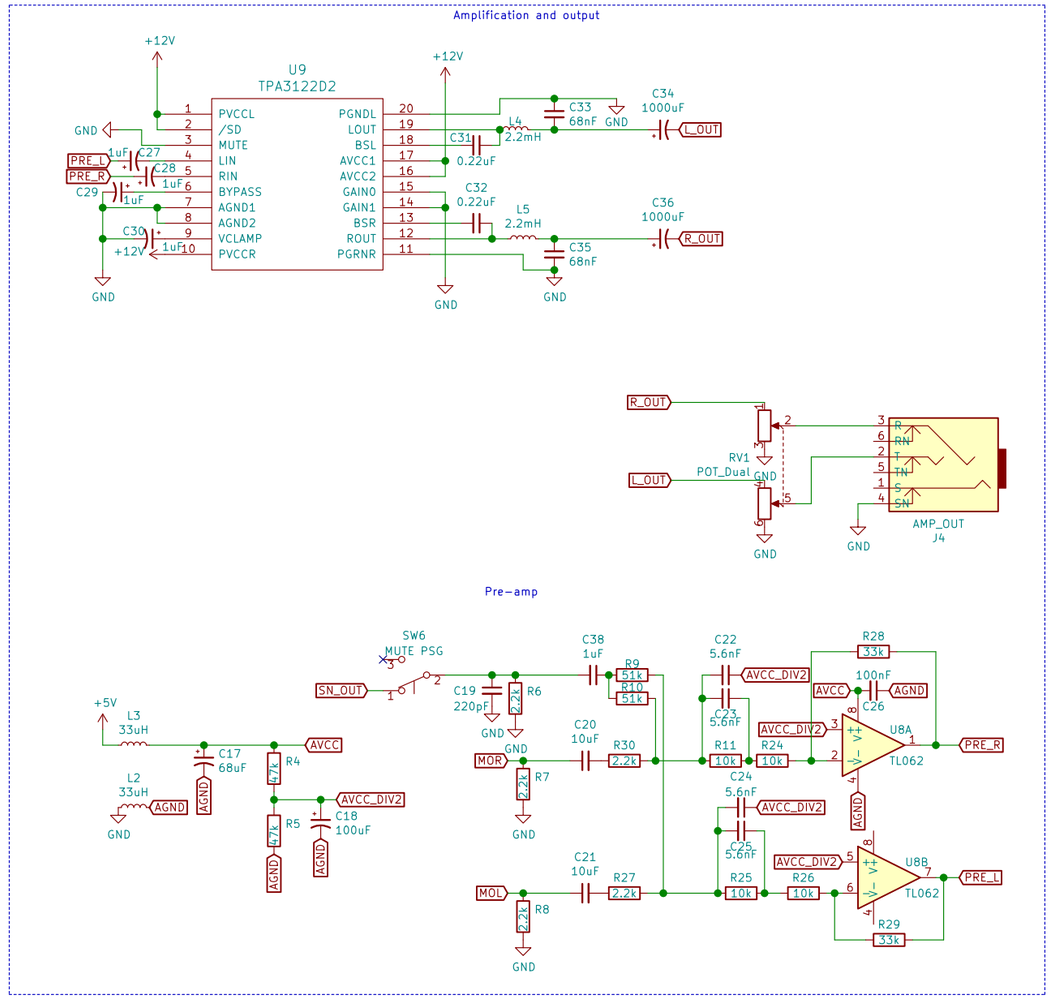

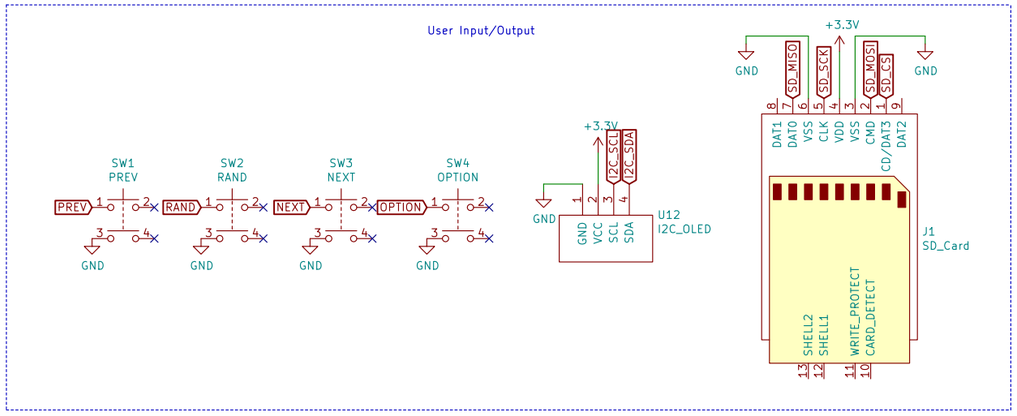

Designed and Programmed by:
Aidan Lawrence
www.aidanlawrence.com

Sheet: /
File: STM32_MegaBlaster.sch

Title: MegaBlaster STM32 Video Game Music Player

Size: A3	Date: Sunday, April 22 2018	Rev: 4b
KiCad E.D.A. kicad (5.0.0-3-g5ebb6b6)		Id: 1/1