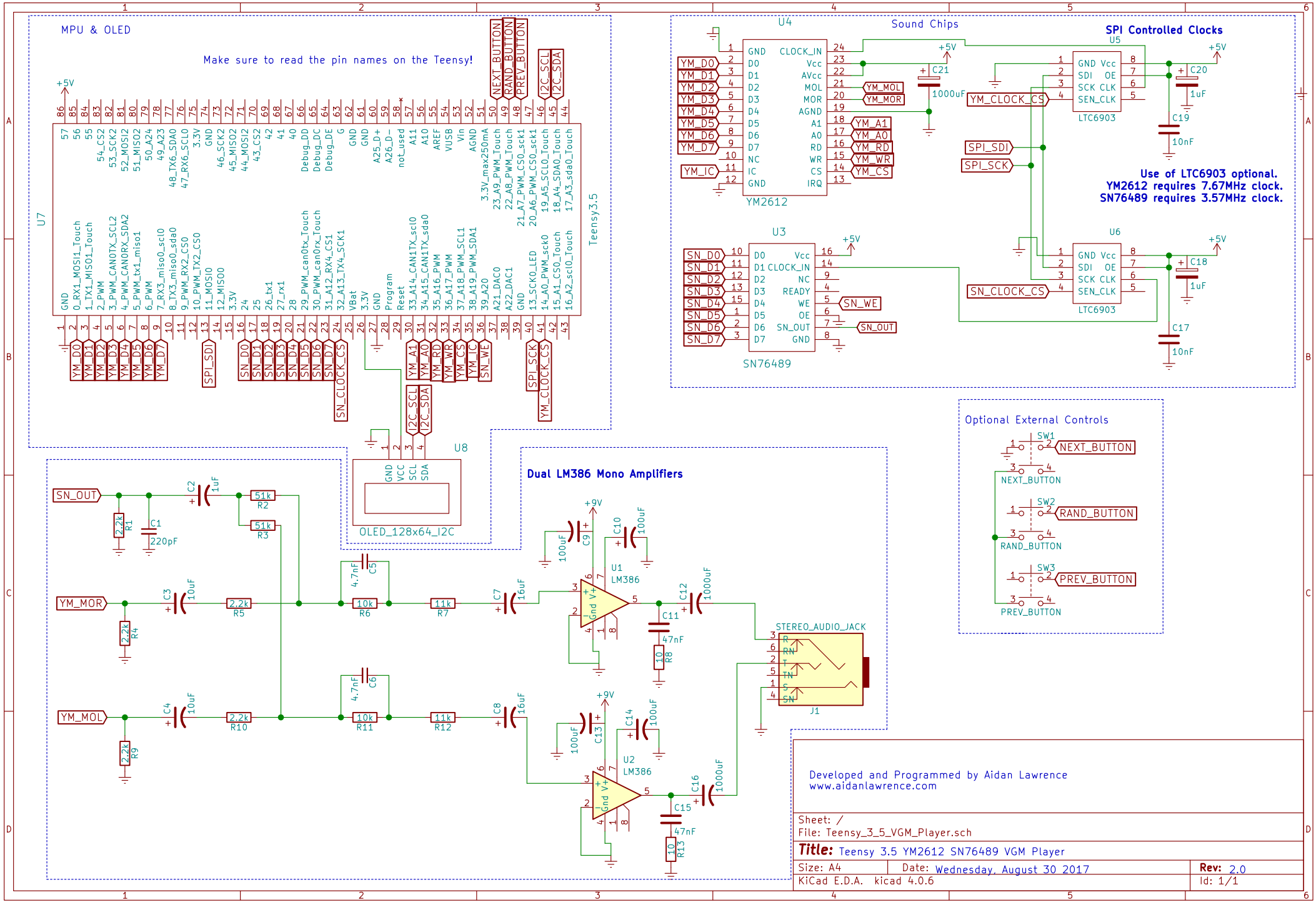
MPU & OLED
Make sure to read the pin names on the Teensy!
U7
Teensy3.5
U8
OLED_128x64_I2C
Sound Chips
U4
YM2612
U3
SN76489
SPI Controlled Clocks
U5
U6
LTC6903
Use of LTC6903 optional.
YM2612 requires 7.67MHz clock.
SN76489 requires 3.57MHz clock.
Dual LM386 Mono Amplifiers
U1
U2
LM386
STEREO_AUDIO_JACK
J1
Optional External Controls
SW1
SW2
SW3
NEXT_BUTTON
RAND_BUTTON
PREV_BUTTON
Developed and Programmed by Aidan Lawrence
www.aidanlawrence.com
Sheet: /
File: Teensy_3_5_VGM_Player.sch
Title: Teensy 3.5 YM2612 SN76489 VGM Player
Size: A4
Date: Wednesday, August 30 2017
Rev: 2.0
KiCad E.D.A. kicad 4.0.6
Id: 1/1