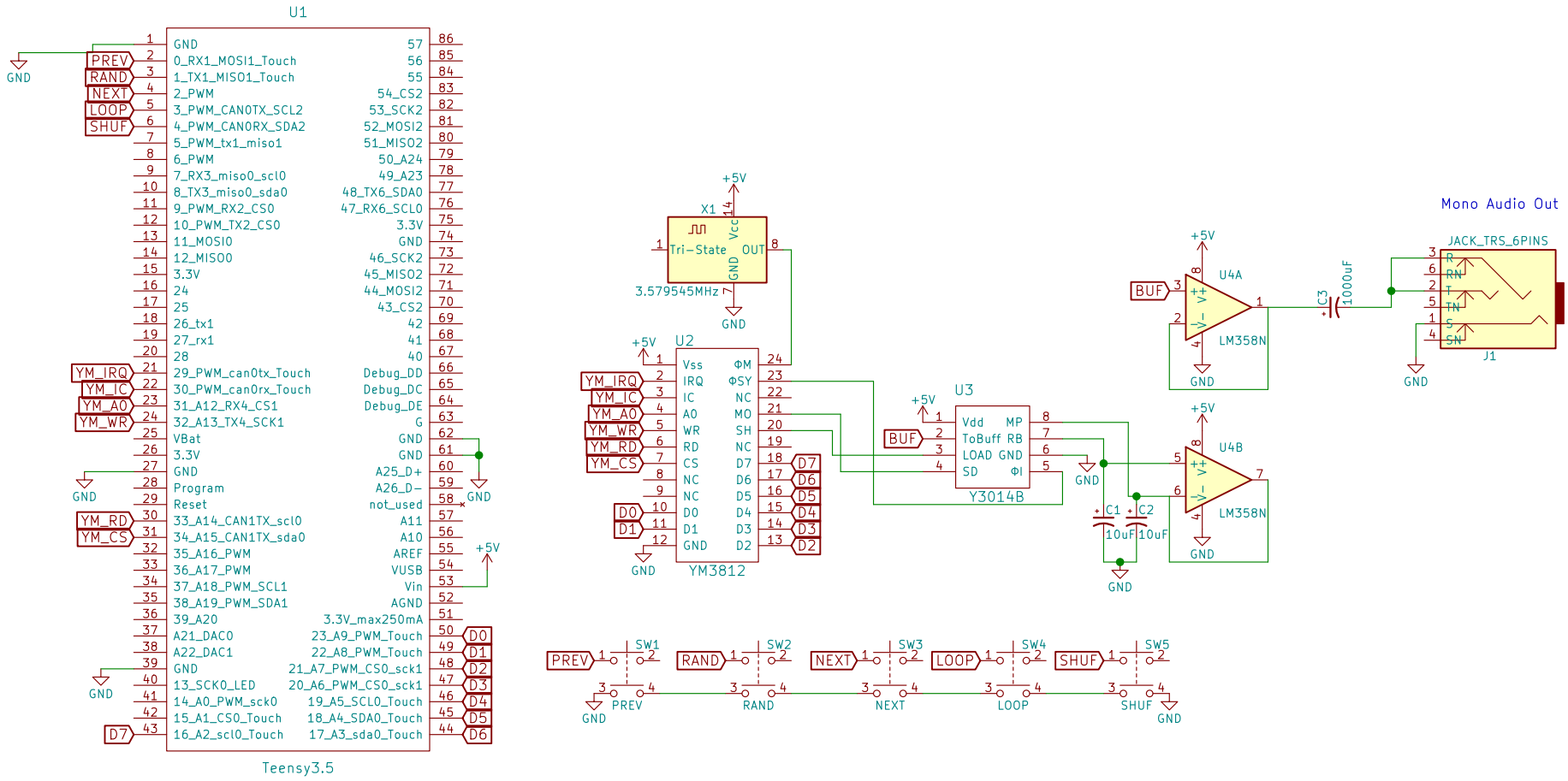

Designed and Programmed by:
Aidan Lawrence
www.aidanlawrence.com

Sheet: /
File: OPL2_VGM_Player.sch

Title: OPL2 VGM Player

Size: A4	Date: Saturday, January 20th 2018	Rev:
KiCad E.D.A. kicad 4.0.7		Id: 1/1