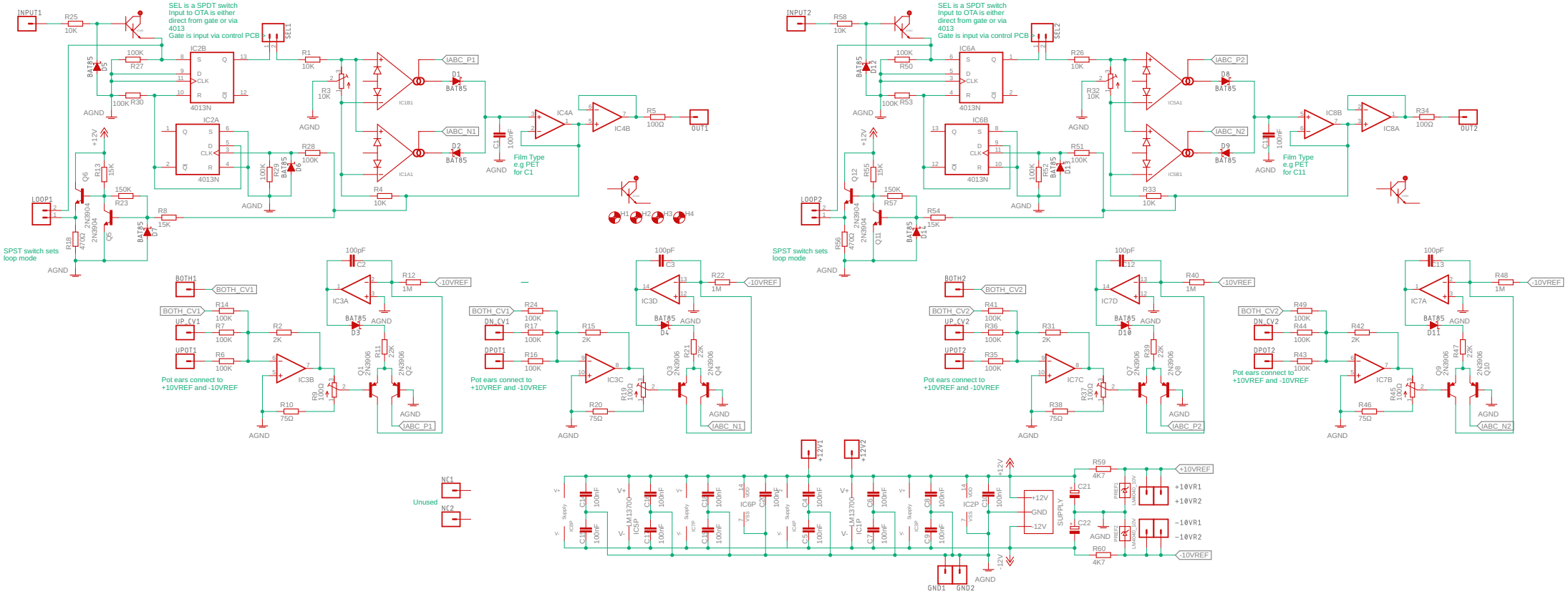
INPUT1
R25
10K
SEL is a SPDT switch
Input to OTA is either
direct from gate or via
4013
Gate is input via control PCB
SEL1
IC2B
4013N
IC2A
4013N
R27
100K
R30
100K
R1
10K
R3
10K
R28
100K
R29
100K
R4
10K
IC1B1
IC1A1
IABC_P1
IABC_N1
D1
BAT85
D2
BAT85
C1
100nF
Film Type
e.g PET
for C1
IC4A
IC4B
R5
100Ω
OUT1
AGND
+12V
Q6
2N3904
Q5
2N3904
R13
15K
R23
150K
R8
15K
D7
BAT85
LOOP1
R18
470Ω
SPST switch sets
loop mode
H1
H2
H3
H4
INPUT2
R58
10K
SEL2
IC6A
4013N
IC6B
4013N
R50
100K
R53
100K
R26
10K
R32
10K
R33
10K
IC5A1
IC5B1
IABC_P2
IABC_N2
D8
BAT85
D9
BAT85
C11
100nF
Film Type
e.g PET
for C11
IC8B
IC8A
R34
100Ω
OUT2
Q12
2N3904
Q11
2N3904
R55
15K
R57
150K
R54
15K
R51
100K
R52
R56
470Ω
D11
BAT85
LOOP2
SPST switch sets
loop mode
BOTH1
BOTH_CV1
UP_CV1
UPOT1
R14
100K
R7
100K
R6
100K
R2
2K
IC3B
R9
100Ω
R10
75Ω
Pot ears connect to
+10VREF and -10VREF
C2
100pF
IC3A
R12
1M
-10VREF
D3
BAT85
R11
22K
Q1
2N3906
Q2
2N3906
IABC_P1
DN_CV1
DPOT1
R24
100K
R17
100K
R16
100K
R15
2K
IC3C
R19
100Ω
R20
75Ω
Pot ears connect to
+10VREF and -10VREF
C3
100pF
IC3D
R22
1M
D4
BAT85
R21
22K
Q3
2N3906
Q4
2N3906
IABC_N1
BOTH2
BOTH_CV2
UP_CV2
UPOT2
R41
100K
R36
100K
R35
100K
R31
2K
IC7C
R37
100Ω
R38
75Ω
Pot ears connect to
+10VREF and -10VREF
C12
100pF
IC7D
R40
1M
D10
BAT85
R39
22K
Q7
2N3906
Q8
2N3906
IABC_P2
DN_CV2
DPOT2
R49
100K
R44
100K
R43
100K
R42
2K
IC7B
R45
100Ω
R46
75Ω
Pot ears connect to
+10VREF and -10VREF
C13
100pF
IC7A
R48
1M
D11
BAT85
R47
22K
Q9
2N3906
Q10
2N3906
IABC_N2
NC1
NC2
Unused
IC6P
IC5P
IC4P
IC3P
IC2P
IC1P
LM13700
+12V1
+12V2
+12V
-12V
SUPPLY
GND
R59
4K7
R60
4K7
C21
C22
+10VREF
+10VR1
+10VR2
-10VR1
-10VR2
-10VREF
GND1
GND2