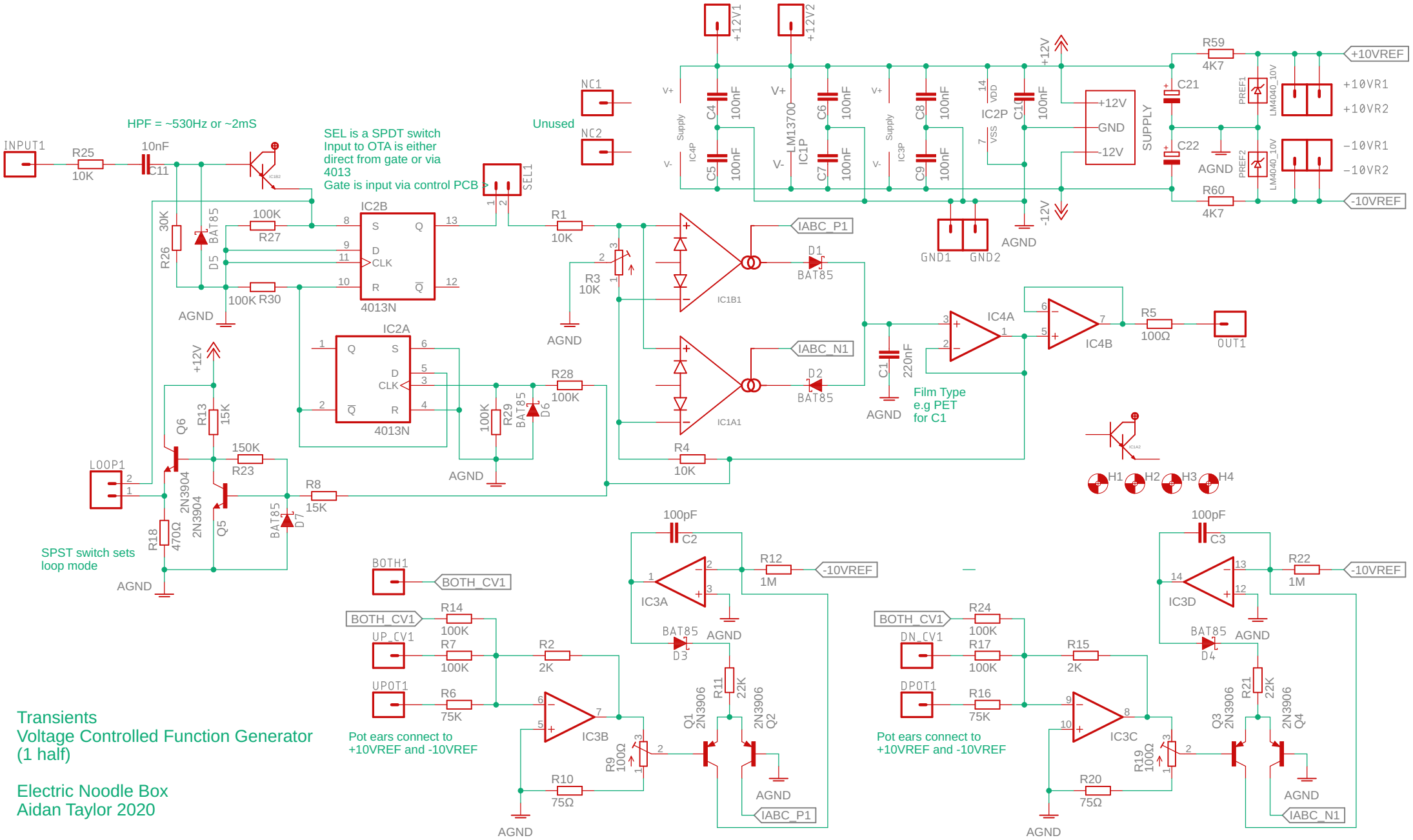

Transients
Voltage Controlled Function Generator
(1 half)

Electric Noodle Box
Aidan Taylor 2020