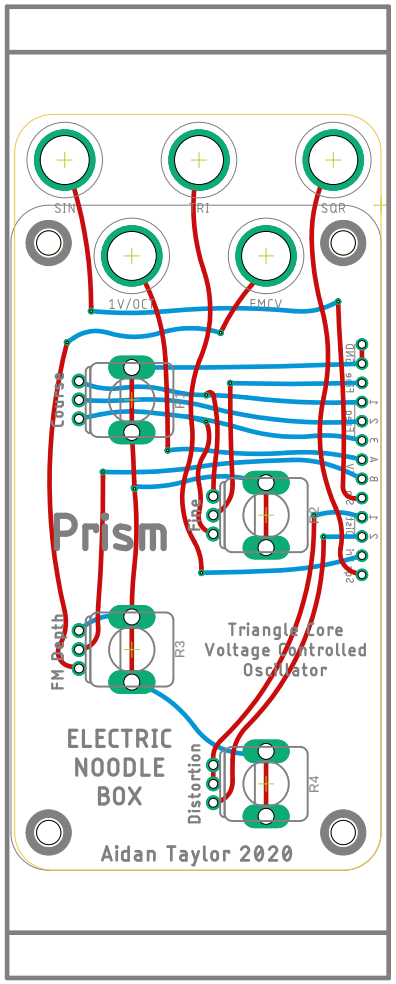
SIN
RI
SQR
1V/OCT
EMCV
Coarse
R1
Fine
R2
Prism
FM Depth
R3
Triangle Core
Voltage Controlled
Oscillator
ELECTRIC
NOODLE
BOX
Distortion
R4
Aidan Taylor 2020