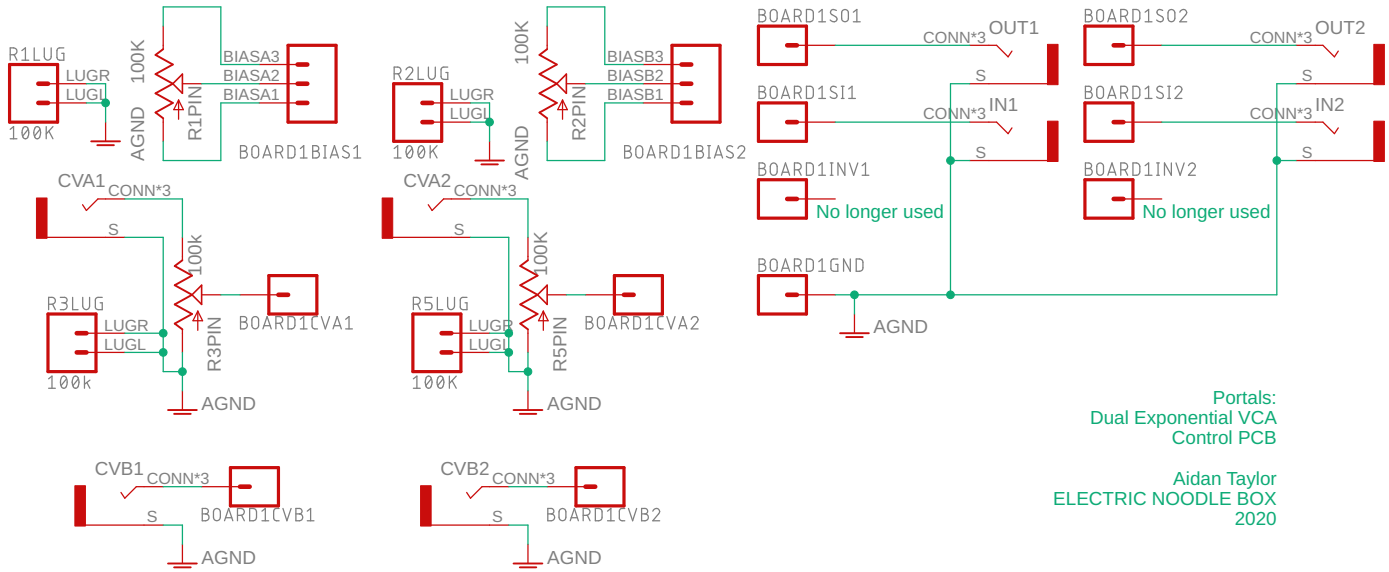

Portals:
Dual Exponential VCA
Control PCB

Aidan Taylor
ELECTRIC NOODLE BOX
2020