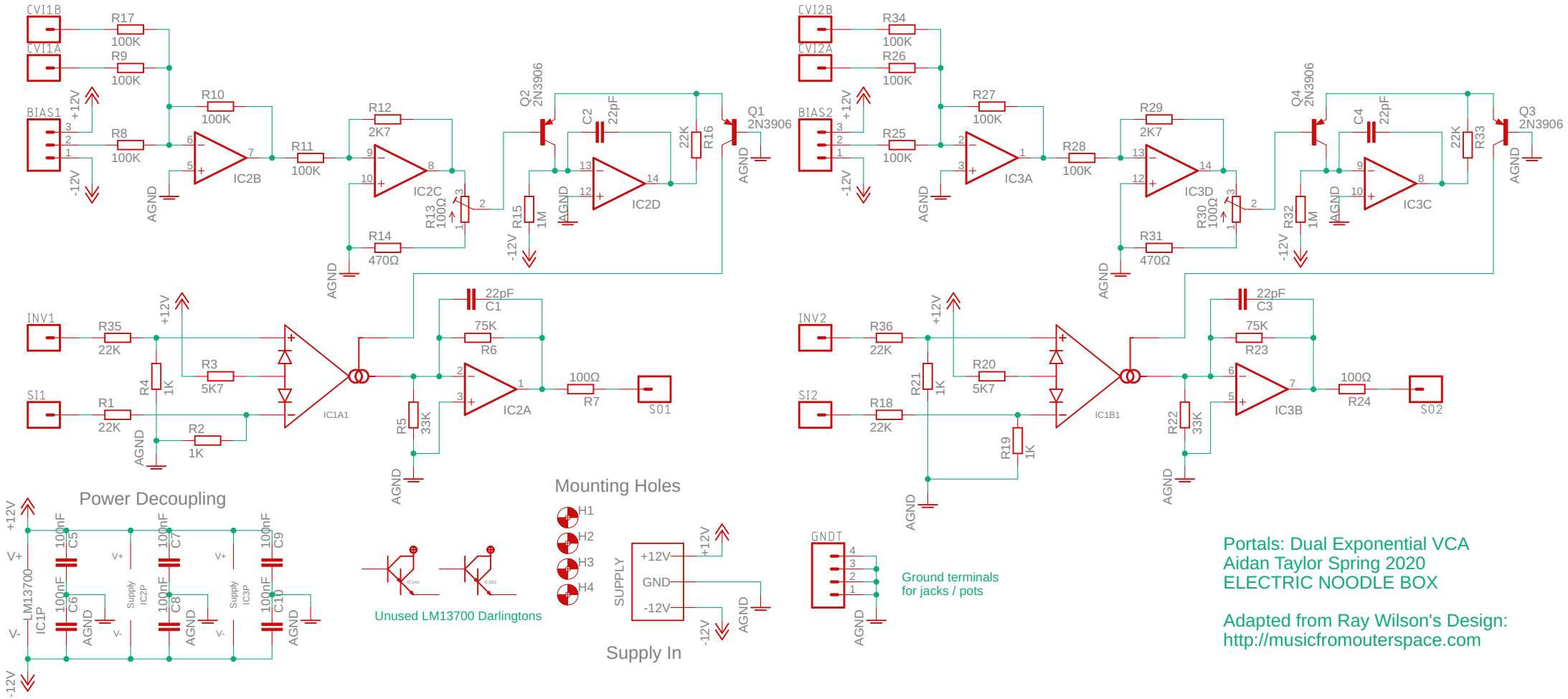

Portals: Dual Exponential VCA
Aidan Taylor Spring 2020
ELECTRIC NOODLE BOX

Adapted from Ray Wilson's Design:
http://musicfromouterspace.com