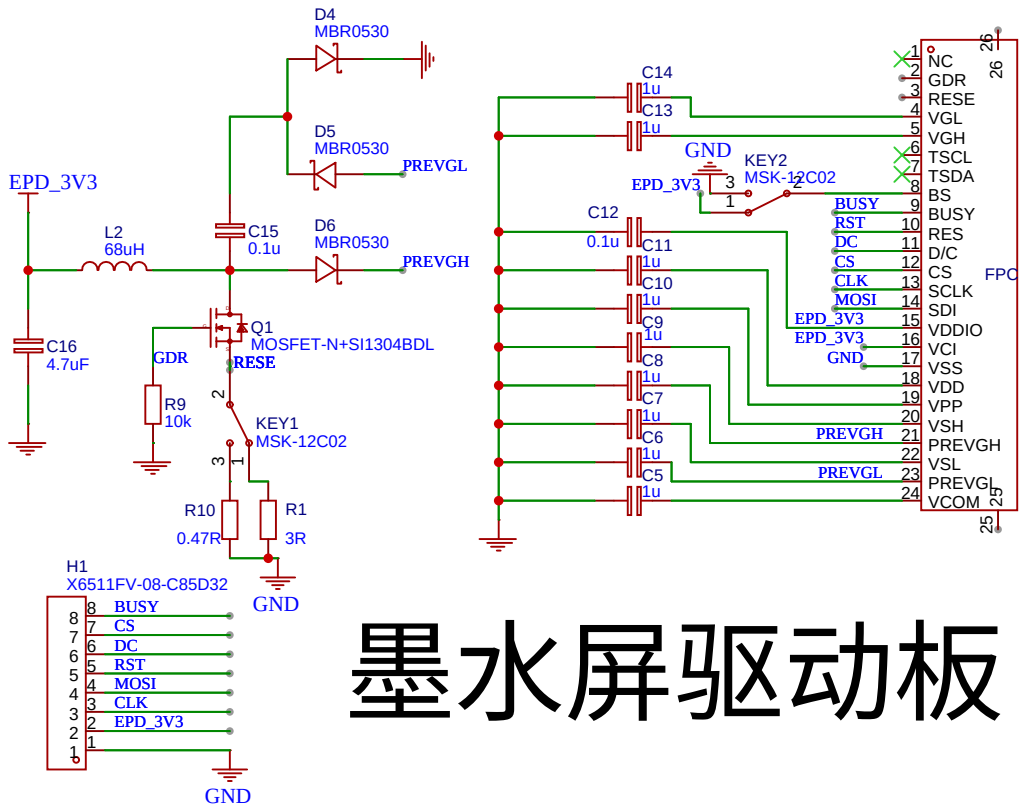

墨水屏驱动板

TITLE: esp32墨水屏驱动与底座		REV: 1.0
立创EDA	Company: Your Company	Sheet: 1/1
	Date: 2020-08-26 Drawn By: smldhz	