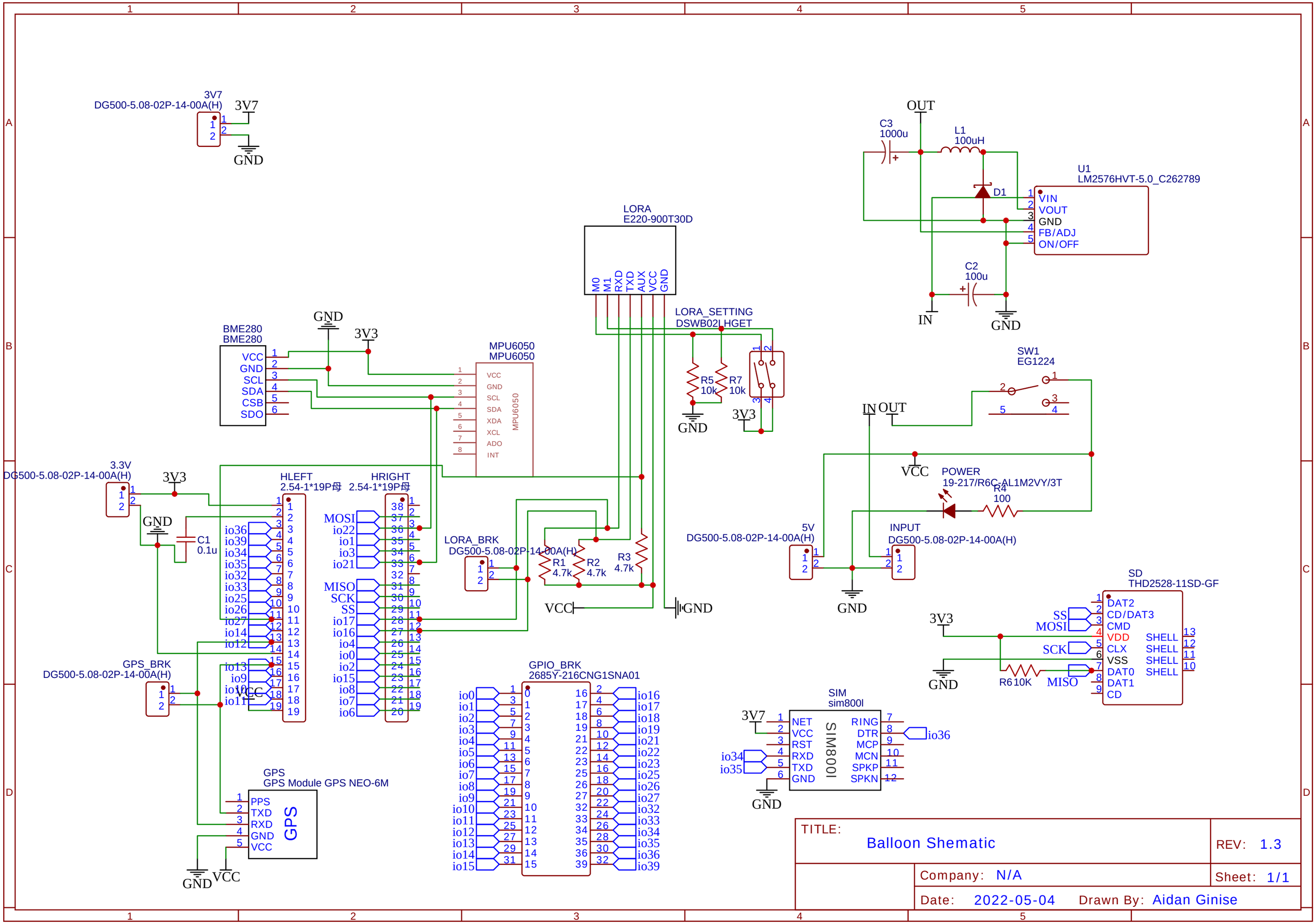
3V7
DG500-5.08-02P-14-00A(H)
3V7
GND
OUT
C3
1000u
L1
100uH
U1
LM2576HVT-5.0_C262789
D1
VIN
VOUT
GND
FB/ADJ
ON/OFF
C2
100u
IN
GND
LORA
E220-900T30D
M0
M1
RXD
TXD
AUX
VCC
GND
LORA_SETTING
DSWB02LHGET
R5
10k
R7
10k
3V3
GND
BME280
BME280
VCC
GND
SCL
SDA
CSB
SDO
GND
3V3
MPU6050
MPU6050
VCC
GND
SCL
SDA
XDA
XCL
ADO
INT
MPU6050
SW1
EG1224
IN
OUT
VCC
POWER
19-217/R6C-AL1M2VY/3T
R4
100
5V
DG500-5.08-02P-14-00A(H)
INPUT
DG500-5.08-02P-14-00A(H)
GND
3.3V
DG500-5.08-02P-14-00A(H)
3V3
GND
C1
0.1u
HLEFT
2.54-1*19P母
HRIGHT
2.54-1*19P母
io36
io39
io34
io35
io32
io33
io25
io26
io27
io14
io12
io13
io9
io10
io11
MOSI
io22
io1
io3
io21
MISO
SCK
SS
io17
io16
io4
io0
io2
io15
io8
io7
io6
LORA_BRK
DG500-5.08-02P-14-00A(H)
R1
4.7k
R2
4.7k
R3
4.7k
VCC
GND
GPS_BRK
DG500-5.08-02P-14-00A(H)
VCC
GPIO_BRK
2685Y-216CNG1SNA01
io0
io1
io2
io3
io4
io5
io6
io7
io8
io9
io10
io11
io12
io13
io14
io15
io16
io17
io18
io19
io21
io22
io23
io25
io26
io27
io32
io33
io34
io35
io36
io39
GPS
GPS Module GPS NEO-6M
PPS
TXD
RXD
GND
VCC
GPS
GND
VCC
SIM
sim800l
3V7
NET
VCC
RST
RXD
TXD
GND
io34
io35
SIM800l
RING
DTR
MCP
MCN
SPKP
SPKN
io36
GND
SD
THD2528-11SD-GF
DAT2
CD/DAT3
CMD
VDD
CLX
VSS
DAT0
DAT1
CD
SHELL
SHELL
SHELL
SHELL
SS
MOSI
SCK
MISO
3V3
R6 10K
GND
TITLE:
Balloon Shematic
REV: 1.3
Company: N/A
Sheet: 1/1
Date: 2022-05-04
Drawn By: Aidan Ginise