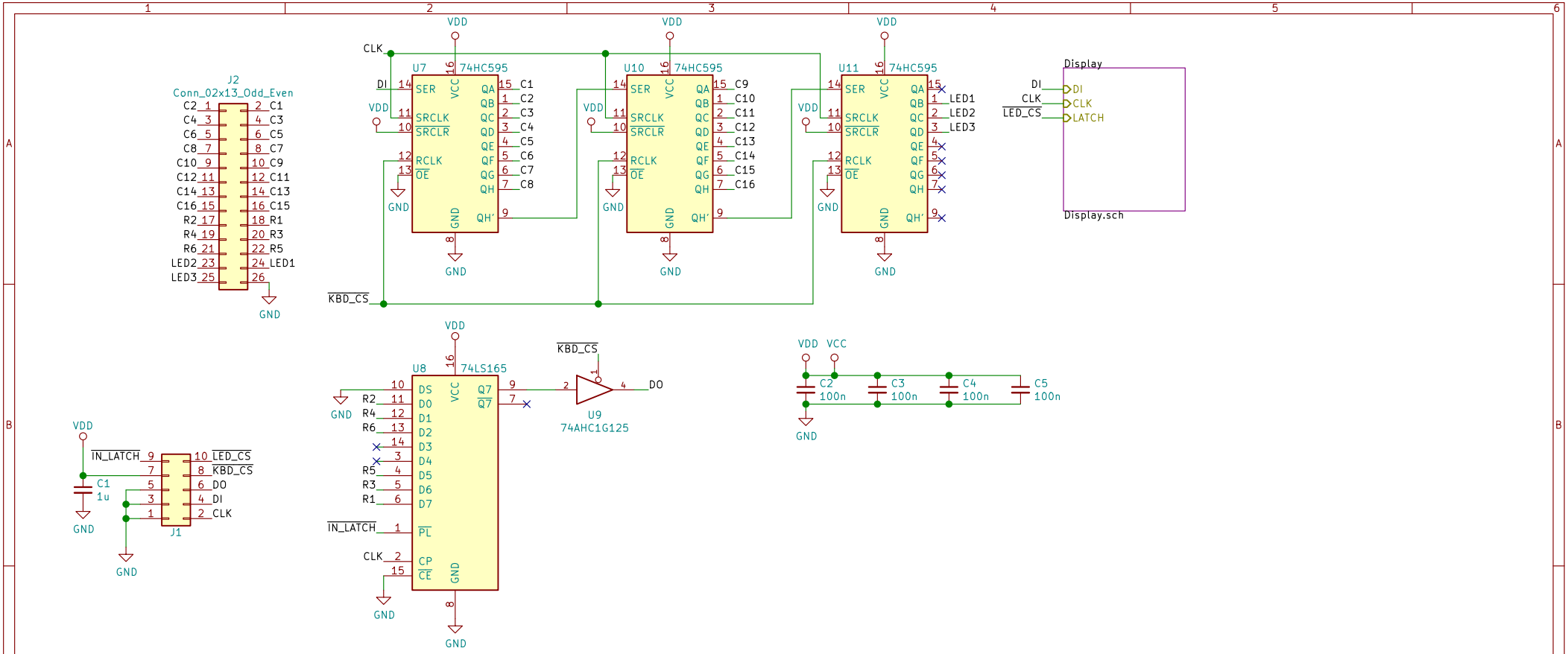

Licensed under CERN-OHL-P v2 or later

Robert Bicz

Sheet: /
File: led_display.sch

Title: 7 seg led display

Size: A4	Date: 2022-03-22	**Rev: 1**
KiCad E.D.A. kicad (5.1.0)-1		Id: 1/2

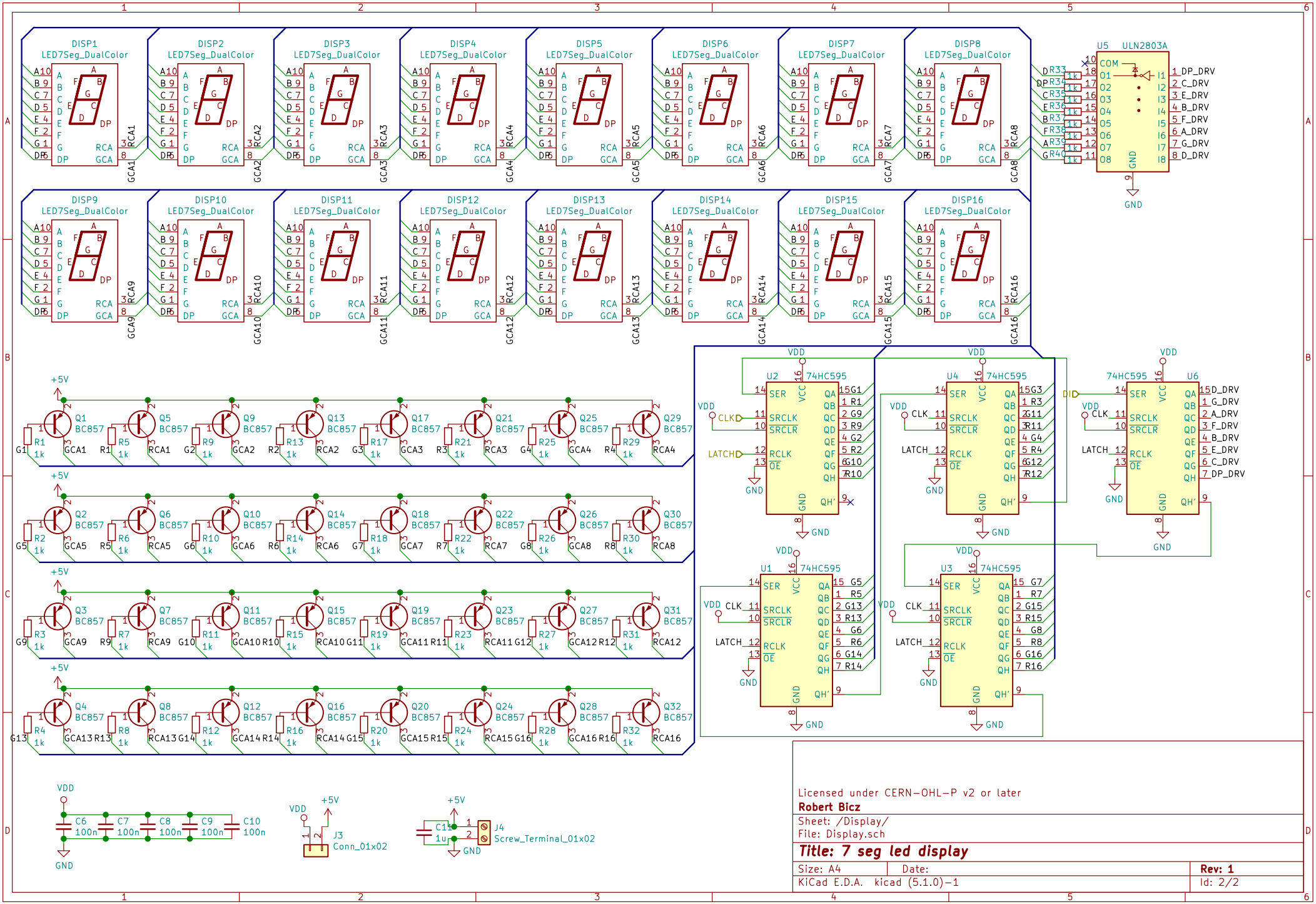

Licensed under CERN-OHL-P v2 or later

Robert Bicz

Sheet: /Display/
File: Display.sch

Title: 7 seg led display

Size: A4	Date:	**Rev: 1**
KiCad E.D.A. kicad (5.1.0)-1		Id: 2/2