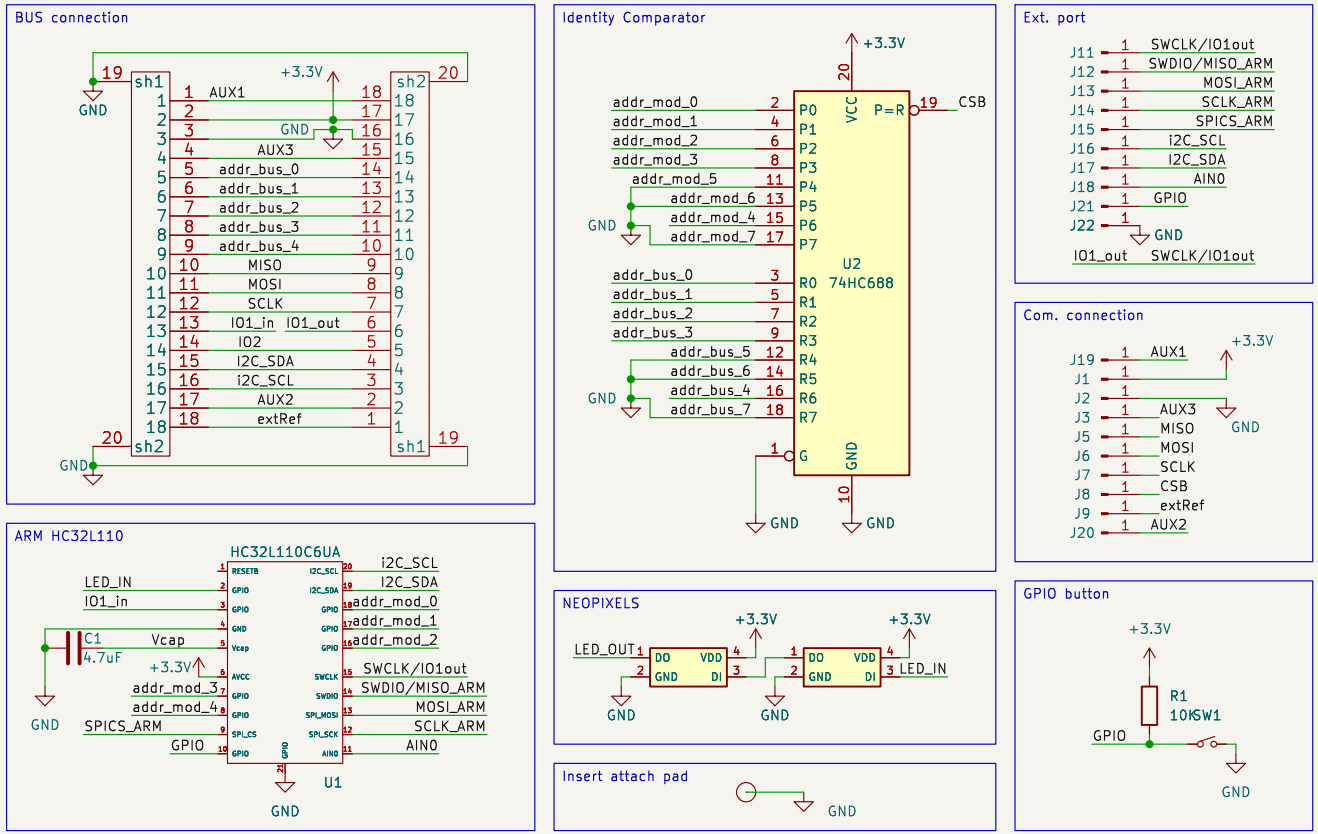

Aightech

Sheet: /

File: COM_MOD.kicad_sch

Title: CleverHand Communication Module

Size: A4	Date: 2023-12-27	**Rev: 1.0**
KiCad E.D.A. kicad-cli 7.0.10-7.0.10~ubuntu22.04.1		Id: 1/1