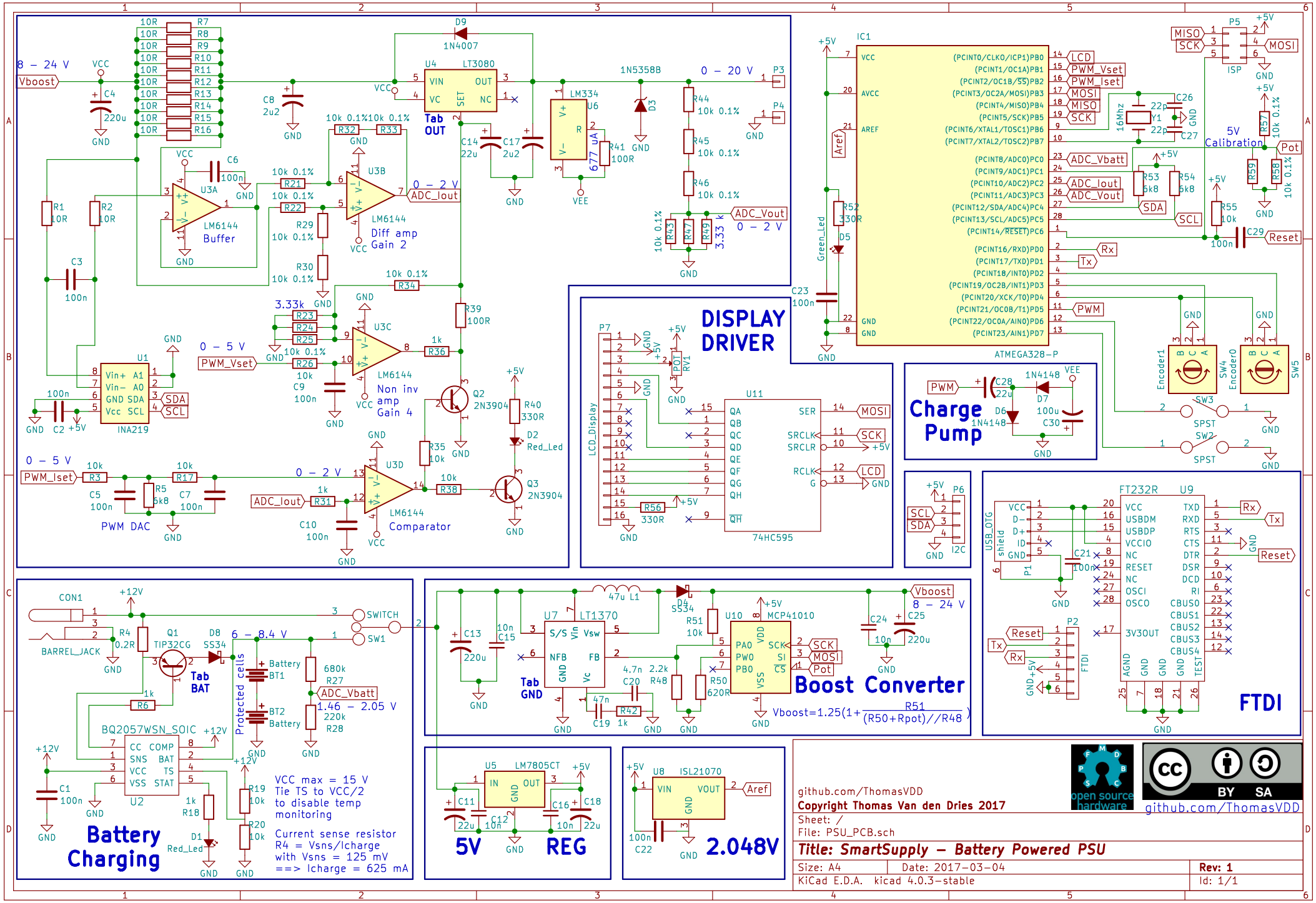
8 – 24 V
Vboost
LM6144
Buffer
Diff amp
Gain 2
Non inv
amp
Gain 4
Comparator
PWM DAC
INA219
LT3080
Tab
OUT
LM334
0 – 20 V
0 – 2 V
0 – 5 V
ADC_Iout
ADC_Vout
PWM_Vset
PWM_Iset
DISPLAY
DRIVER
74HC595
ATMEGA328-P
Charge
Pump
5V
Calibration
ISP
Encoder1
Encoder0
SPST
FT232R
FTDI
Boost Converter
Vboost=1.25(1+R51/((R50+Rpot)//R48))
Battery
Charging
BARREL_JACK
TIP32CG
BQ2057WSN_SOIC
Protected cells
6 – 8.4 V
1.46 – 2.05 V
VCC max = 15 V
Tie TS to VCC/2
to disable temp
monitoring
Current sense resistor
R4 = Vsns/Icharge
with Vsns = 125 mV
==> Icharge = 625 mA
LM7805CT
5V
REG
ISL21070
2.048V
github.com/ThomasVDD
Copyright Thomas Van den Dries 2017
Sheet: /
File: PSU_PCB.sch
Title: SmartSupply – Battery Powered PSU
Size: A4
Date: 2017-03-04
Rev: 1
KiCad E.D.A. kicad 4.0.3-stable
Id: 1/1