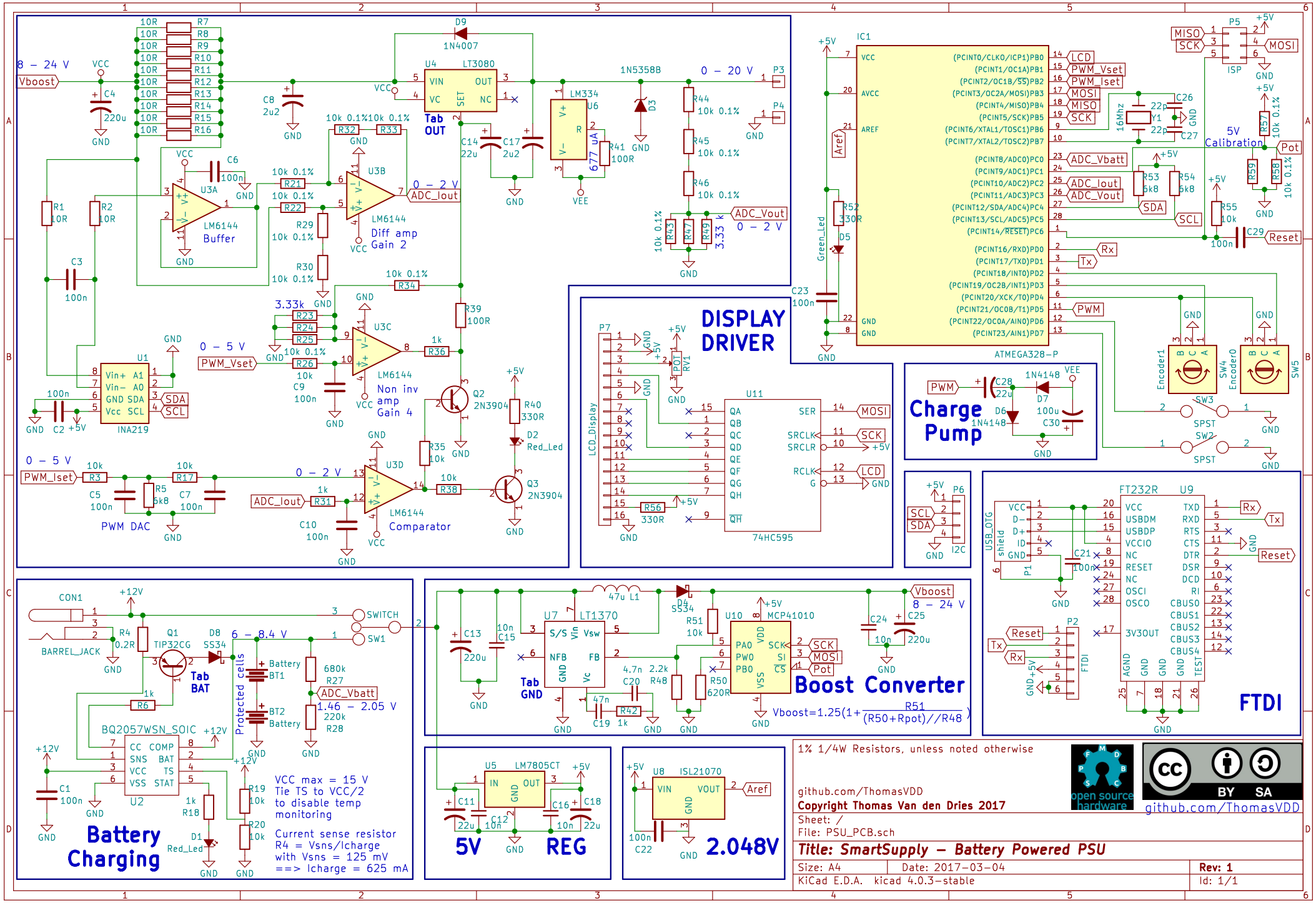
Buffer
Diff amp Gain 2
Non inv amp Gain 4
Comparator
PWM DAC
DISPLAY DRIVER
Charge Pump
Battery Charging
Boost Converter
FTDI
5V REG
2.048V
Tab OUT
Tab GND
Tab BAT
Protected cells
Vboost=1.25(1+R51/((R50+Rpot)//R48))
VCC max = 15 V
Tie TS to VCC/2
to disable temp
monitoring
Current sense resistor
R4 = Vsns/Icharge
with Vsns = 125 mV
==> Icharge = 625 mA
1% 1/4W Resistors, unless noted otherwise
github.com/ThomasVDD
Copyright Thomas Van den Dries 2017
Sheet: /
File: PSU_PCB.sch
Title: SmartSupply – Battery Powered PSU
Size: A4
Date: 2017-03-04
Rev: 1
KiCad E.D.A. kicad 4.0.3-stable
Id: 1/1