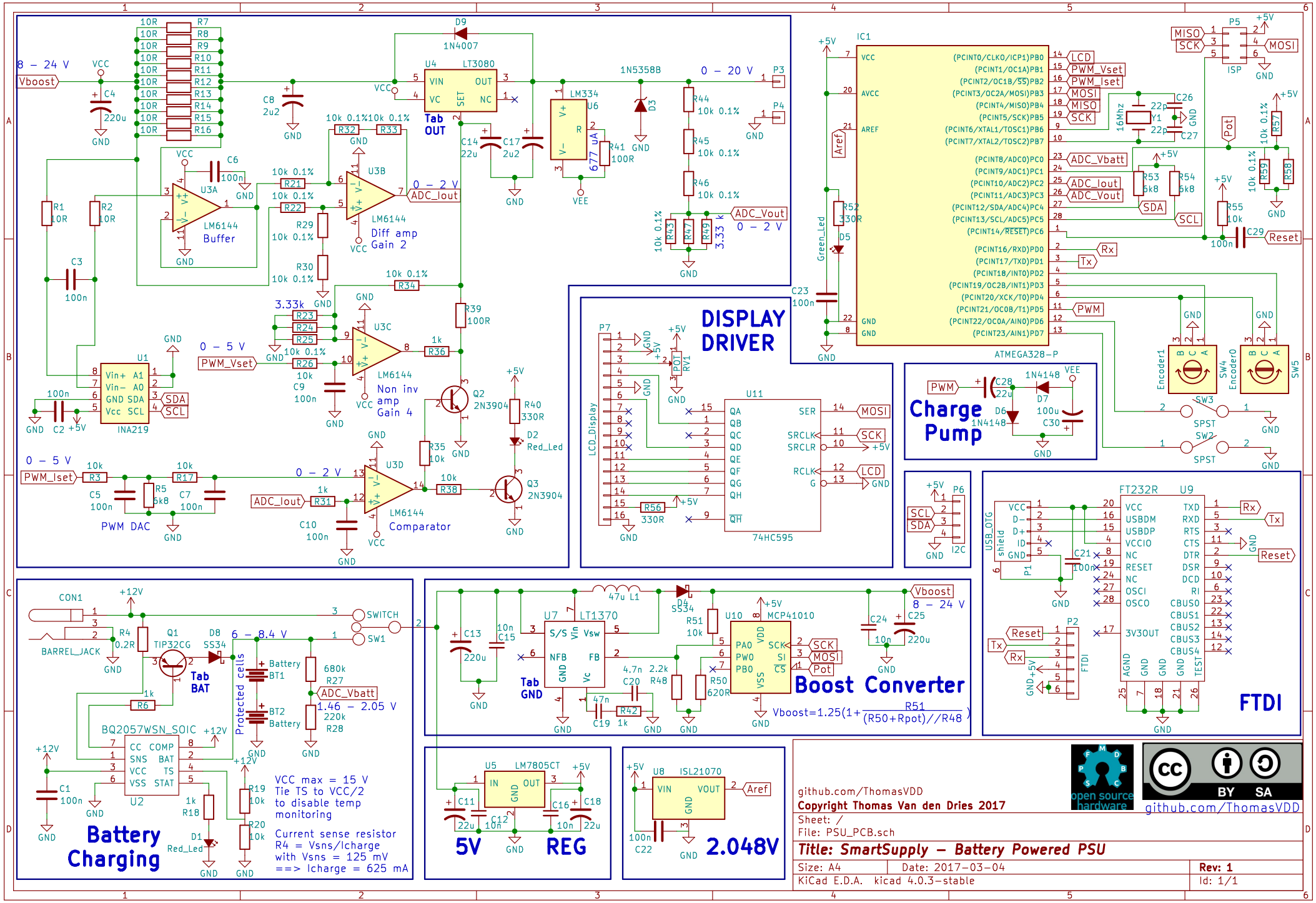
8 – 24 V
Vboost
VCC
C4
220u
GND
R7
R8
R9
R10
R11
R12
R13
R14
R15
R16
10R
C8
2u2
D9
1N4007
U4
LT3080
VIN
OUT
VC
SET
NC
Tab
OUT
C14
22u
C17
2u2
U6
LM334
677 uA
R41
100R
VEE
1N5358B
D3
0 – 20 V
P3
P4
R44
10k 0.1%
R45
10k 0.1%
R46
10k 0.1%
R43
R47
R49
3.33 k
ADC_Vout
0 – 2 V
R32
R33
10k 0.1%
U3B
LM6144
Diff amp
Gain 2
0 – 2 V
ADC_Iout
R21
R22
R29
R30
C6
100n
U3A
LM6144
Buffer
R1
10R
R2
10R
C3
100n
R34
R39
100R
3.33k
R23
R24
R25
U3C
LM6144
Non inv
amp
Gain 4
R36
1k
0 – 5 V
PWM_Vset
R26
10k
C9
100n
Q2
2N3904
R40
330R
D2
Red_Led
U1
INA219
Vin+ A1
Vin– A0
GND SDA
Vcc SCL
SDA
SCL
C2
+5V
0 – 5 V
PWM_Iset
R3
10k
R17
10k
C5
100n
R5
6k8
C7
100n
PWM DAC
0 – 2 V
ADC_Iout
R31
1k
C10
100n
U3D
LM6144
Comparator
R38
10k
Q3
2N3904
R35
10k
DISPLAY
DRIVER
P7
LCD_Display
POT
RV1
U11
74HC595
QA
QB
QC
QD
QE
QF
QG
QH
SER
SRCLK
SRCLR
RCLK
G
MOSI
SCK
LCD
R56
330R
IC1
ATMEGA328–P
VCC
AVCC
AREF
(PCINT0/CLKO/ICP1)PB0
(PCINT1/OC1A)PB1
(PCINT2/OC1B/SS)PB2
(PCINT3/OC2A/MOSI)PB3
(PCINT4/MISO)PB4
(PCINT5/SCK)PB5
(PCINT6/XTAL1/TOSC1)PB6
(PCINT7/XTAL2/TOSC2)PB7
(PCINT8/ADC0)PC0
(PCINT9/ADC1)PC1
(PCINT10/ADC2)PC2
(PCINT11/ADC3)PC3
(PCINT12/SDA/ADC4)PC4
(PCINT13/SCL/ADC5)PC5
(PCINT14/RESET)PC6
(PCINT16/RXD)PD0
(PCINT17/TXD)PD1
(PCINT18/INT0)PD2
(PCINT19/OC2B/INT1)PD3
(PCINT20/XCK/T0)PD4
(PCINT21/OC0B/T1)PD5
(PCINT22/OC0A/AIN0)PD6
(PCINT23/AIN1)PD7
LCD
PWM_Vset
PWM_Iset
MOSI
MISO
SCK
ADC_Vbatt
ADC_Iout
ADC_Vout
SDA
SCL
Rx
Tx
PWM
Reset
16Mhz
Y1
22p
C26
C27
R53
6k8
R54
6k8
R52
330R
D5
Green_Led
C23
100n
P5
ISP
Pot
R57
10k 0.1%
R59
R58
R55
10k
C29
100n
Encoder1
Encoder0
SW4
SW5
SW3
SPST
SW2
SPST
Charge
Pump
PWM
C28
22u
1N4148
D6
1N4148
D7
100u
C30
P6
I2C
SCL
SDA
FT232R
U9
USB_OTG
shield
P1
VCC
D–
D+
ID
GND
C21
100n
TXD
RXD
RTS
CTS
DTR
DSR
DCD
RI
CBUS0
CBUS1
CBUS2
CBUS3
CBUS4
USBDM
USBDP
VCCIO
NC
RESET
OSCI
OSCO
3V3OUT
AGND
TEST
P2
FTDI
FTDI
CON1
BARREL_JACK
R4
0.2R
Q1
TIP32CG
Tab
BAT
D8
SS34
6 – 8.4 V
Protected cells
Battery
BT1
BT2
Battery
SWITCH
SW1
680k
R27
ADC_Vbatt
1.46 – 2.05 V
220k
R28
R6
1k
BQ2057WSN_SOIC
U2
CC COMP
SNS BAT
VCC TS
VSS STAT
C1
100n
R18
1k
R19
10k
R20
10k
D1
Red_Led
VCC max = 15 V
Tie TS to VCC/2
to disable temp
monitoring
Current sense resistor
R4 = Vsns/Icharge
with Vsns = 125 mV
==> Icharge = 625 mA
Battery
Charging
47u L1
D4
SS34
U7
LT1370
S/S Vin Vsw
NFB FB
GND Vc
Tab
GND
C13
220u
10n
C15
4.7n
C20
2.2k
R48
47n
C19
R42
1k
R51
10k
R50
620R
U10
MCP41010
PA0 PW0 PB0
VDD SI CS VSS
SCK
MOSI
Pot
C24
10n
C25
220u
Vboost
8 – 24 V
Boost
Converter
Vboost=1.25(1+R51/(R50+Rpot)//R48)
U5
LM7805CT
IN OUT GND
C11
22u
C12
10n
C16
10n
C18
22u
5V
REG
U8
ISL21070
VIN VOUT GND
Aref
100n
C22
2.048V
github.com/ThomasVDD
Copyright Thomas Van den Dries 2017
open source hardware
BY SA
github.com/ThomasVDD
Sheet: /
File: PSU_PCB.sch
Title: SmartSupply – Battery Powered PSU
Size: A4
Date: 2017-03-04
Rev: 1
KiCad E.D.A. kicad 4.0.3-stable
Id: 1/1