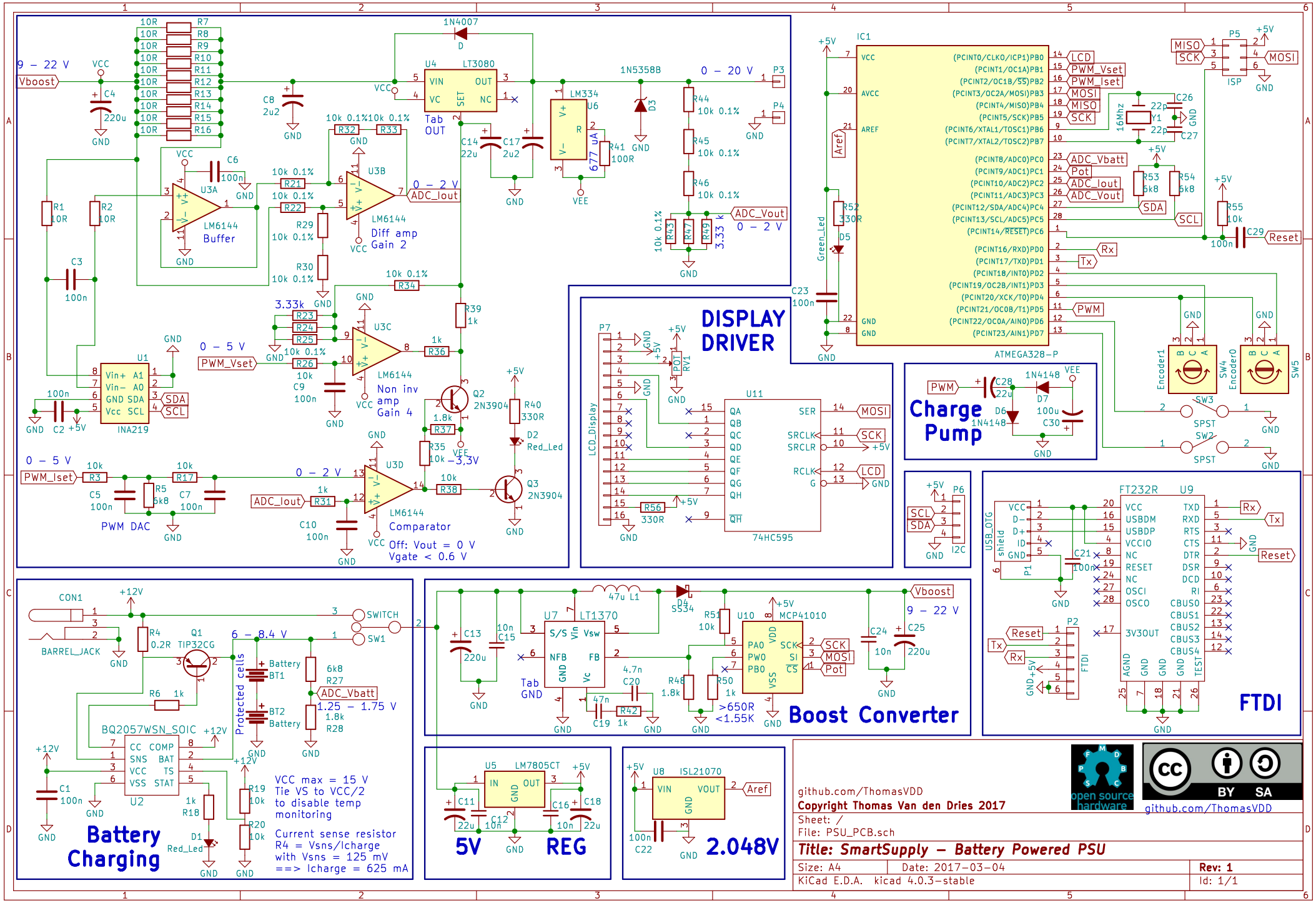
9 – 22 V
Vboost
U4 LT3080
Tab OUT
1N4007
1N5358B
0 – 20 V
P3
P4
LM334
U6
677 uA
R41 100R
ADC_Vout
0 – 2 V
U3B
LM6144
Diff amp
Gain 2
ADC_Iout
U3A
LM6144
Buffer
U3C
LM6144
Non inv amp
Gain 4
0 – 5 V
PWM_Vset
U1
INA219
SDA
SCL
PWM_Iset
PWM DAC
U3D
LM6144
Comparator
Off: Vout = 0 V
Vgate < 0.6 V
Q2 2N3904
Q3 2N3904
D2 Red_Led
DISPLAY DRIVER
P7
LCD_Display
U11
74HC595
MOSI
SCK
LCD
IC1
ATMEGA328-P
PWM
Rx
Tx
Reset
ADC_Vbatt
Pot
ADC_Iout
ADC_Vout
Green_Led
Aref
16Mhz
Y1
P5
ISP
MISO
MOSI
SCK
Encoder1
Encoder0
SW3
SW2
SPST
Charge Pump
1N4148
D6
D7
100u
C30
P6
I2C
FT232R
U9
USB_OTG
P1
P2
FTDI
3V3OUT
CON1
BARREL_JACK
Q1 TIP32CG
6 – 8.4 V
Protected cells
Battery
BT1
BT2
SWITCH
SW1
ADC_Vbatt
1.25 – 1.75 V
BQ2057WSN_SOIC
U2
VCC max = 15 V
Tie VS to VCC/2
to disable temp
monitoring
Current sense resistor
R4 = Vsns/Icharge
with Vsns = 125 mV
==> Icharge = 625 mA
Battery Charging
U7 LT1370
Tab GND
47u L1
D4 SS34
U10 MCP41010
>650R
<1.55K
Boost Converter
U5 LM7805CT
5V REG
U8 ISL21070
2.048V
github.com/ThomasVDD
Copyright Thomas Van den Dries 2017
Sheet: /
File: PSU_PCB.sch
Title: SmartSupply – Battery Powered PSU
Size: A4
Date: 2017-03-04
Rev: 1
KiCad E.D.A. kicad 4.0.3-stable
Id: 1/1