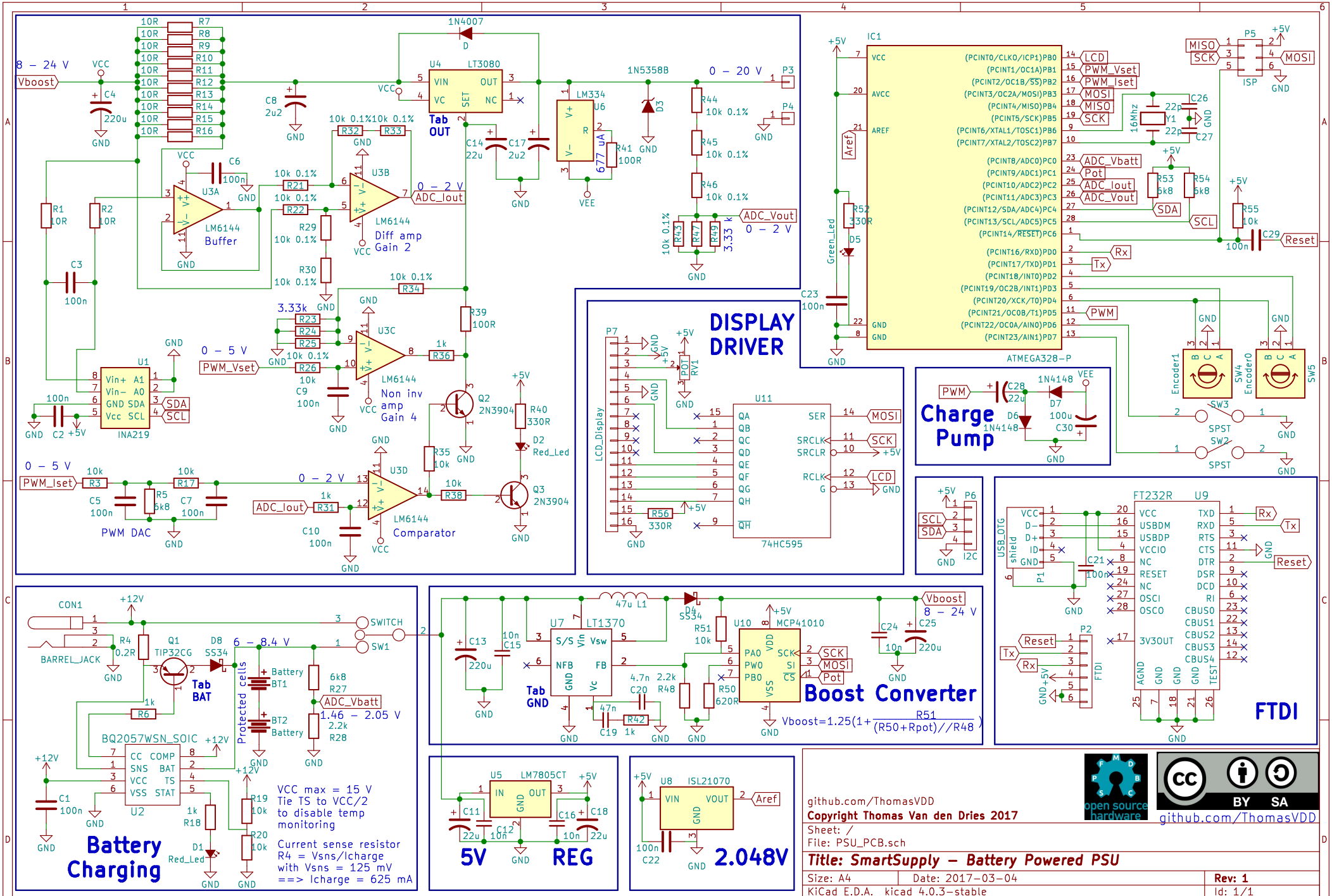

github.com/ThomasVDD
Copyright Thomas Van den Dries 2017
open source hardware
CC BY SA
github.com/ThomasVDD

Sheet: /
File: PSU_PCB.sch

Title: SmartSupply – Battery Powered PSU

Size: A4	Date: 2017-03-04	Rev: 1
KiCad E.D.A. kicad 4.0.3-stable		Id: 1/1